B.P.R. REG. NO.	STATE	PROJECT NUMBER	SHEET NO.	TOTAL SHEETS
1	MAINE	I-95-1(22)16	1	14

NEW HAMPSHIRE DEPARTMENT OF PUBLIC WORKS AND HIGHWAYS
MAINE STATE HIGHWAY COMMISSION

PISCATAQUA RIVER BRIDGE
INTERSTATE ROUTE 95
PROJECT NO. I-95-1 (22) 16

PORTSMOUTH, NEW HAMPSHIRE
COUNTY OF ROCKINGHAM
TO
KITTERY, MAINE
COUNTY OF YORK

LENGTH OF PROJECT 0.853 MILES
CONTRACT NO. 2 - MAINE APPROACH STRUCTURAL STEEL

SPECIFICATIONS

1. MAINE STATE HIGHWAY COMMISSION. REVISION OF JUNE, 1965
2. SPECIAL PROVISIONS.
3. SUPPLEMENTAL SPECIFICATIONS.

TRAFFIC

AADT 1990	38,580
DHV	6,560
T	1 %
D	70 %
V	70 MPH

SHEET	TITLE
1	COVER SHEET
2	GENERAL NOTES & QUANTITY SUMMARY
3	PROJECT PLAN AND ELEVATION
4	GENERAL PLAN AND ELEVATION
5	TYPICAL SECTION
6 - 8	FRAMING PLANS
9 - 10	STRINGERS
11	STRINGER DATA
12	SHOES AND LATERALS
13 - 14	STEEL DETAILS

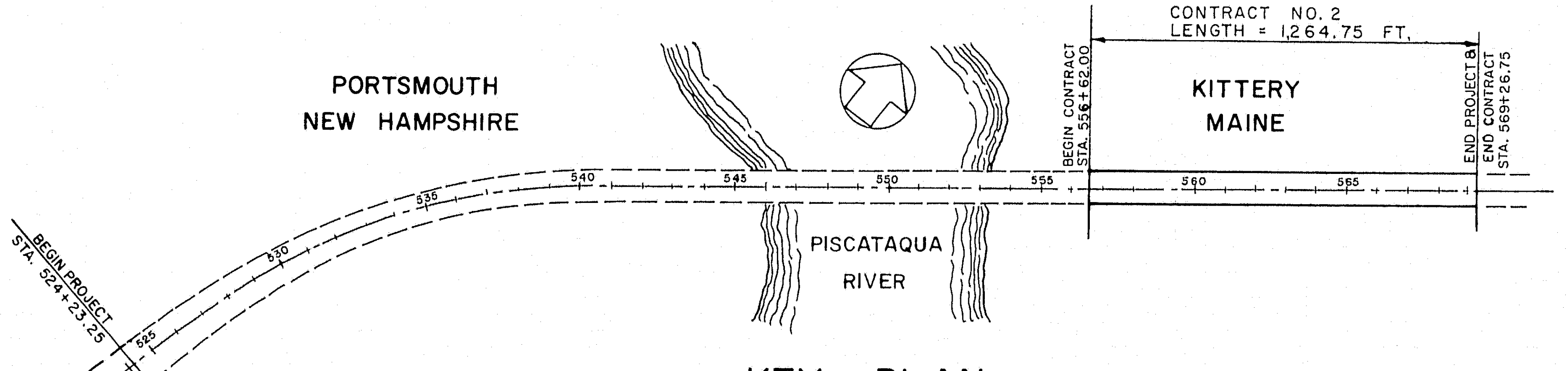
CONTRACT NO. 2
LENGTH = 1,264.75 FT.
PORTSMOUTH
NEW HAMPSHIRE
KITTERY
MAINE
BEGIN CONTRACT
STA. 556+62.00
END PROJECT &
END CONTRACT
STA. 569+26.75
BEGIN PROJECT
STA. 524+23.25
525
530
535
540
545
550
555
560
565
PISCATAQUA
RIVER

KEY PLAN

SCALE: 1"=400'

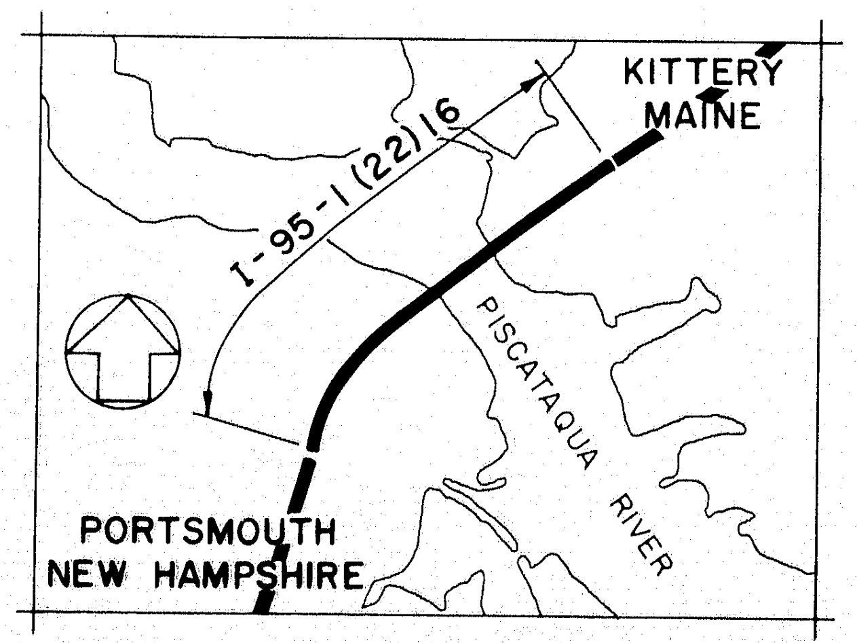
KITTERY
MAINE
I-95-1 (22) 16
PISCATAQUA RIVER
PORTSMOUTH
NEW HAMPSHIRE

LOCATION MAP

SCALE: 1"=2000'

APPROVED
NEW HAMPSHIRE DEPARTMENT OF
PUBLIC WORKS AND HIGHWAYS

John O. Morton
COMMISSIONER

DEPUTY COMMISSIONER AND CHIEF ENGINEER

SEPTEMBER 18, 1968
DATE

APPROVED
MAINE STATE HIGHWAY COMMISSION

David H. Stevens
CHAIRMAN

Sylvester L. Poor
CHIEF ENGINEER

OCTOBER 2, 1968
DATE

SYLVESTER L. POOR 187

PREPARED BY

HARDESTY & HANOVER
CONSULTING ENGINEERS
NEW YORK, NEW YORK

John J. Fiala

SEPTEMBER 10, 1968
DATE

AS BUILT
✓ 25 April '73 - JHW

DEPARTMENT OF TRANSPORTATION
FEDERAL HIGHWAY ADMINISTRATION
BUREAU OF PUBLIC ROADS
REGION 1

APPROVED

DIVISION ENGINEER
DATE

129-15

B. P. R. REG. NO.	STATE	PROJECT NUMBER	SHEET NO.	TOTAL SHEETS
1	MAINE	I-95-1(22)16	2	14

SPECIFICATIONS

THE FOLLOWING SPECIFICATIONS GOVERN THE DESIGN AND CONSTRUCTION OF THIS PROJECT:

DESIGN
- AMERICAN ASSOCIATION OF STATE HIGHWAY OFFICIALS, NINTH EDITION, 1965
  - STANDARD SPECIFICATIONS FOR HIGHWAY BRIDGES
- AMERICAN WELDING SOCIETY
  - SPECIFICATIONS FOR WELDED HIGHWAY AND RAILWAY BRIDGES AWS D2.0-66 AND SUPPLEMENTS

CONSTRUCTION
- STATE OF MAINE, STATE HIGHWAY COMMISSION
  - STANDARD SPECIFICATIONS - HIGHWAY AND BRIDGES REVISION OF JUNE 1965
  - SUPPLEMENTAL SPECIFICATIONS
  - SPECIAL PROVISIONS FOR THE PROJECT

DESIGN CRITERIA

DESIGN SPEED = 70 MPH
MINIMUM STOPPING SIGHT DISTANCE = 600 FEET
VERTICAL NAVIGATION CLEARANCE ABOVE MEAN HIGH WATER 135'-0"
LIVE LOAD

CASE I	AASHO HS-20-44 WITH ALLOWABLE UNIT STRESSES DETERMINED BY THE CRITERIA FOR FATIGUE
CASE II	AASHO HS-20-44 INCREASED BY 100% WITH ALLOWABLE UNIT STRESSES OF 150% OF BASIC STRESSES
CASE III	MILITARY TANDEM AXLE LOAD OF TWO 24,000 POUND AXLES SPACED 4'-0" APART WITH ALLOWABLE UNIT STRESSES EQUAL TO BASIC STRESSES

WIND LOAD
GIRDER SPANS 50 POUNDS PER SQUARE FOOT ON THE PROJECTED AREA OF THE SUPERSTRUCTURE

DIMENSIONS

ALL DIMENSIONS SHOWN IN PLAN VIEWS ARE HORIZONTAL AND AT A TEMPERATURE OF 45°F.

DESIGN STRESSES

BASIC STRESSES ARE AS FOLLOWS:
STRUCTURAL STEEL A36

TENSION	20,000 PSI
COMPRESSION (BEAMS)	$20{,}000 - 7.5\,(L/B)^2$ PSI
SHEAR (WEBS)	12,000 PSI
BOLTS (7/8" BOLTS IN SINGLE SHEAR) (FRICTION TYPE)	8,000 LBS. PER BOLT

STRUCTURAL STEEL

1. METAL IN THE SUPERSTRUCTURE SHALL CONFORM TO THE FOLLOWING ASTM SPECIFICATIONS:

STRINGERS	A36
DIAPHRAGMS	A36
SHOES	AS DETAILED ON PLANS
EXPANSION LINK BUSHINGS	B22 ALLOY E (MODIFIED)
EXPANSION JOINTS	A242 (CORROSION RESISTANT) (WELDABLE)
BOLTS	A325

2. TYPE OF FABRICATION

STRUCTURAL STEEL SHALL, IN GENERAL, BE SHOP WELDED AND SHOP AND FIELD BOLTED USING HIGH STRENGTH BOLTS.

3. BOLTS

BOLTS SHALL BE 7/8" DIAMETER A325 BOLTS. MINIMUM BOLT SPACING SHALL BE 3" CENTER TO CENTER

4. CAMBER

STRINGERS SHALL BE CAMBERED FOR FULL DEAD LOAD PLUS VERTICAL CURVE.

5. PAINTING

THE STRUCTURAL STEEL SHALL BE GIVEN ONE SHOP COAT OF PAINT AND ONE TOUCH-UP COAT OF PAINT IN THE FIELD.

STRUCTURAL STEEL ADJACENT TO EXPANSION JOINTS AND BELOW DECK LEVEL SHALL BE PAINTED WITH ONE COAT OF ZINC RICH EPOXY COATING.

QUANTITY SUMMARY

ITEM NO.	DESCRIPTION	UNIT
504.701	STRUCTURAL STEEL, FABRICATED AND DELIVERED	L.S.
504.711	STRUCTURAL STEEL, ERECTION	L.S.

STRUCTURAL STEEL BREAKDOWN (POUNDS)

ITEM 504.701 STRUCTURAL STEEL, FABRICATED AND DELIVERED

	A36	A242 CORROSION RESISTANT	SPECIAL
STRINGERS	3,907,000		
BRACING & DIAPHRAGMS	398,000		
SHOES	49,000		63,000
EXPANSION JOINTS	24,000	105,000	14,000
SUB-TOTAL	4,378,000	105,000	77,000
TOTAL	4,560,000		

ITEM 504.711 STRUCTURAL STEEL, ERECTION	
STRINGERS	3,683,000
BRACING & DIAPHRAGMS	377,000
SHOES	112,000
EXPANSION JOINTS	134,000
TOTAL	4,306,000

2

DESIGN —
TRACE — m. Dentzi
CHECK — S.S. Nishimura

BRIDGE NO.
IN CHARGE OF — R.W. Christie

NEW HAMPSHIRE
DEPARTMENT OF PUBLIC WORKS AND HIGHWAYS
AND
MAINE STATE HIGHWAY COMMISSION
INTERSTATE 95 BRIDGE
OVER
PISCATAQUA RIVER
BETWEEN
PORTSMOUTH, NEW HAMPSHIRE AND KITTERY, MAINE

HARDESTY & HANOVER
CONSULTING ENGINEERS
NEW YORK, N. Y.

GENERAL NOTES
QUANTITY SUMMARY

SHEET 2 OF 14

129-16

B. P. R. REG. NO.	STATE	PROJECT NUMBER	SHEET NO.	TOTAL SHEETS
1	MAINE	I-95-1(22)16	3	14

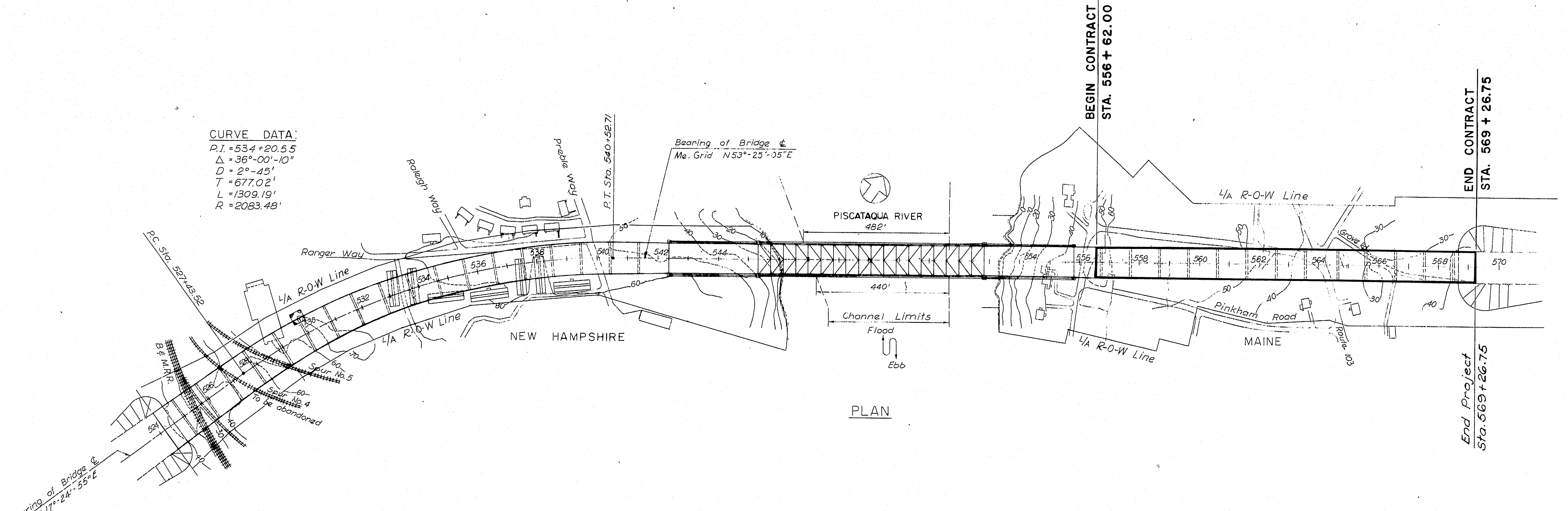
CURVE DATA:
P.I. = 534+20.55
Δ = 36°-00'-10"
D = 2°-45'
T = 677.02'
L = 1309.19'
R = 2083.48'
Raleigh Way
Preble Way
P.T. Sta. 540+52.71
Bearing of Bridge ℄
Me. Grid N53°-25'-05"E
PISCATAQUA RIVER
482'
440'
Channel Limits
Flood
Ebb
BEGIN CONTRACT
STA. 556 + 62.00
END CONTRACT
STA. 569 + 26.75
L/A R-O-W Line
Ranger Way
P.C. Sta. 527+43.52
B.&M.R.R.
Spur No. 5
Spur No. 4
To be abandoned
NEW HAMPSHIRE
MAINE
Pinkham Road
Grove Rd.
Route 103
End Project
Sta. 569+26.75
Bearing of Bridge ℄
N 17°-24'-55"E
524
526
528
530
532
534
536
538
540
542
544
554
556
558
560
562
564
566
568
570

PLAN

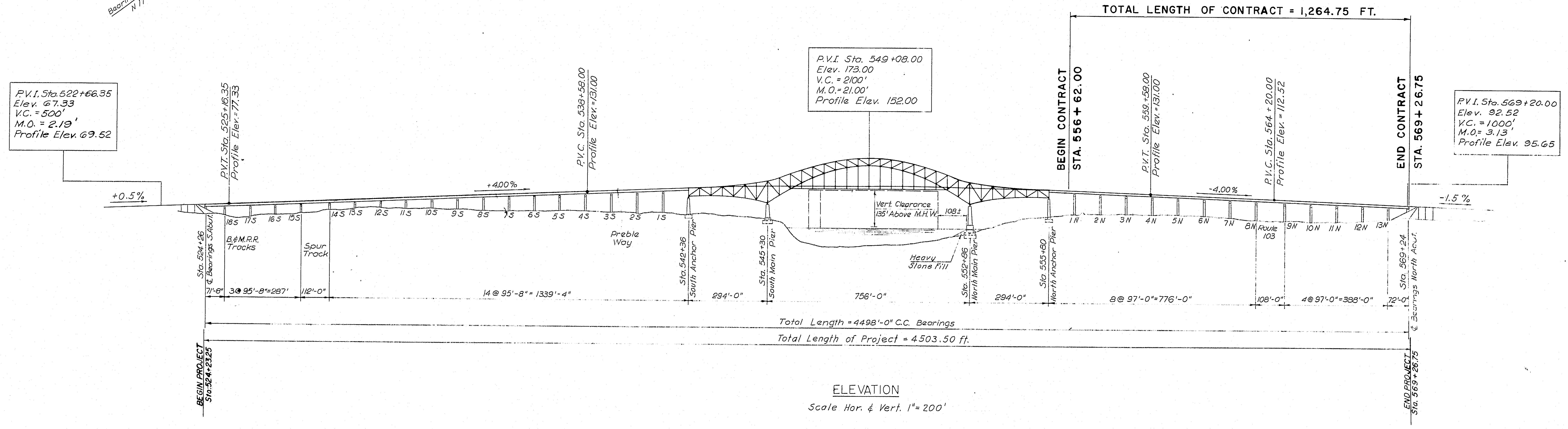
TOTAL LENGTH OF CONTRACT = 1,264.75 FT.
P.V.I. Sta. 522+66.35
Elev. 67.33
V.C. = 500'
M.O. = 2.19'
Profile Elev. 69.52
P.V.T. Sta. 525+16.35
Profile Elev. = 77.33
P.V.C. Sta. 538+58.00
Profile Elev. = 131.00
P.V.I. Sta. 549+08.00
Elev. 173.00
V.C. = 2100'
M.O. = 21.00'
Profile Elev. 152.00
BEGIN CONTRACT
STA. 556 + 62.00
P.V.T. Sta. 559+58.00
Profile Elev. = 131.00
P.V.C. Sta. 564+20.00
Profile Elev. = 112.52
END CONTRACT
STA. 569 + 26.75
P.V.I. Sta. 569+20.00
Elev. 92.52
V.C. = 1000'
M.O. = 3.13'
Profile Elev. 95.65
+0.5%
+4.00%
-4.00%
-1.5%
18S 17S 16S 15S 14S 13S 12S 11S 10S 9S 8S 7S 6S 5S 4S 3S 2S 1S
1N 2N 3N 4N 5N 6N 7N 8N 9N 10N 11N 12N 13N
Sta. 524+26
℄ Bearings S. Abut.
B.&M.R.R. Tracks
Spur Track
Preble Way
Vert. Clearance
135' Above M.H.W.
108±
Heavy Stone Fill
Route 103
Sta. 542+36 South Anchor Pier
Sta. 545+30 South Main Pier
Sta. 552+86 North Main Pier
Sta. 555+80 North Anchor Pier
Sta. 569+24 ℄ Bearings North Abut.
71'-8"
3@95'-8"=287'
112'-0"
14@95'-8"=1339'-4"
294'-0"
756'-0"
294'-0"
8@97'-0"=776'-0"
108'-0"
4@97'-0"=388'-0"
72'-0"
Total Length = 4498'-0" C.C. Bearings
Total Length of Project = 4503.50 ft.
BEGIN PROJECT
Sta. 524+23.25
END PROJECT
Sta. 569+26.75

ELEVATION

Scale Hor. & Vert. 1" = 200'

2

DESIGN —
TRACE — S. Bradford
CHECK — R.W. Christie

BRIDGE NO.
IN CHARGE OF — R.W. Christie

NEW HAMPSHIRE
DEPARTMENT OF PUBLIC WORKS AND HIGHWAYS
AND
MAINE STATE HIGHWAY COMMISSION
INTERSTATE 95 BRIDGE
OVER
PISCATAQUA RIVER
BETWEEN
PORTSMOUTH, NEW HAMPSHIRE AND KITTERY, MAINE

HARDESTY & HANOVER
CONSULTING ENGINEERS
NEW YORK, N.Y.

PROJECT
PLAN AND ELEVATION

SHEET 3 OF 14

129-17

B. P. R. REG. NO.	STATE	PROJECT NUMBER	SHEET NO.	TOTAL SHEETS
1	MAINE	I-95-1(22)16	3	14

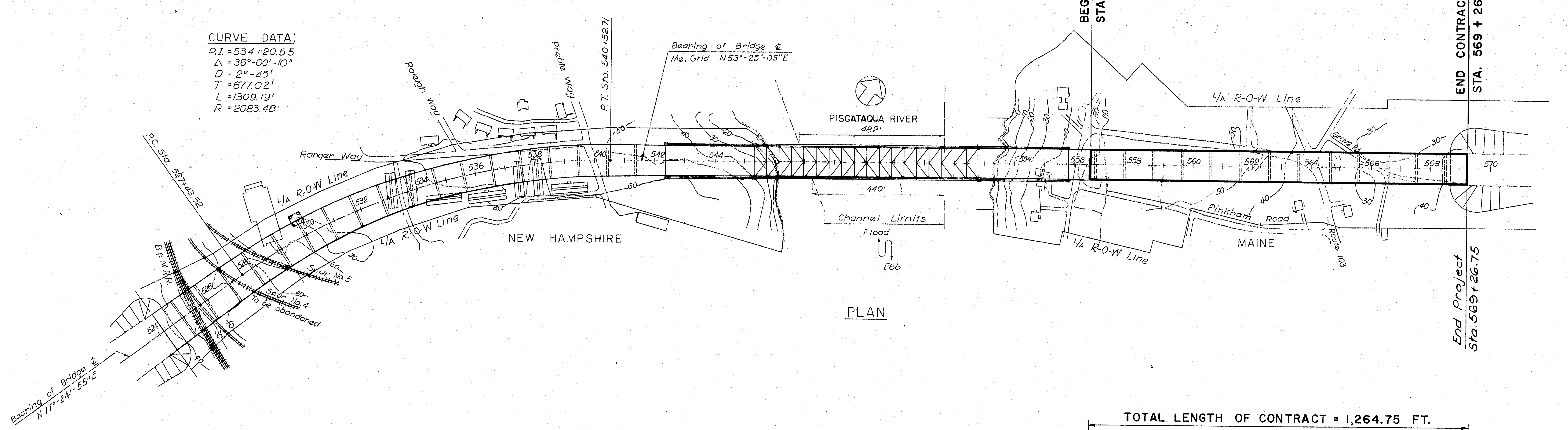

CURVE DATA:
P.I. = 534+20.55
Δ = 36°-00'-10"
D = 2°-45'
T = 677.02'
L = 1309.19'
R = 2083.48'
P.C. Sta. 527+43.52
P.T. Sta. 540+52.71
Bearing of Bridge ℄
Me. Grid N53°-25'-05"E
Bearing of Bridge ℄
N 17°-24'-55"E
Ranger Way
Raleigh Way
Preble Way
L/A R-O-W Line
L/A R-O-W Line
NEW HAMPSHIRE
B.&M.R.R.
Spur No. 5
Spur No. 4
To be abandoned
PISCATAQUA RIVER
482'
440'
Channel Limits
Flood
Ebb
BEGIN CONTRACT
STA. 556 + 62.00
END CONTRACT
STA. 569 + 26.75
L/A R-O-W Line
L/A R-O-W Line
Grove Rd.
Pinkham Road
Route 103
MAINE
End Project
Sta. 569+26.75
524
526
528
530
532
534
536
538
540
542
544
554
556
558
560
562
564
566
568
570

PLAN

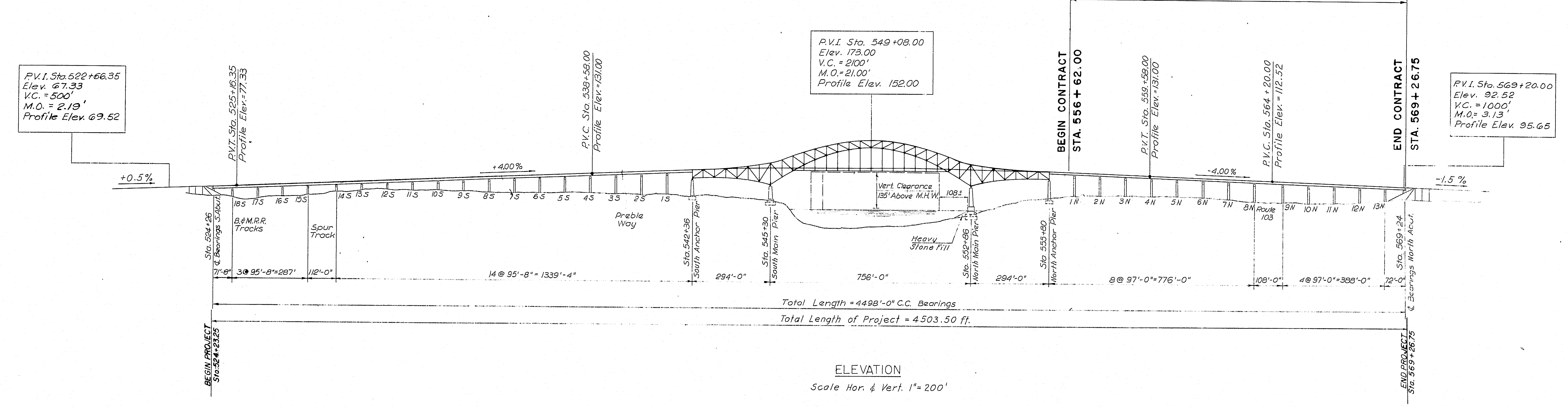

TOTAL LENGTH OF CONTRACT = 1,264.75 FT.
P.V.I. Sta. 522+66.35
Elev. 67.33
V.C. = 500'
M.O. = 2.19'
Profile Elev. 69.52
+0.5%
P.V.T. Sta. 525+16.35
Profile Elev. = 77.33
P.V.C. Sta. 538+58.00
Profile Elev. = 131.00
+4.00%
P.V.I. Sta. 549+08.00
Elev. 173.00
V.C. = 2100'
M.O. = 21.00'
Profile Elev. 152.00
BEGIN CONTRACT
STA. 556 + 62.00
P.V.T. Sta. 559+58.00
Profile Elev. = 131.00
-4.00%
P.V.C. Sta. 564+20.00
Profile Elev. = 112.52
END CONTRACT
STA. 569 + 26.75
P.V.I. Sta. 569+20.00
Elev. 92.52
V.C. = 1000'
M.O. = 3.13'
Profile Elev. 95.65
-1.5%
18S 17S 16S 15S 14S 13S 12S 11S 10S 9S 8S 7S 6S 5S 4S 3S 2S 1S
1N 2N 3N 4N 5N 6N 7N 8N 9N 10N 11N 12N 13N
Sta. 524+26
℄ Bearings S. Abut.
B.&M.R.R. Tracks
Spur Track
Preble Way
Sta. 542+36
South Anchor Pier
Sta. 545+30
South Main Pier
Vert. Clearance
135' Above M.H.W.
108±
Heavy Stone Fill
Sta. 552+86
North Main Pier
Sta. 555+80
North Anchor Pier
Route 103
Sta. 569+24
℄ Bearings North Abut.
71'-8"
3@ 95'-8" = 287'
112'-0"
14 @ 95'-8" = 1339'-4"
294'-0"
756'-0"
294'-0"
8 @ 97'-0" = 776'-0"
108'-0"
4 @ 97'-0" = 388'-0"
72'-0"
Total Length = 4498'-0" C.C. Bearings
Total Length of Project = 4503.50 ft.
BEGIN PROJECT
Sta. 524+23.25
END PROJECT
Sta. 569+26.75

ELEVATION

Scale Hor. & Vert. 1" = 200'

2

DESIGN —
TRACE — S. Bradford
CHECK — R.W. Christie

BRIDGE NO.
IN CHARGE OF — R.W. Christie

NEW HAMPSHIRE
DEPARTMENT OF PUBLIC WORKS AND HIGHWAYS
AND
MAINE STATE HIGHWAY COMMISSION
INTERSTATE 95 BRIDGE
OVER
PISCATAQUA RIVER
BETWEEN
PORTSMOUTH, NEW HAMPSHIRE AND KITTERY, MAINE

HARDESTY & HANOVER
CONSULTING ENGINEERS
NEW YORK, N. Y.

PROJECT
PLAN AND ELEVATION

SHEET 3 OF 14

129-17

B. P. R. REG. NO.	STATE	PROJECT NUMBER	SHEET NO.	TOTAL SHEETS
1	MAINE	I-95-1(22)16	4	14

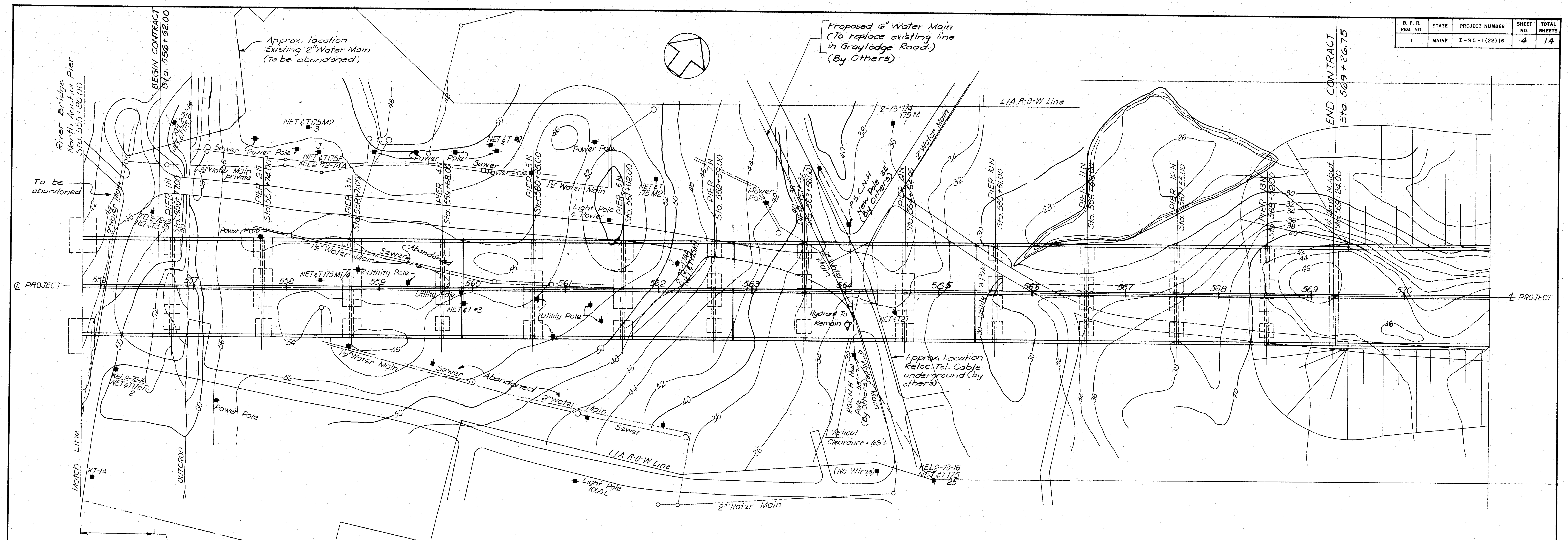
River Bridge North Anchor Pier Sta. 555+80.00
BEGIN CONTRACT Sta. 556+62.00
Approx. location Existing 2" Water Main (To be abandoned)
Proposed 6" Water Main (To replace existing line in Graylodge Road.) (By Others)
L/A R-O-W Line
END CONTRACT Sta. 569+26.75
To be abandoned
2" Water Main
Sewer
Power Pole
NET & T 175 M2 3
NET & T 175 F
KEL 2-72-14A
KEL 2-72-14 NET & T 175 F
KEL 2-72-13 NET & T 3
1½" Water Main private
1½" Water Main
Abandoned
Utility Pole
NET & T 175 M1/4
NET & T #3
NET & T #2
Light Pole & Power
NET & T 175 M2
2-73-17AA NET & T 175 M
2-73-174 175 M
P.S.C.N.H. New Pole 35' (By Others)
2" Water Main
Hydrant To Remain
NET & T 27
Utility Pole
PIER 1N Sta. 556+77.00
PIER 2N Sta. 557+74.00
PIER 3N Sta. 558+71.00
PIER 4N Sta. 559+68.00
PIER 5N Sta. 560+65.00
PIER 6N Sta. 561+62.00
PIER 7N Sta. 562+59.00
PIER 8N Sta. 563+56.00
PIER 9N Sta. 564+64.00
PIER 10N Sta. 565+61.00
PIER 11N Sta. 566+58.00
PIER 12N Sta. 567+55.00
PIER 13N Sta. 568+52.00
℄ Bridge N. Abut. Sta. 569+24.00
℄ PROJECT
556
557
558
559
560
561
562
563
564
565
566
567
568
569
570
℄ PROJECT
Approx. Location Reloc. Tel. Cable underground (by others)
P.S.C.N.H. New Pole - 35' (By Others)
Vertical Clearance = 68'±
(No Wires)
KEL 2-73-16 NET & T 175 25
KEL 2-72-13 NET & T 175 K 2
Power Pole
Sewer Abandoned 2" Water Main
Sewer
L/A R-O-W Line
Light Pole 1000 L
2" Water Main
KT-1A
Match Line
OUTCROP

PLAN

Note:
All construction, relocation, and abandoning of utilities shall be performed by Others.

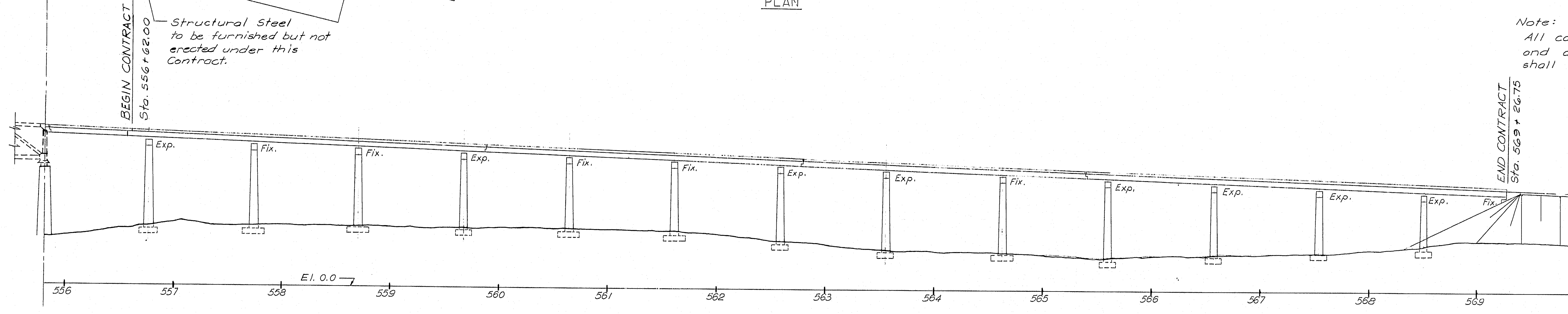
BEGIN CONTRACT Sta. 556+62.00
Exp.
Fix.
Fix.
Exp.
Fix.
Fix.
Exp.
Exp.
Fix.
Exp.
Exp.
Exp.
Exp.
Fix.
END CONTRACT Sta. 569+26.75
El. 0.0
556
557
558
559
560
561
562
563
564
565
566
567
568
569
570

Structural Steel to be furnished but not erected under this Contract.

ELEVATION

Scale Horiz. & Vert.: 1" = 50'

2

DESIGN —
TRACE — J. Bradford
CHECK — H. R. Cattley + R. W. Christie

BRIDGE NO.
IN CHARGE OF — R. W. Christie

NEW HAMPSHIRE
DEPARTMENT OF PUBLIC WORKS AND HIGHWAYS
AND
MAINE STATE HIGHWAY COMMISSION
INTERSTATE 95 BRIDGE
OVER
PISCATAQUA RIVER
BETWEEN
PORTSMOUTH, NEW HAMPSHIRE AND KITTERY, MAINE

HARDESTY & HANOVER
CONSULTING ENGINEERS
NEW YORK, N. Y.

GENERAL PLAN & ELEVATION
STA. 555+80 - STA. 569+24

SHEET 4 OF 14

129-18

B. P. R. REG. NO.	STATE	PROJECT NUMBER	SHEET NO.	TOTAL SHEETS
1	MAINE	I-95-1(22)16	5	14

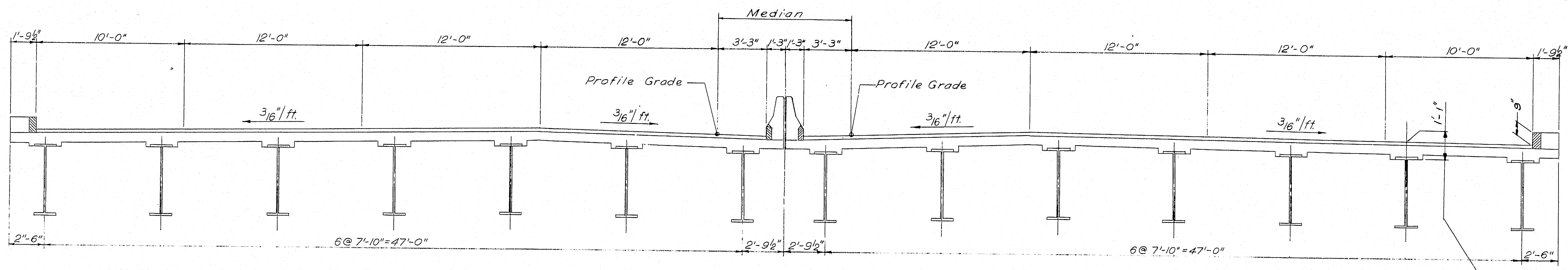
Median
1'-9½"
10'-0"
12'-0"
12'-0"
12'-0"
3'-3"
1'-3"
1'-3"
3'-3"
12'-0"
12'-0"
12'-0"
10'-0"
1'-9½"
Profile Grade
Profile Grade
3/16"/ft.
3/16"/ft.
3/16"/ft.
3/16"/ft.
1'-1"
9"
2"-6"
6@ 7'-10"=47'-0"
2'-9½"
2'-9½"
6@ 7'-10"=47'-0"
2'-6"
Top of stringer web to
top of wearing surface

TYPICAL SECTION

Scale: ¼" = 1'-0"

(DECK, MEDIAN BARRIER, AND BRUSH CURBS
ARE NOT PART OF THIS CONTRACT)

2

DESIGN —
TRACE — C. Janszewski
CHECK — S.S. Nishimura

BRIDGE NO.
IN CHARGE OF — R.W. Christie

NEW HAMPSHIRE
DEPARTMENT OF PUBLIC WORKS AND HIGHWAYS
AND
MAINE STATE HIGHWAY COMMISSION
INTERSTATE 95 BRIDGE
OVER
PISCATAQUA RIVER
BETWEEN
PORTSMOUTH, NEW HAMPSHIRE AND KITTERY, MAINE

HARDESTY & HANOVER
CONSULTING ENGINEERS
NEW YORK, N. Y.

TYPICAL SECTION

SHEET 5 OF 14

129-19

B. P. R. REG. NO.	STATE	PROJECT NUMBER	SHEET NO.	TOTAL SHEETS
1	MAINE	I-95-I(22)16	6	14

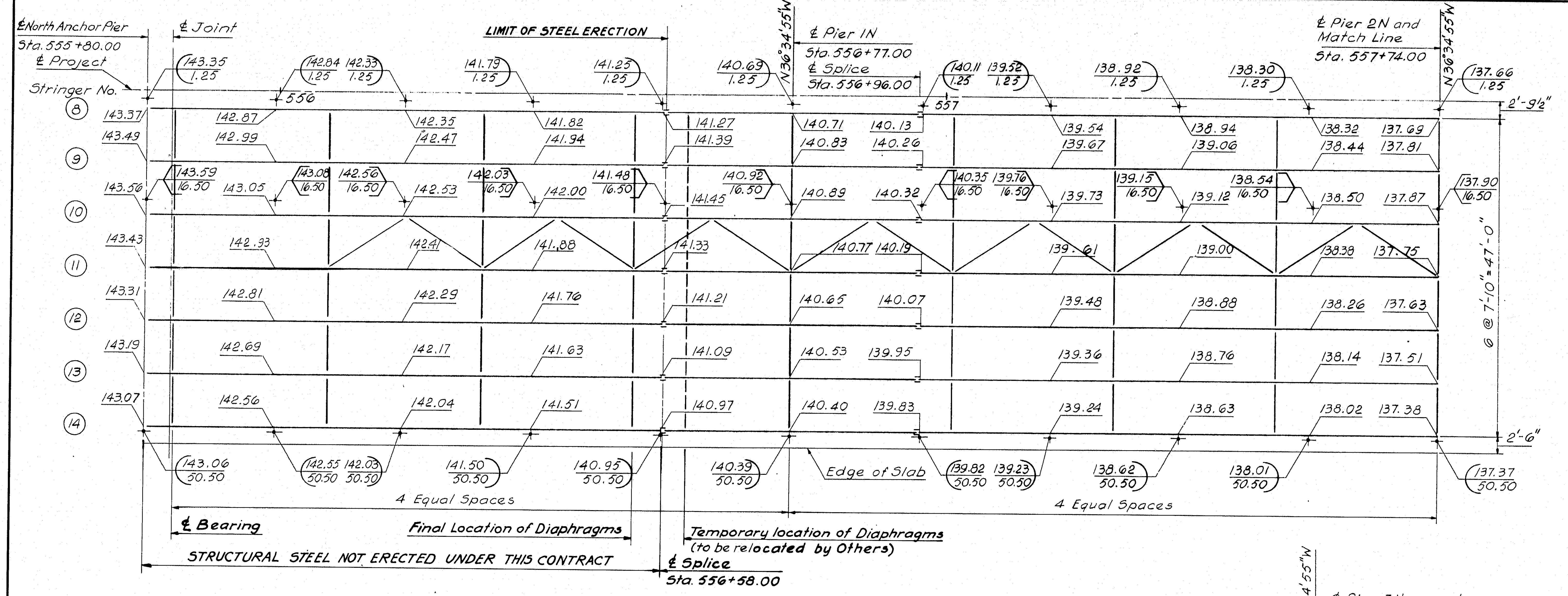

℄ North Anchor Pier
Sta. 555+80.00
℄ Project
℄ Joint
LIMIT OF STEEL ERECTION
℄ Pier 1N
Sta. 556+77.00
℄ Splice
Sta. 556+96.00
℄ Pier 2N and
Match Line
Sta. 557+74.00
N 36° 34' 55" W
Stringer No.
8
9
10
11
12
13
14
556
557
2'-9½"
2'-6"
6 @ 7'-10" = 47'-0"
Edge of Slab
4 Equal Spaces
4 Equal Spaces
℄ Bearing
Final Location of Diaphragms
Temporary location of Diaphragms
(to be relocated by Others)
STRUCTURAL STEEL NOT ERECTED UNDER THIS CONTRACT
℄ Splice
Sta. 556+58.00

NOTE:
Elevations given are for top of wearing surface.
Vertical distance from top of wearing surface to the top of stringer web is 1'-1".
Elevations are given for 5th points of stringer spans except in span adjacent to abutment, where elevations are given for 4th points.

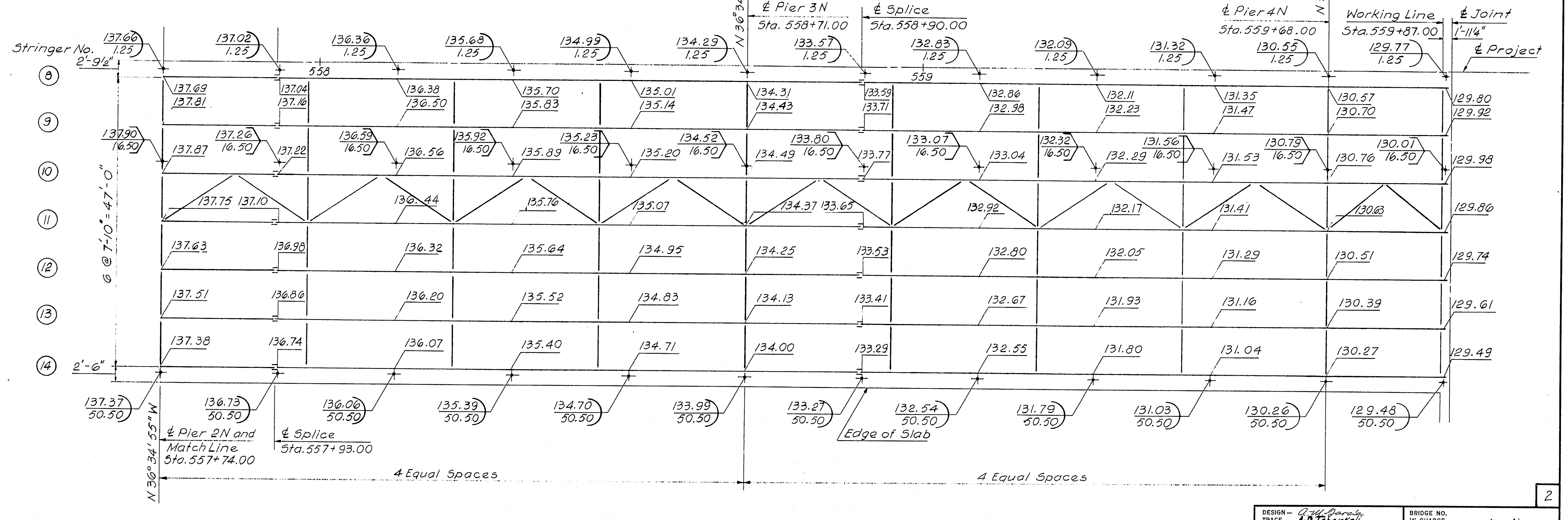

Stringer No.
2'-9½"
8
9
10
11
12
13
14
2'-6"
6 @ 7'-10" = 47'-0"
558
559
℄ Pier 3N
Sta. 558+71.00
℄ Splice
Sta. 558+90.00
℄ Pier 4N
Sta. 559+68.00
Working Line
Sta. 559+87.00
℄ Joint
1'-11¼"
℄ Project
N 36° 34' 55" W
℄ Pier 2N and
Match Line
Sta. 557+74.00
℄ Splice
Sta. 557+93.00
Edge of Slab
4 Equal Spaces
4 Equal Spaces

STRINGER NUMBER	WEB PLATE	FLANGES							
		Sta. 555+80.00 to Sta. 556+58.00	Sta. 556+58.00 to Sta. 556+96.00	Sta. 556+96.00 to Sta. 557+55.00	Sta. 557+55.00 to Sta 557+93.00	Sta. 557+93.00 to Sta 558+52.00	Sta. 558+52.00 to Sta. 558+90.00	Sta. 558+90.00 to Sta. 559+49.00	Sta. 559+49.00 to Sta. 559+88.79
1-14	54×7/16 54×1/2	16 × 1 1/8	16 × 1 5/8	16 × 3/4	16 × 1 3/8	16 × 3/4	16 × 1 1/2	16 × 3/4	16 × 1 1/4
		Stringer Type "G"		Stringer Type "B-1"		Stringer Type "B-1"		Stringer Type "F-1"	

Exp. Joint — Splice — Splice — Splice — Splice — Exp. Joint

LEGEND:

131.79 ← Gutter Elevation
50.50 ← Gutter Offset
133.07 ← High Point Elevation
16.50 ← High Point Offset

2

DESIGN – A.M. Garcia
TRACE – A.D. Tchenkeli
CHECK – B. Rak A.M. Garcia

BRIDGE NO. IN CHARGE OF – R.W. Christie

NEW HAMPSHIRE
DEPARTMENT OF PUBLIC WORKS AND HIGHWAYS
AND
MAINE STATE HIGHWAY COMMISSION
INTERSTATE 95 BRIDGE
OVER
PISCATAQUA RIVER
BETWEEN
PORTSMOUTH, NEW HAMPSHIRE AND KITTERY, MAINE
MAINE APPROACH
FRAMING PLAN
STA. 555 + 80 TO STA. 559 + 87
SHEET 6 OF 14

HARDESTY & HANOVER
CONSULTING ENGINEERS
NEW YORK, N. Y.

129-20

B. P. R. REG. NO.	STATE	PROJECT NUMBER	SHEET NO.	TOTAL SHEETS
1	MAINE	I-95-I (22) 16	7	14

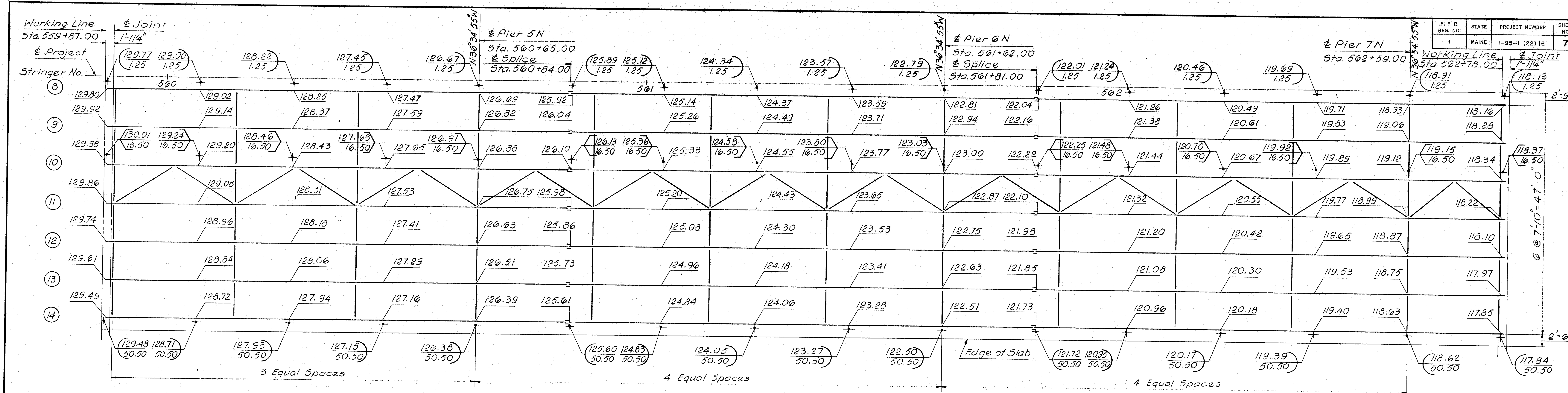
Working Line
Sta. 559+87.00
℄ Joint
1'-11¼"
℄ Project
Stringer No.
8
9
10
11
12
13
14
N36°34'55"W
℄ Pier 5N
Sta. 560+65.00
℄ Splice
Sta. 560+84.00
℄ Pier 6N
Sta. 561+62.00
℄ Splice
Sta. 561+81.00
℄ Pier 7N
Sta. 562+59.00
Working Line
Sta. 562+78.00
℄ Joint
1'-11¼"
560
561
562
2'-9½"
6 @ 7'-10" = 47'-0"
2'-6"
Edge of Slab
3 Equal Spaces
4 Equal Spaces
4 Equal Spaces
129.77/1.25 129.00/1.25 128.22/1.25 127.45/1.25 126.67/1.25 125.89/1.25 125.12/1.25 124.34/1.25 123.57/1.25 122.79/1.25 122.01/1.25 121.24/1.25 120.46/1.25 119.69/1.25 118.91/1.25 118.13/1.25
129.80 129.02 128.25 127.47 126.69 125.92 125.14 124.37 123.59 122.81 122.04 121.26 120.49 119.71 118.93 118.16
129.92 129.14 128.37 127.59 126.82 126.04 125.26 124.49 123.71 122.94 122.16 121.38 120.61 119.83 119.06 118.28
130.01/16.50 129.24/16.50 128.46/16.50 127.68/16.50 126.97/16.50 126.13/16.50 125.36/16.50 124.58/16.50 123.80/16.50 123.03/16.50 122.25/16.50 121.48/16.50 120.70/16.50 119.92/16.50 119.15/16.50 118.37/16.50
129.98 129.20 128.43 127.65 126.88 126.10 125.33 124.55 123.77 123.00 122.22 121.44 120.67 119.89 119.12 118.34
129.86 129.08 128.31 127.53 126.75 125.98 125.20 124.43 123.65 122.87 122.10 121.32 120.55 119.77 118.99 118.22
129.74 128.96 128.18 127.41 126.63 125.86 125.08 124.30 123.53 122.75 121.98 121.20 120.42 119.65 118.87 118.10
129.61 128.84 128.06 127.29 126.51 125.73 124.96 124.18 123.41 122.63 121.85 121.08 120.30 119.53 118.75 117.97
129.49 128.72 127.94 127.16 126.39 125.61 124.84 124.06 123.28 122.51 121.73 120.96 120.18 119.40 118.63 117.85
129.48/50.50 128.71/50.50 127.93/50.50 127.15/50.50 126.38/50.50 125.60/50.50 124.83/50.50 124.05/50.50 123.27/50.50 122.50/50.50 121.72/50.50 120.95/50.50 120.17/50.50 119.39/50.50 118.62/50.50 117.84/50.50

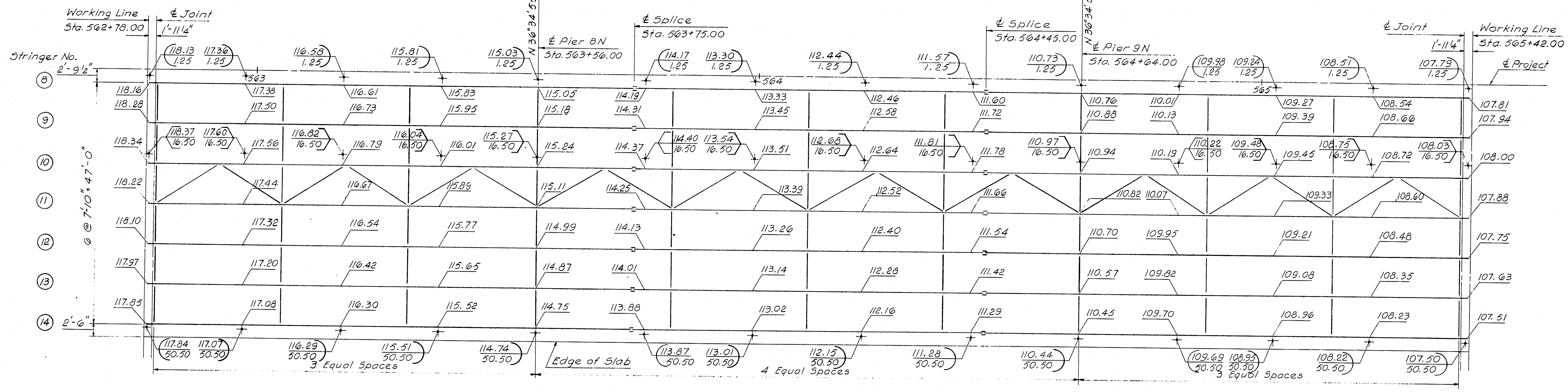
Working Line
Sta. 562+78.00
℄ Joint
1'-11¼"
Stringer No.
2'-9½"
8
9
10
11
12
13
14
N36°34'55"W
℄ Pier 8N
Sta. 563+56.00
℄ Splice
Sta. 563+75.00
℄ Splice
Sta. 564+45.00
℄ Pier 9N
Sta. 564+64.00
℄ Joint
1'-11¼"
Working Line
Sta. 565+42.00
℄ Project
563
564
565
6 @ 7'-10" = 47'-0"
2'-6"
Edge of Slab
3 Equal Spaces
4 Equal Spaces
3 Equal Spaces
118.13/1.25 117.36/1.25 116.58/1.25 115.81/1.25 115.03/1.25 114.17/1.25 113.30/1.25 112.44/1.25 111.57/1.25 110.73/1.25 109.98/1.25 109.24/1.25 108.51/1.25 107.79/1.25
118.16 117.38 116.61 115.83 115.05 114.19 113.33 112.46 111.60 110.76 110.01 109.27 108.54 107.81
118.28 117.50 116.73 115.95 115.18 114.31 113.45 112.58 111.72 110.88 110.13 109.39 108.66 107.94
118.37/16.50 117.60/16.50 116.82/16.50 116.04/16.50 115.27/16.50 114.40/16.50 113.54/16.50 112.68/16.50 111.81/16.50 110.97/16.50 110.22/16.50 109.48/16.50 108.75/16.50 108.03/16.50
118.34 117.56 116.79 116.01 115.24 114.37 113.51 112.64 111.78 110.94 110.19 109.45 108.72 108.00
118.22 117.44 116.67 115.89 115.11 114.25 113.39 112.52 111.66 110.82 110.07 109.33 108.60 107.88
118.10 117.32 116.54 115.77 114.99 114.13 113.26 112.40 111.54 110.70 109.95 109.21 108.48 107.75
117.97 117.20 116.42 115.65 114.87 114.01 113.14 112.28 111.42 110.57 109.82 109.08 108.35 107.63
117.85 117.08 116.30 115.52 114.75 113.88 113.02 112.16 111.29 110.45 109.70 108.96 108.23 107.51
117.84/50.50 117.07/50.50 116.29/50.50 115.51/50.50 114.74/50.50 113.87/50.50 113.01/50.50 112.15/50.50 111.28/50.50 110.44/50.50 109.69/50.50 108.95/50.50 108.22/50.50 107.50/50.50

STRINGER NUMBER	WEB PLATE	FLANGES										
		Sta. 559+87.00 to Sta. 560+46.00	Sta. 560+46.00 to Sta. 560+84.00	Sta. 560+84.00 to Sta. 561+43.00	Sta. 561+43.00 to Sta. 561+81.00	Sta. 561+81.00 to Sta. 562+40.00	Sta. 562+40.00 to Sta. 562+78.00	Sta. 562+78.00 to Sta. 563+37.00	Sta. 563+37.00 to Sta. 563+75.00	Sta. 563+75.00 to Sta. 564+45.00	Sta. 564+45.00 to Sta. 564+83.00	Sta. 564+83.00 to Sta. 565+42.00
1-14	54×7/16	16×3/4	16×1¼	16×3/4	16×1½	16×3/4	16×1¼	16×3/4	16×1½	16×7/8	16×1½	16×3/4
	54×1/2	Stringer Type "D"		Stringer Type "B-1"		Stringer Type "F-1"		Stringer Type "D"		Str. Type "E-2"	Stringer Type "D"	

Exp. Joint — Splice — Splice — Exp. Joint — Splice — Splice — Exp. Joint

HARDESTY & HANOVER
CONSULTING ENGINEERS
NEW YORK, N. Y.

2

DESIGN – A.W. Garcia
TRACE – A.D. Tchenkeli
CHECK – B. Rak A.W. Garcia

BRIDGE NO.
IN CHARGE OF – R.W. Christie

NEW HAMPSHIRE
DEPARTMENT OF PUBLIC WORKS AND HIGHWAYS
AND
MAINE STATE HIGHWAY COMMISSION
INTERSTATE 95 BRIDGE
OVER
PISCATAQUA RIVER
BETWEEN
PORTSMOUTH, NEW HAMPSHIRE AND KITTERY, MAINE

MAINE APPROACH
FRAMING PLAN
STA. 559 + 87 TO STA. 565 + 42

SHEET 7 OF 14

129-21

B. P. R. REG. NO.	STATE	PROJECT NUMBER	SHEET NO.	TOTAL SHEETS
1	MAINE	I-95-1 (22) 16	8	14

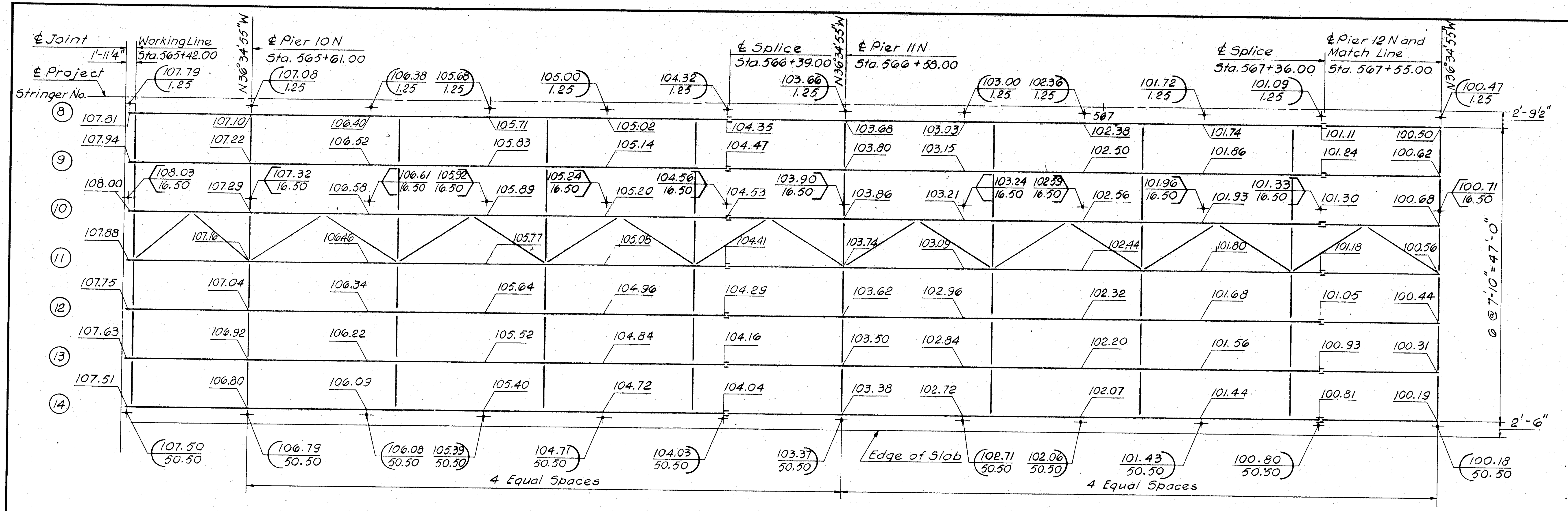

℄ Joint
1'-11¼"
℄ Project
Stringer No.
Working Line
Sta. 565+42.00
N36°34'55"W
℄ Pier 10 N
Sta. 565+61.00
℄ Splice
Sta. 566+39.00
℄ Pier 11 N
Sta. 566+58.00
℄ Splice
Sta. 567+36.00
℄ Pier 12 N and
Match Line
Sta. 567+55.00
567
8
9
10
11
12
13
14
2'-9½"
6 @ 7'-10" = 47'-0"
2'-6"
Edge of Slab
4 Equal Spaces
4 Equal Spaces

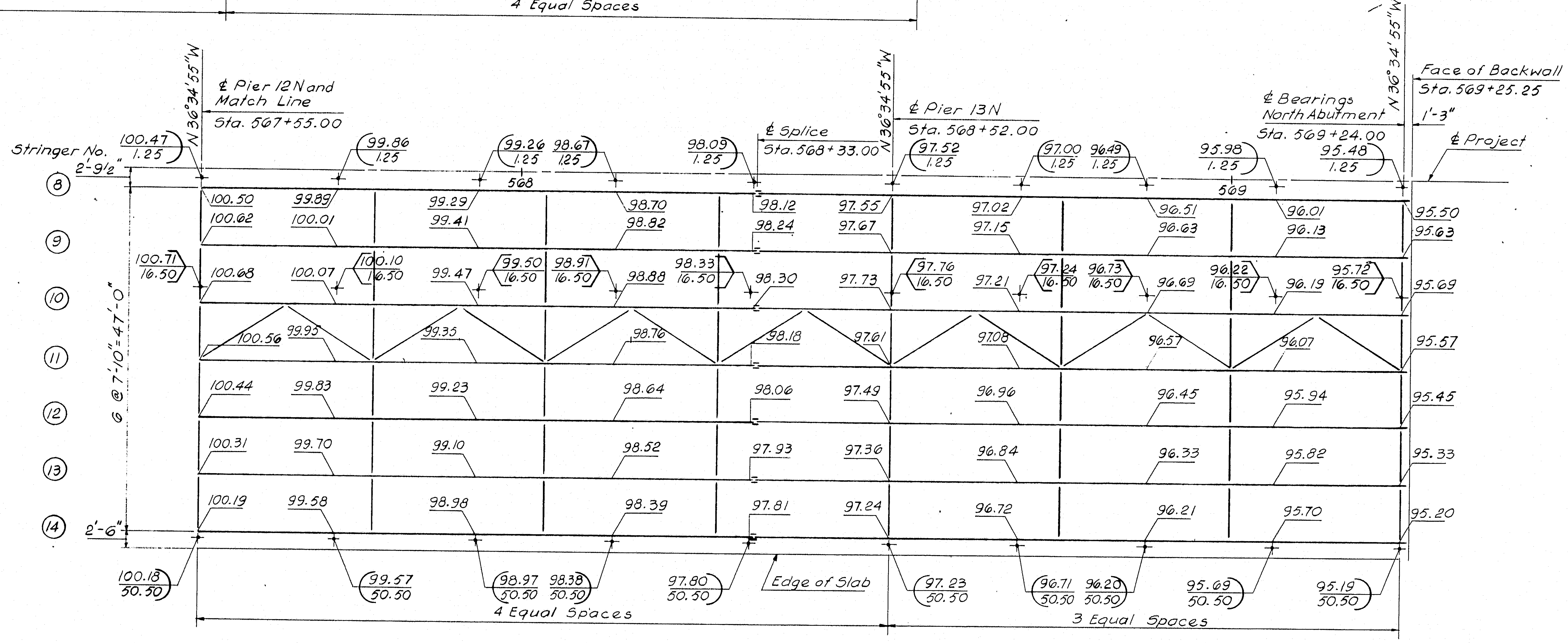

Stringer No.
2'-9½"
℄ Pier 12 N and
Match Line
Sta. 567+55.00
N36°34'55"W
℄ Splice
Sta. 568+33.00
℄ Pier 13 N
Sta. 568+52.00
℄ Bearings
North Abutment
Sta. 569+24.00
Face of Backwall
Sta. 569+25.25
1'-3"
℄ Project
568
569
8
9
10
11
12
13
14
6 @ 7'-10" = 47'-0"
2'-6"
Edge of Slab
4 Equal Spaces
3 Equal Spaces

STRINGER NUMBER	WEB PLATE	FLANGES							
		Sta. 565+42.00 to Sta. 565+80.00	Sta. 565+80.00 to Sta. 566+39.00	Sta. 566+39.00 to Sta. 566+77.00	Sta. 566+77.00 to Sta. 567+36.00	Sta. 567+36.00 to Sta. 567+74.00	Sta. 567+74.00 to Sta. 568+33.00	Sta. 568+33.00 to Sta. 568+71.00	Sta. 568+71.00 to Sta. 569+24.00
1-14	54×7/16 54×1/2	16×1¼	16×¾	16×1⅜	16×¾	16×1⅜	16×¾	16×1⅛	16×¾
		Stringer Type "F-1"		Stringer Type "B-1"		Stringer Type "B-1"		Stringer Type "A"	

Exp. Joint
Splice
Splice
Splice
Shoe

HARDESTY & HANOVER
CONSULTING ENGINEERS
NEW YORK, N. Y.

2

DESIGN — A. M. Garcia
TRACE — A. D. Tchenkeli
CHECK — B. Rok A. M. Garcia
BRIDGE NO.
IN CHARGE OF — R. W. Christie

NEW HAMPSHIRE
DEPARTMENT OF PUBLIC WORKS AND HIGHWAYS
AND
MAINE STATE HIGHWAY COMMISSION
INTERSTATE 95 BRIDGE
OVER
PISCATAQUA RIVER
BETWEEN
PORTSMOUTH, NEW HAMPSHIRE AND KITTERY, MAINE
MAINE APPROACH
FRAMING PLAN
STA. 565 + 42 TO STA. 569 + 24
SHEET 8 OF 14

129-22

B. P. R. REG. NO.	STATE	PROJECT NUMBER	SHEET NO.	TOTAL SHEETS
1	MAINE	I-95-1(22)16	9	14

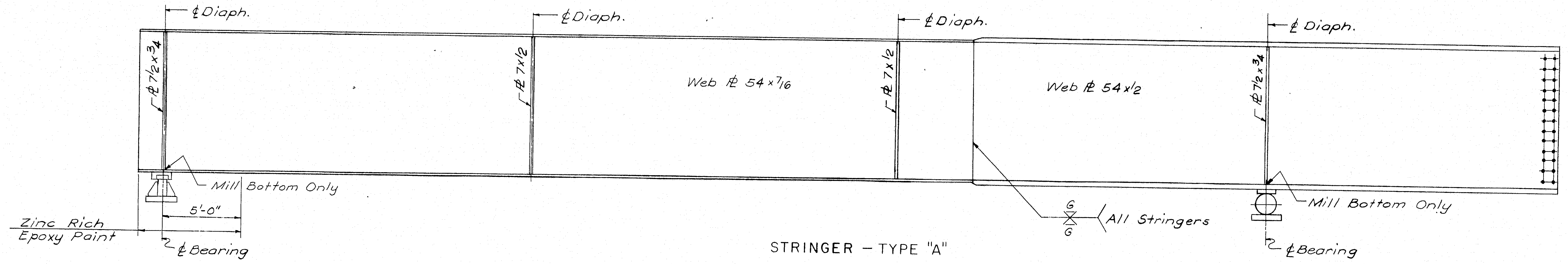

℄ Diaph.
℄ Diaph.
℄ Diaph.
℄ Diaph.
PL 7½x¾
PL 7x½
Web PL 54x7/16
PL 7x½
Web PL 54x½
PL 7½x¾
Mill Bottom Only
5'-0"
Zinc Rich Epoxy Paint
℄ Bearing
6
6
All Stringers
Mill Bottom Only
℄ Bearing

STRINGER – TYPE "A"

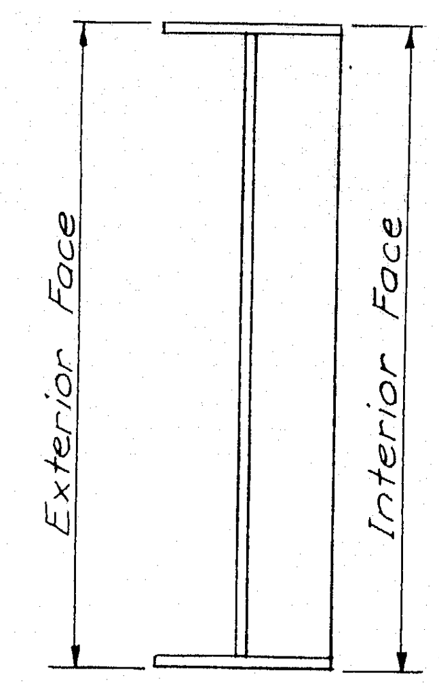

Exterior Face
Interior Face

SECTION AT DIAPHRAGM
FASCIA STRINGER
Scale: ¾"=1'-0"

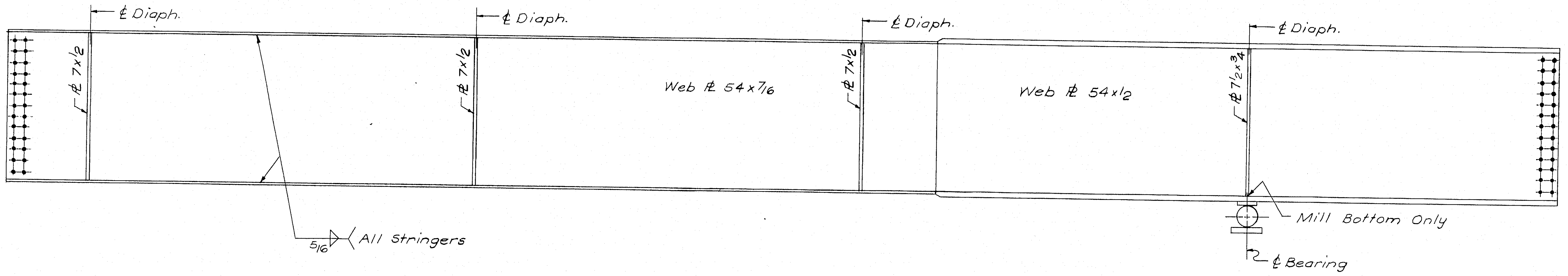

℄ Diaph.
℄ Diaph.
℄ Diaph.
℄ Diaph.
PL 7x½
PL 7x½
Web PL 54x7/16
PL 7x½
Web PL 54x½
PL 7½x¾
5/16
All Stringers
Mill Bottom Only
℄ Bearing

STRINGER – TYPE "B1"

NOTE:
See Framing Plans for Flange Thickness.

2

DESIGN —
TRACE — A. Klein
CHECK — S.S. Nishimura

BRIDGE NO.
IN CHARGE OF — R.W. Christie

NEW HAMPSHIRE
DEPARTMENT OF PUBLIC WORKS AND HIGHWAYS
AND
MAINE STATE HIGHWAY COMMISSION
INTERSTATE 95 BRIDGE
OVER
PISCATAQUA RIVER
BETWEEN
PORTSMOUTH, NEW HAMPSHIRE AND KITTERY, MAINE

APPROACH SPANS

STRINGER TYPES I

SHEET 9 OF 14

HARDESTY & HANOVER
CONSULTING ENGINEERS
NEW YORK, N. Y.

129-23

B.P.R. REG. NO.	STATE	PROJECT NUMBER	SHEET NO.	TOTAL SHEETS
1	MAINE	I-95-1(22)16	10	14

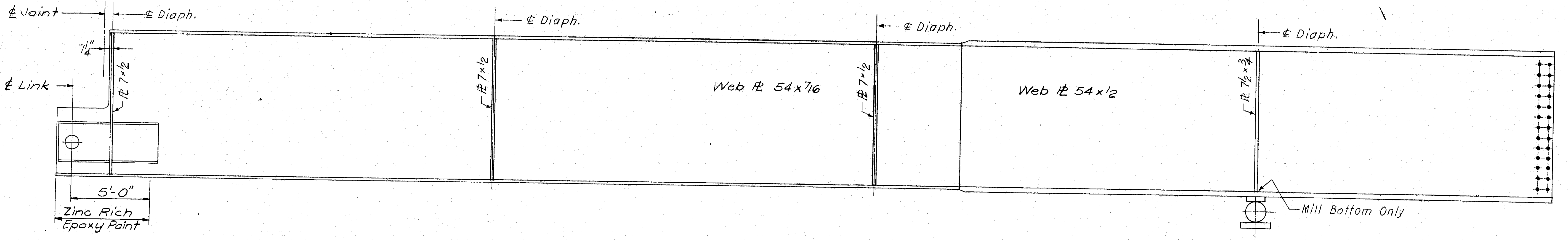

℄ Joint
℄ Diaph.
7¼"
℄ Link
PL 7×½
5'-0"
Zinc Rich Epoxy Paint
℄ Diaph.
PL 7×½
Web PL 54×7/16
℄ Diaph.
PL 7×½
Web PL 54×½
℄ Diaph.
PL 7½×¾
Mill Bottom Only
℄ Bearing

STRINGER – TYPE "D"

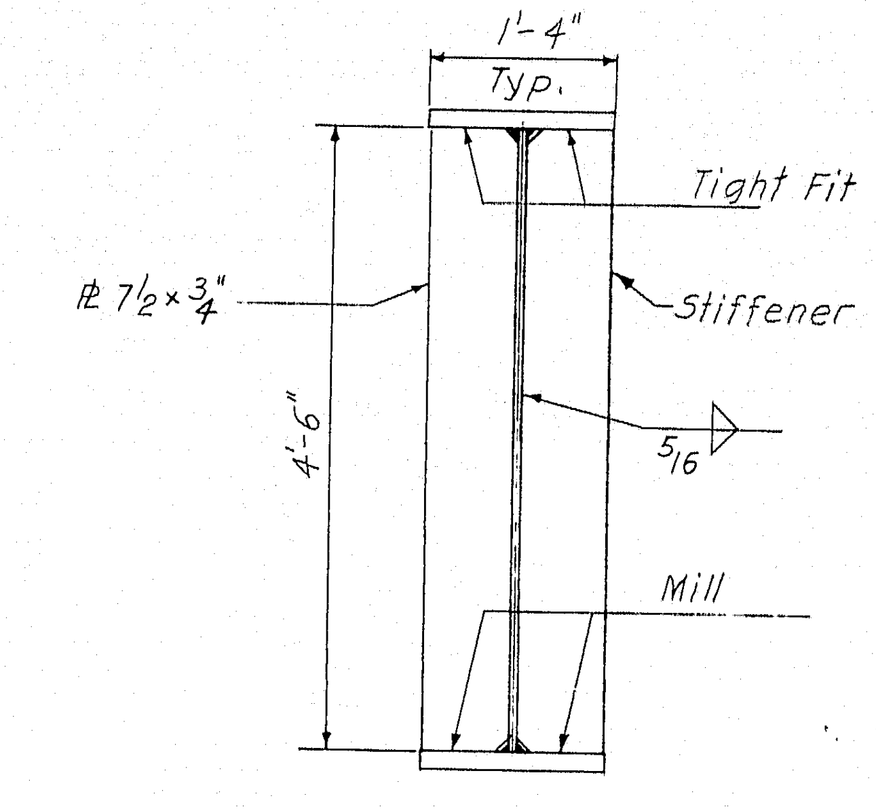

1'-4"
Typ.
Tight Fit
PL 7½×¾"
Stiffener PL 7½×¾
4'-6"
5/16
Mill

SECTION AT BEARING
INTERIOR & FASCIA STRINGERS
Scale: ¾"=1'-0"

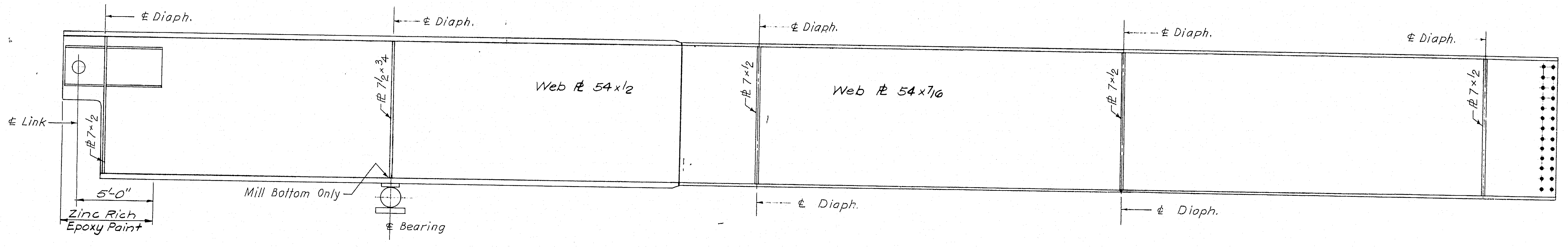

℄ Diaph.
℄ Diaph.
Web PL 54×½
PL 7½×¾
℄ Link
PL 7×½
5'-0"
Zinc Rich Epoxy Paint
Mill Bottom Only
℄ Bearing
℄ Diaph.
PL 7×½
Web PL 54×7/16
℄ Diaph.
PL 7×½
℄ Diaph.
PL 7×½
℄ Diaph.
℄ Diaph.

STRINGER – TYPE "F1"

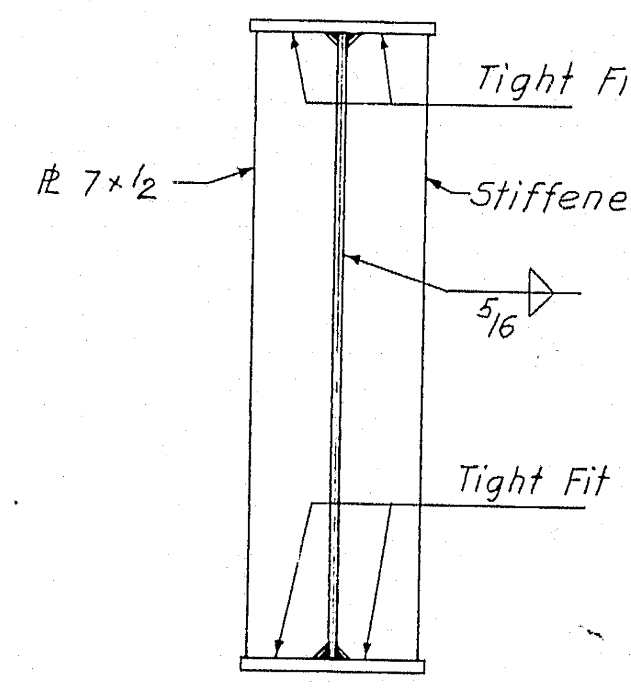

Tight Fit
PL 7×½
Stiffener PL 7×½
5/16
Tight Fit

SECTION AT DIAPHRAGM
INTERIOR STRINGERS
Scale: ¾"=1'-0"

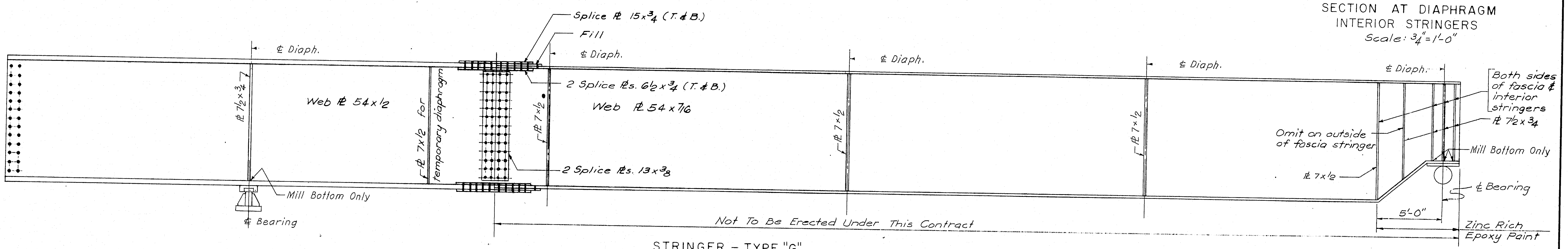

Splice PL 15×¾ (T.& B.)
Fill
℄ Diaph.
℄ Diaph.
2 Splice PLs. 6½×¾ (T.& B.)
Web PL 54×½
Web PL 54×7/16
PL 7½×¾
PL 7×½ for temporary diaphragm
PL 7×½
2 Splice PLs. 13×⅜
Mill Bottom Only
℄ Bearing
℄ Diaph.
PL 7×½
℄ Diaph.
PL 7×½
℄ Diaph.
Both sides of fascia & interior stringers
PL 7½×¾
Omit on outside of fascia stringer
PL 7×½
Mill Bottom Only
℄ Bearing
5'-0"
Zinc Rich Epoxy Paint
Not To Be Erected Under This Contract

STRINGER – TYPE "G"

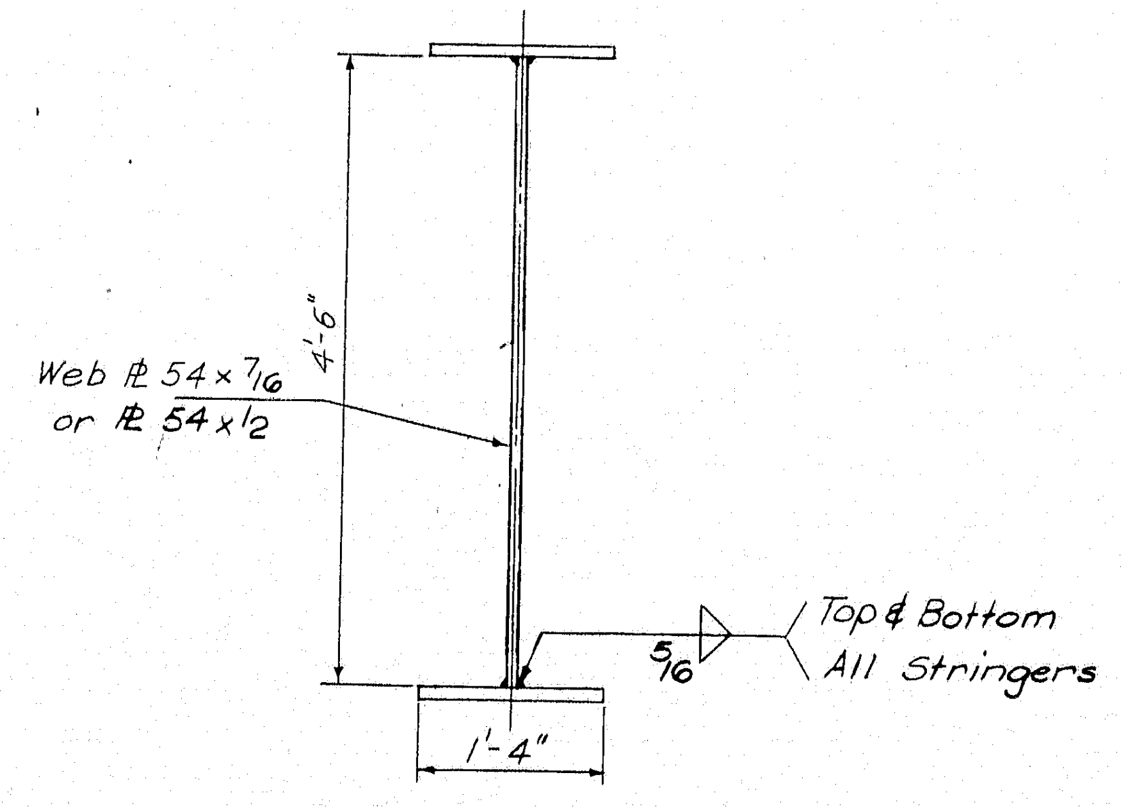

Web PL 54×7/16 or PL 54×½
4'-6"
5/16
Top & Bottom All Stringers
1'-4"

TYPICAL SECTION
INTERIOR STRINGERS
Scale: ¾"=1'-0"

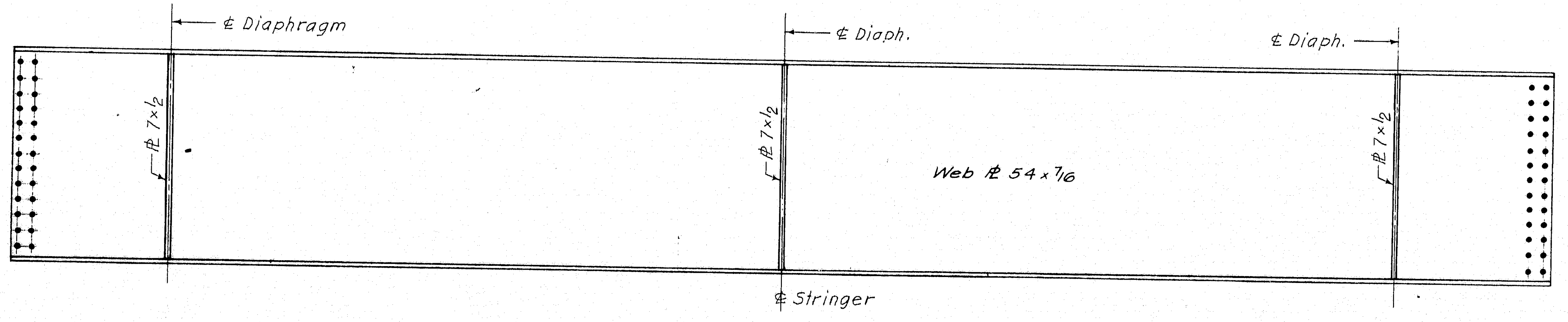

℄ Diaphragm
PL 7×½
℄ Diaph.
PL 7×½
Web PL 54×7/16
℄ Diaph.
PL 7×½
℄ Stringer

STRINGER – TYPE "E2"

HARDESTY & HANOVER
CONSULTING ENGINEERS
NEW YORK, N.Y.

2

DESIGN – G. M. Garcia
TRACE – A. Klein
CHECK – S. S. Nishimura

BRIDGE NO.
IN CHARGE OF – R. W. Christie

NEW HAMPSHIRE
DEPARTMENT OF PUBLIC WORKS AND HIGHWAYS
AND
MAINE STATE HIGHWAY COMMISSION
INTERSTATE 95 BRIDGE
OVER
PISCATAQUA RIVER
BETWEEN
PORTSMOUTH, NEW HAMPSHIRE AND KITTERY, MAINE
APPROACH SPANS

STRINGER TYPES II

SHEET 10 OF 14

129-24

B. P. R. REG. NO.	STATE	PROJECT NUMBER	SHEET NO.	TOTAL SHEETS
1	MAINE	I-95-1(22)16	11	14

		North Anchor Pier		Pier 1N		Pier 2N		Pier 3N		Pier 4N		Pier 5N		Pier 6N		Pier 7N		Pier 8N		Pier 9N		Pier 10N		Pier 11N		Pier 12N		Pier 13N		North Abutment
MOMENT	Dead Load	0	+879	-1,430	+304	-1,080	+479	-1,210	+475	-1060	+590	-1,140	+479	-1,222	+475	-995	+475	-1,400	+692	-1,400	+475	-995	+475	-1,222	+431	-1,129	+440	-1,070	+404	0
	Max. Live Load	0	+782	-1,039	+612	-907	+623	-990	+620	-774	+605	-795	+560	-956	+620	-822	+594	-899	+677	-899	+594	-822	+620	-893	+603	-891	+574	-719	+564	0
	Max. Impact	0	+179	-236	+138	-207	+140	-290	+140	-226	+139	-232	+126	-282	+140	-240	+134	-197	+145	-197	+134	-240	+140	-201	+137	-201	+131	-172	+144	0
	Maximum Moment	0	+1,840	-2,705	+1,054	-2,194	+1,242	-2,490	+1,235	-2,060	+1,334	-2,167	+1,165	-2,460	+1,235	-2,057	+1,203	-2,496	+1,514	-2,496	+1,203	-2,057	+1,235	-2,316	+1,171	-2,221	+1,145	-1,961	+1,112	0
	Min. Live Load	0	-193	+144	-311	+214	-310	+307	-310	+193	-106	+157	-239	+298	-310	+145	-215	+229	-250	+229	-215	+145	-310	+310	-308	+394	-235	+228	-212	0
	Min. Impact	0	-44	+32	-70	+45	-70	+69	-70	+56	-31	+46	-70	+88	-70	+42	-48	+50	-54	+50	-48	+42	-70	+70	-69	+88	-53	+54	-54	0
	Minimum Moment	0	+642	-1,254	-77	-821	+99	-834	+95	-811	+453	-937	+170	-836	+95	-808	+212	-1,121	+388	-1,121	+212	-808	+95	-842	+54	-647	+152	-788	+138	0
SHEAR	Dead Load	+48		+74		+57		+57		+57		+57		+57		+57		+75		+75		+59		+59		+59		+67		+40
	Max. Live Load	+38		+46		+44		+44		+44		+44		+44		+44		+48		+48		+43		+43		+43		+45		+36
	Max. Impact	+9		+10		+10		+10		+10		+10		+10		+10		+11		+11		+10		+10		+10		+10		+8
	Maximum Shear	+95		+130		+111		+111		+111		+111		+111		+111		+134		+134		+112		+112		+112		+122		+84
	Min. Live Load	-3		-1		-7		-7		-7		-7		-7		-7		-2		-2		-7		-7		-7		-5		-6
	Min. Impact	-1		—		-2		-2		-2		-2		-2		-2		—		—		-2		-2		-2		-1		-2
	Minimum Shear	+44		+73		+48		+48		+48		+48		+48		+48		+73		+73		+50		+50		+50		+61		+32
	Design Moment	0	+1,840	-2,705	+1,054	-2,194	+1,242	-2,490	+1,235	-2,060	+1,334	-2,167	+1,165	-2,460	+1,235	-2,057	+1,203	-2,496	+1,514	-2,496	+1,203	-2,057	+1,235	-2,316	+1,171	-2,221	+1,145	-1,961	+1,112	0
	Allow. Stress	20.0	20.0	20.0	19.5	20.0	20.0	20.0	20.0	20.0	20.0	20.0	20.0	20.0	20.0	20.0	20.0	20.0	20.0	20.0	20.0	20.0	20.0	20.0	20.0	20.0	20.0	20.0	20.0	20.0
	S.M. Required	0	1,104	1,623	649	1,316	745	1,494	741	1,236	800	1,300	699	1,476	741	1,234	722	1,498	908	1,498	722	1,234	741	1,390	703	1,333	687	1,177	667	0
	S.M. Provided	—	1,205	1,635	855	1,421	855	1,527	855	1,313	855	1,310	855	1,527	855	1,310	855	1,527	962	1,527	855	1,310	855	1,421	855	1,421	855	1,205	855	855
	Design Shear	95		130		111		111		111		111		111		111		134		134		112		112		112		122		84
	Area req. @12 ksi	7.9		10.8		9.3		9.3		9.3		9.3		9.3		9.3		11.2		11.2		9.3		9.3		9.3		10.2		7.0
	Area Provided	15.6		27.0		27.0		27.0		27.0		27.0		27.0		27.0		27.0		27.0		27.0		27.0		27.0		27.0		27.0

8 Spans @ 97'-0" = 766'-0" 108'-0" 4 Spans @ 97'-0" = 388'-0" 72'-0"

STRINGER STRESS SHEET

Moments at center of Spans and over Supports
Shear at Supports

UNITS

Moment	Foot-kips
Shear	Kips
Unit Stress	Kips per square inch
Section Modulus	Inches cubed
Area	Square inches

NOTE:
Maximum shear is the larger of the two shear values at each bearing.

LOAD	No. Anch. Pier				Pier 1				Pier 2				Pier 3				Pier 4				Pier 5				Pier 6			
	1/5	2/5	3/5	4/5	1 1/5	1 2/5	1 3/5	1 4/5	2 1/5	2 2/5	2 3/5	2 4/5	3 1/5	3 2/5	3 3/5	3 4/5	4 1/5	4 2/5	4 3/5	4 4/5	5 1/5	5 2/5	5 3/5	5 4/5	6 1/5	6 2/5	6 3/5	6 4/5
Steel	1/8	3/16	3/16	1/16	—	1/16	1/16	—	1/16	1/16	1/16	1/16	1/16	1/16	1/16	1/16	1/16	1/16	1/16	1/16	1/16	1/16	1/16	1/16	1/16	1/8	1/8	1/16
Concrete	5/8	13/16	13/16	7/16	1/8	1/4	1/4	1/8	1/8	3/8	3/8	1/8	3/16	7/16	7/16	3/16	3/16	3/8	3/8	3/16	3/16	7/16	7/16	3/16	1/4	1/2	1/2	1/4
Asphalt	1/16	1/8	1/8	1/16	—	—	—	—	—	1/16	1/16	—	—	1/16	1/16	—	—	1/16	1/16	—	—	1/16	1/16	—	—	1/16	1/16	—
TOTAL	13/16	1 1/4	1 1/8	9/16	1/8	5/16	5/16	1/8	3/16	1/2	1/2	3/16	1/4	9/16	9/16	1/4	1/4	1/2	1/2	1/4	1/4	9/16	9/16	1/4	5/16	11/16	11/16	5/16

LOAD	Pier 7				Pier 8				Pier 9				Pier 10				Pier 11				Pier 12				Pier 13		
	7 1/5	7 2/5	7 3/5	7 4/5	8 1/5	8 2/5	8 3/5	8 4/5	9 1/5	9 2/5	9 3/5	9 4/5	10 1/5	10 2/5	10 3/5	10 4/5	11 1/5	11 2/5	11 3/5	11 4/5	12 1/5	12 2/5	12 3/5	12 4/5	13 1/4	13 1/2	13 3/4
Steel	1/16	1/16	1/16	—	1/16	1/8	1/8	1/16	—	1/16	1/16	1/16	1/16	1/8	1/8	1/16	1/16	1/16	1/16	1/16	1/16	1/8	1/8	1/16	1/16	1/16	1/16
Concrete	1/8	5/16	1/4	1/8	1/4	5/8	5/8	1/4	1/16	1/4	5/16	1/8	1/4	7/16	7/16	3/16	1/8	7/16	7/16	3/16	1/4	9/16	9/16	1/4	1/8	1/4	1/8
Asphalt	—	1/16	1/16	—	—	1/16	1/16	—	—	1/16	1/16	—	—	1/16	1/16	—	—	1/16	1/16	—	1/16	1/16	1/16	1/16	—	—	—
TOTAL	3/16	7/16	3/8	1/8	5/16	13/16	13/16	5/16	1/16	3/8	7/16	3/16	5/16	5/8	5/8	1/4	3/16	9/16	9/16	1/4	3/8	3/4	3/4	3/8	3/16	5/16	3/16

Stringers 1-14

DEAD LOAD DEFLECTIONS FOR STRINGERS

2

DESIGN — A. M. Garcia
TRACE — A.D. Tchenkeli
CHECK — S.S. Nishimura

BRIDGE NO.
IN CHARGE OF — R. W. Christie

NEW HAMPSHIRE
DEPARTMENT OF PUBLIC WORKS AND HIGHWAYS
AND
MAINE STATE HIGHWAY COMMISSION
INTERSTATE 95 BRIDGE
OVER
PISCATAQUA RIVER
BETWEEN
PORTSMOUTH, NEW HAMPSHIRE AND KITTERY, MAINE

STRINGER DATA

SHEET 11 OF 14

HARDESTY & HANOVER
CONSULTING ENGINEERS
NEW YORK, N. Y.

129-25

B. P. R. REG. NO.	STATE	PROJECT NUMBER	SHEET NO.	TOTAL SHEETS
1	MAINE	I-95-1(22)16	12	14

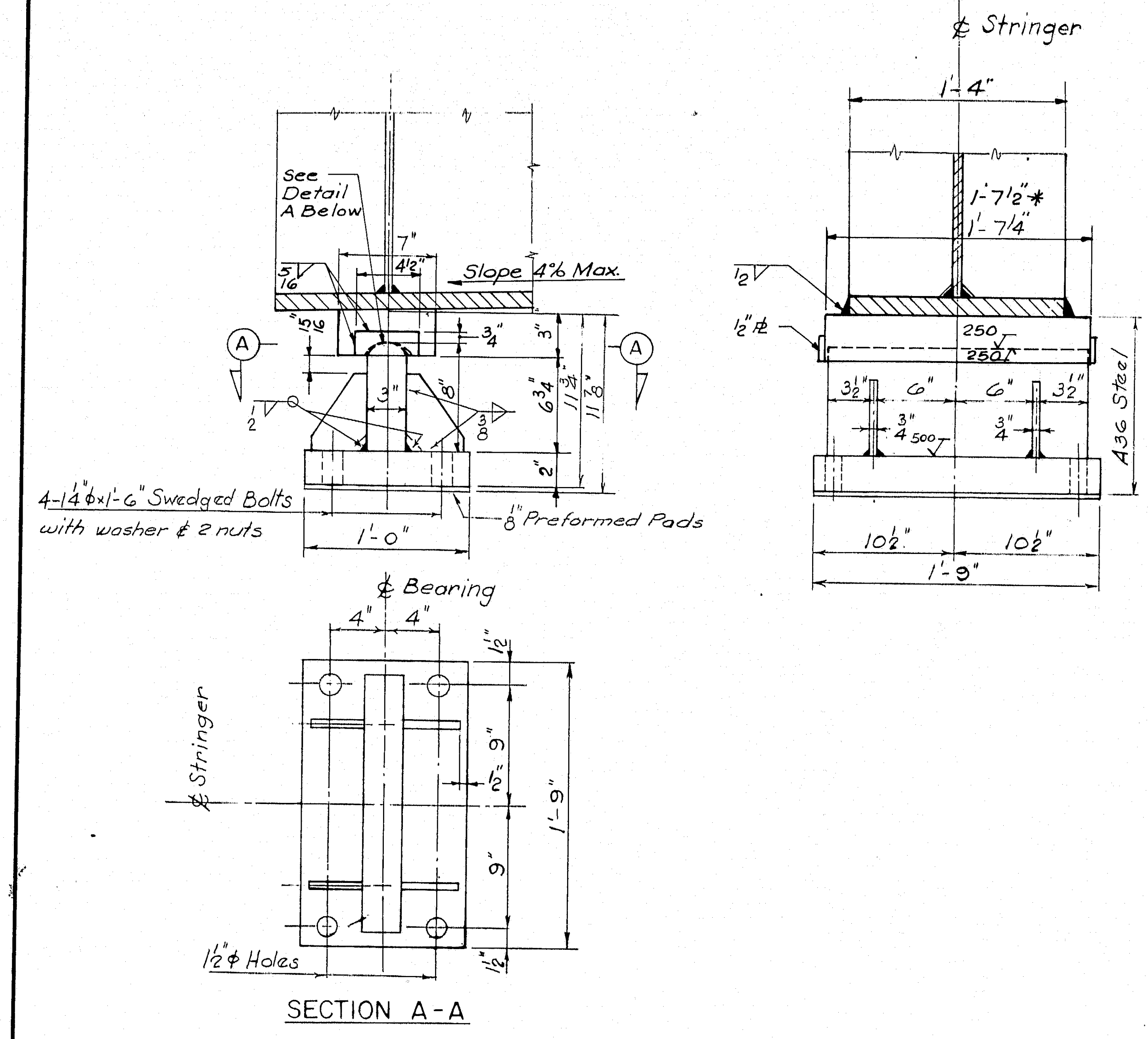

℄ Stringer
See Detail A Below
Slope 4% Max.
1'-4"
1'-7½"*
1'-7¼"
A36 Steel
4-1¼"ϕ×1'-6" Swedged Bolts with washer & 2 nuts
⅛" Preformed Pads
1'-0"
10½"
1'-9"
℄ Bearing
℄ Stringer
1½ϕ Holes
SECTION A-A

FIXED SHOES
(AT ABUTMENTS)
SCALE: 1½" = 1'-0"

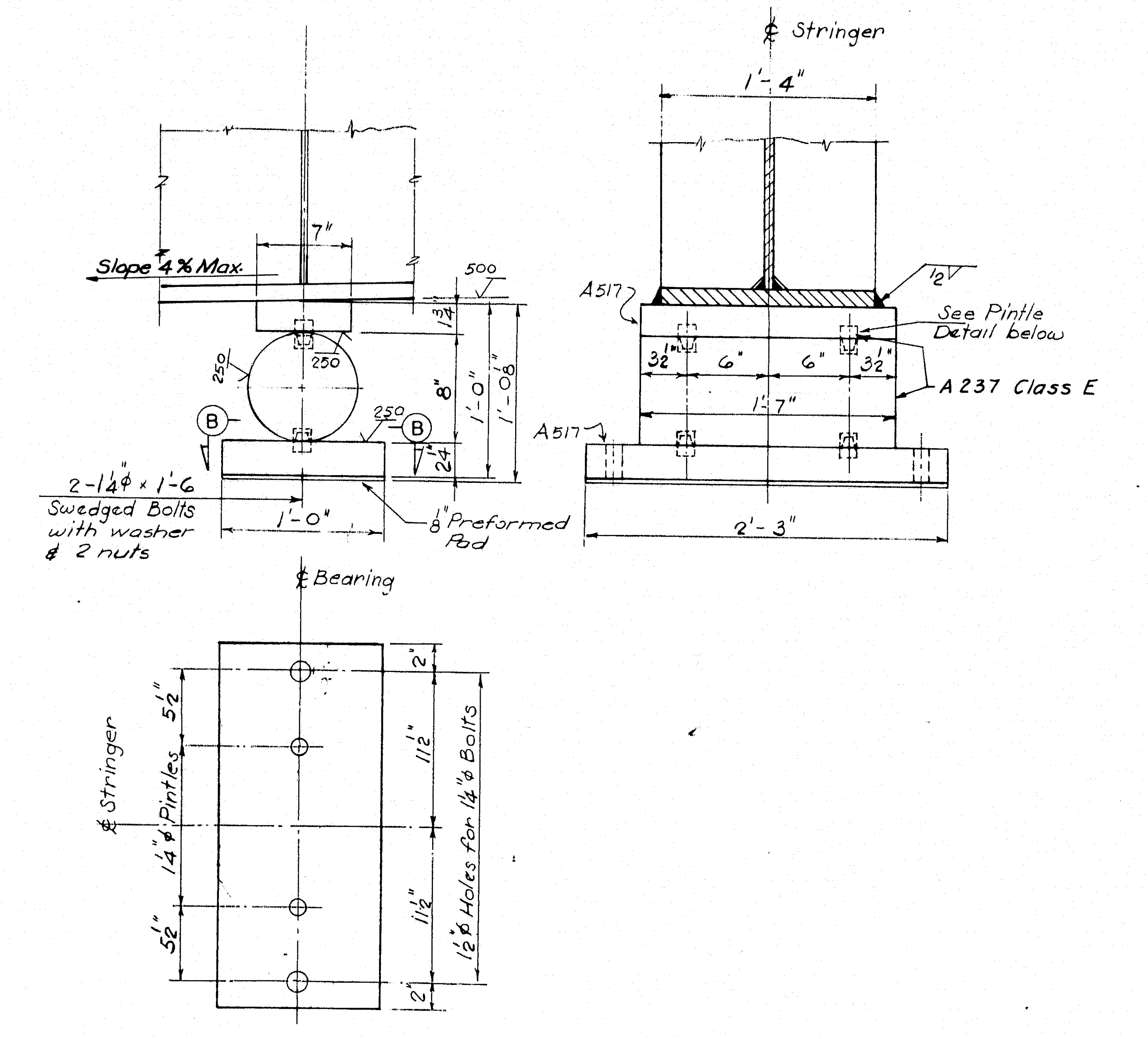

℄ Stringer
Slope 4% Max.
1'-4"
A517
See Pintle Detail below
A 237 Class E
2-1¼ϕ×1'-6 Swedged Bolts with washer & 2 nuts
⅛" Preformed Pad
1'-0"
1'-7"
2'-3"
℄ Bearing
℄ Stringer
1¼ϕ Pintles
1½ϕ Holes for 1¼"ϕ Bolts
SECTION B-B

EXPANSION SHOES
SCALE: 1½" = 1'-0"

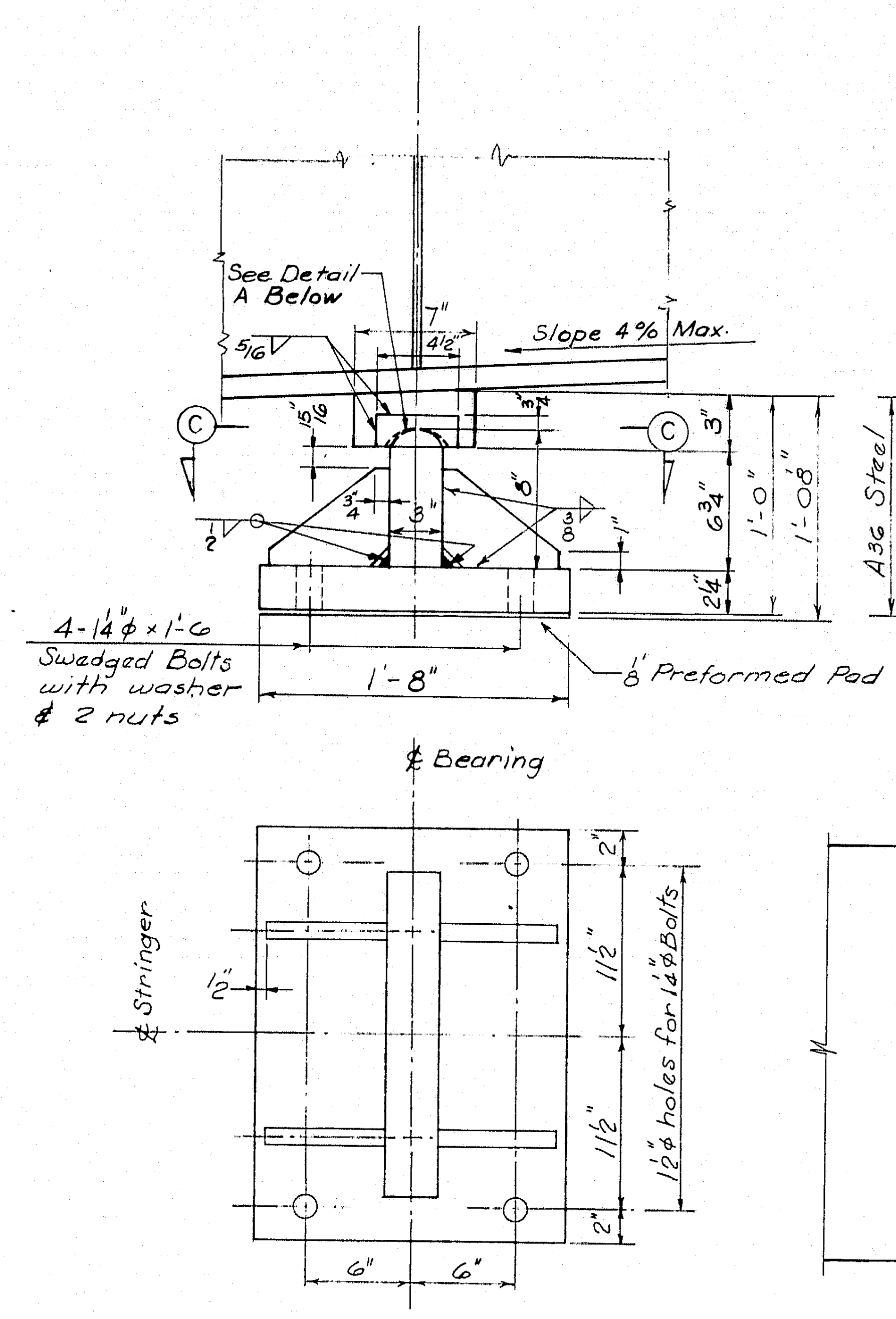

℄ Stringer
See Detail A Below
Slope 4% Max.
1'-4"
1'-7½"*
1'-7¼"
A36 Steel
4-1¼ϕ×1'-6 Swedged Bolts with washer & 2 nuts
⅛" Preformed Pad
1'-8"
2'-3"
℄ Bearing
℄ Stringer
1½ϕ holes for 1¼ϕ Bolts
SECTION C-C

FIXED SHOES (AT PIERS)
SCALE: 1½" = 1'-0"

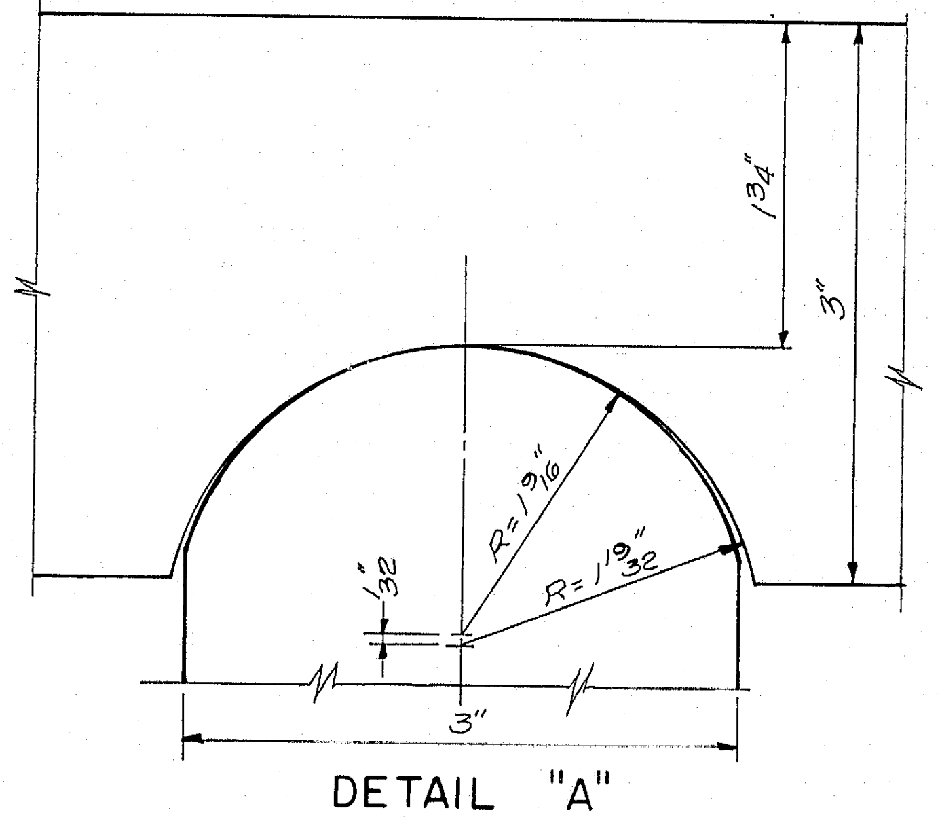

R=1 3/16
R=1 3/32
3"

DETAIL "A"
No Scale

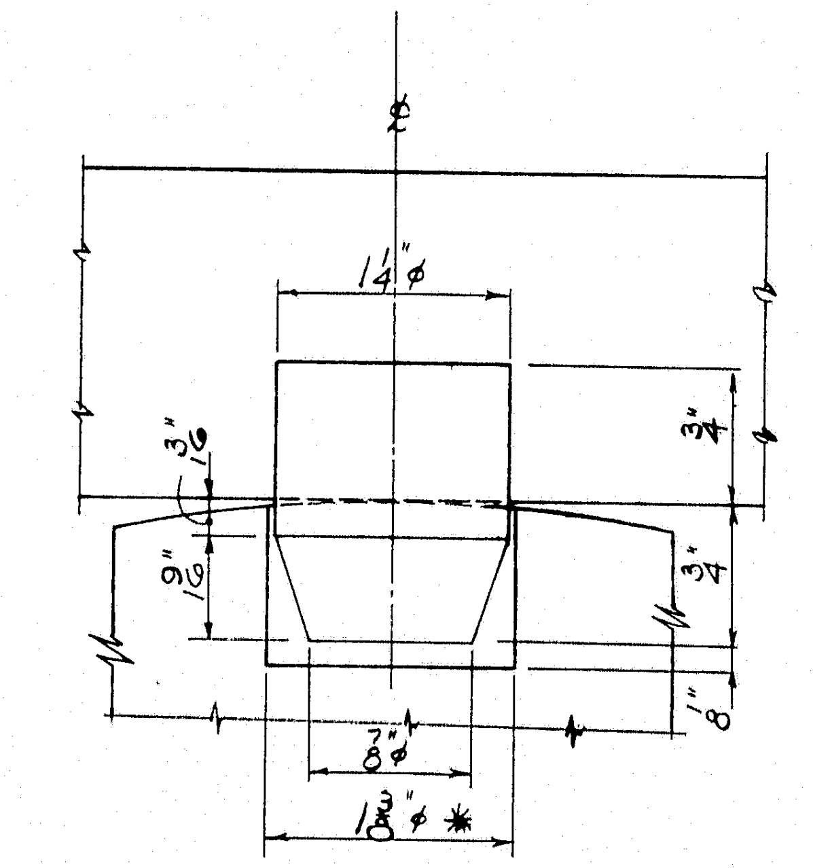

PINTLE DETAIL
SCALE 12" = 1'-0"

*Note: Provide elongated holes, 1⅜"×1¾" for pintles in outer 2 stringers at each edge of each half of the structure to allow for transverse expansion of structure. In typical Section, stringers 1,2,6,7,8,9,13 & 14 would have elongated holes for expansion shoes and 1'-7½" for fixed shoes as noted.

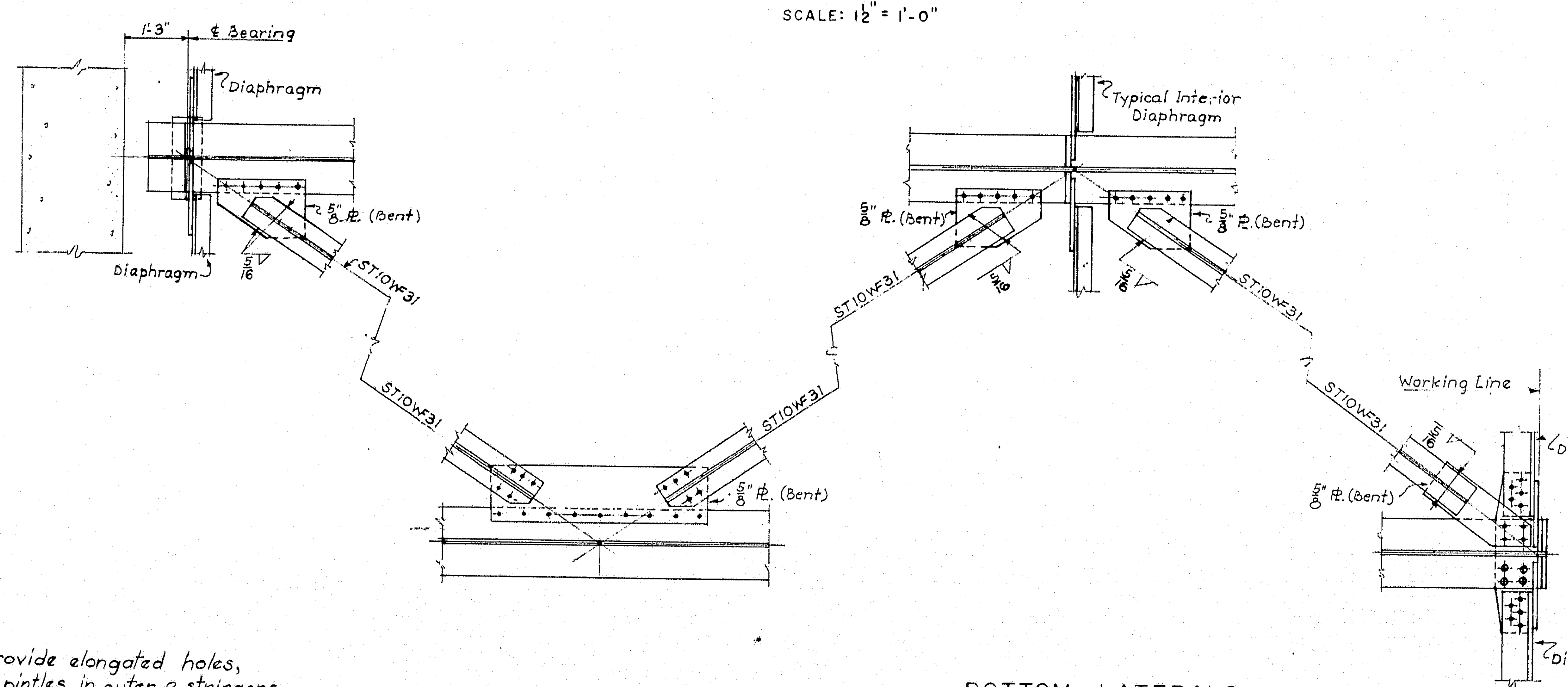

1'-3"
℄ Bearing
Diaphragm
⅝" ℄ (Bent)
ST10WF31
Typical Interior Diaphragm
Working Line

BOTTOM LATERALS
SCALE: ½" = 1'-0"

2

DESIGN – Alex Krywoschy
TRACE – A. J. Mostowicz
CHECK – S.S. Kishimuch
BRIDGE NO.
IN CHARGE OF – R. W. Christie

HARDESTY & HANOVER
CONSULTING ENGINEERS
NEW YORK, N. Y.

NEW HAMPSHIRE
DEPARTMENT OF PUBLIC WORKS AND HIGHWAYS
AND
MAINE STATE HIGHWAY COMMISSION
INTERSTATE 95 BRIDGE
OVER
PISCATAQUA RIVER
BETWEEN
PORTSMOUTH, NEW HAMPSHIRE AND KITTERY, MAINE
APPROACH SPANS
SHOES
BOTTOM LATERALS

SHEET 12 OF 14

129-26

B. P. R. REG. NO.	STATE	PROJECT NUMBER	SHEET NO.	TOTAL SHEETS
1	MAINE	I-95-1 (22) 16	13	14

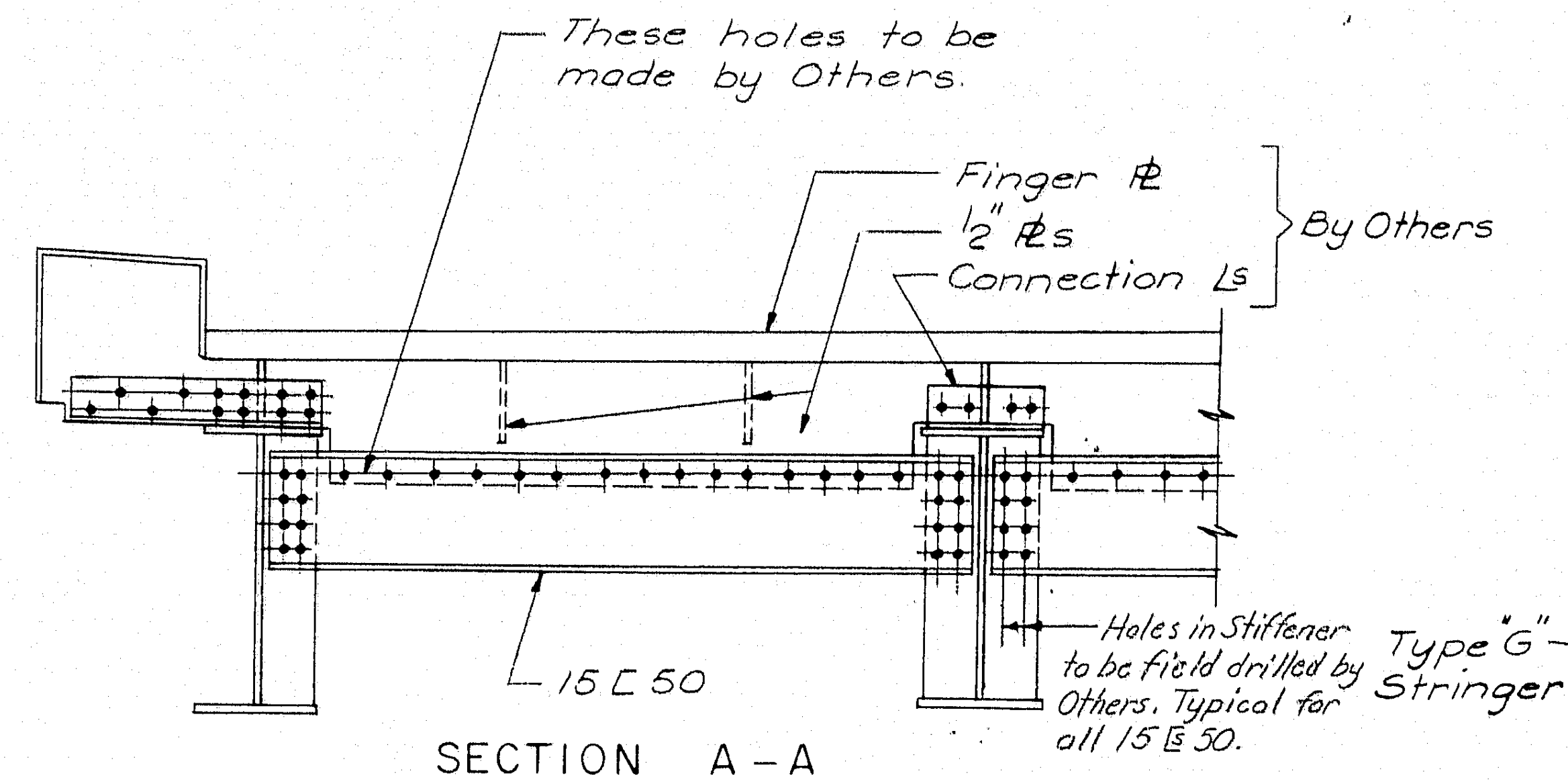
These holes to be made by Others.
Finger ℞
½" ℞s
Connection ∟s
By Others
15 [50
Holes in Stiffener to be field drilled by Others. Typical for all 15 [50.

SECTION A-A

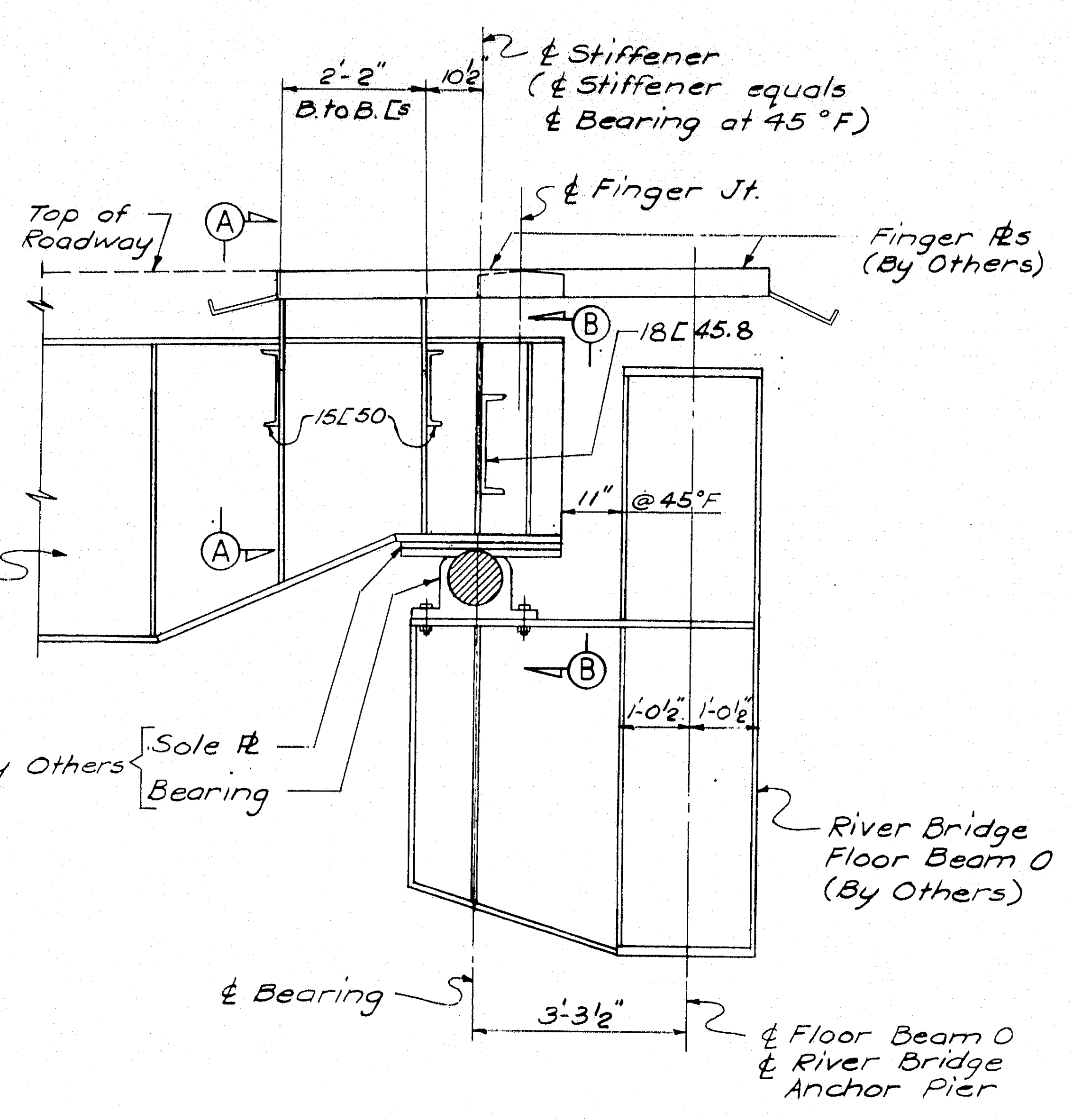
2'-2"
B. to B. ∟s
10½"
℄ Stiffener (℄ Stiffener equals ℄ Bearing at 45 °F)
℄ Finger Jt.
Top of Roadway
A
Finger ℞s (By Others)
B
18 [45.8
15 [50
11" @ 45°F
Type "G" Stringer
A
B
By Others
Sole ℞
Bearing
1'-0½"
1'-0½"
River Bridge Floor Beam O (By Others)
℄ Bearing
3'-3½"
℄ Floor Beam O
℄ River Bridge Anchor Pier

DETAIL AT RIVER BRIDGE

Scale: ½" = 1'-0"

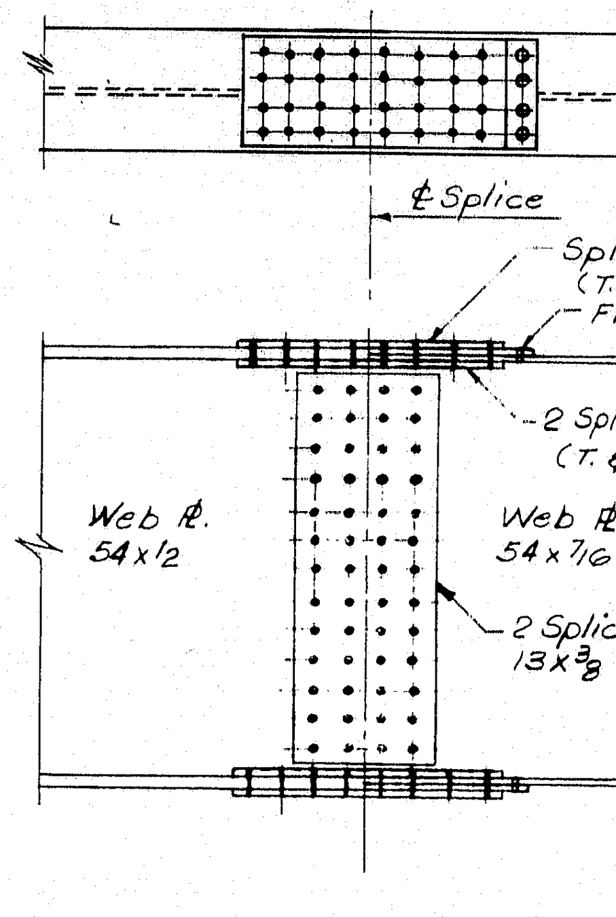
℄ Splice
Splice ℞ 15 x ½ (T. & B.)
Fill - As Req'd.
2 Splice ℞s. 6½ x ½ (T. & B.)
Web ℞. 54 x ½
Web ℞. 54 x 7/16
2 Splice ℞s. 13 x ⅜

TYPICAL SPLICE

Except for Type "G" Stringer

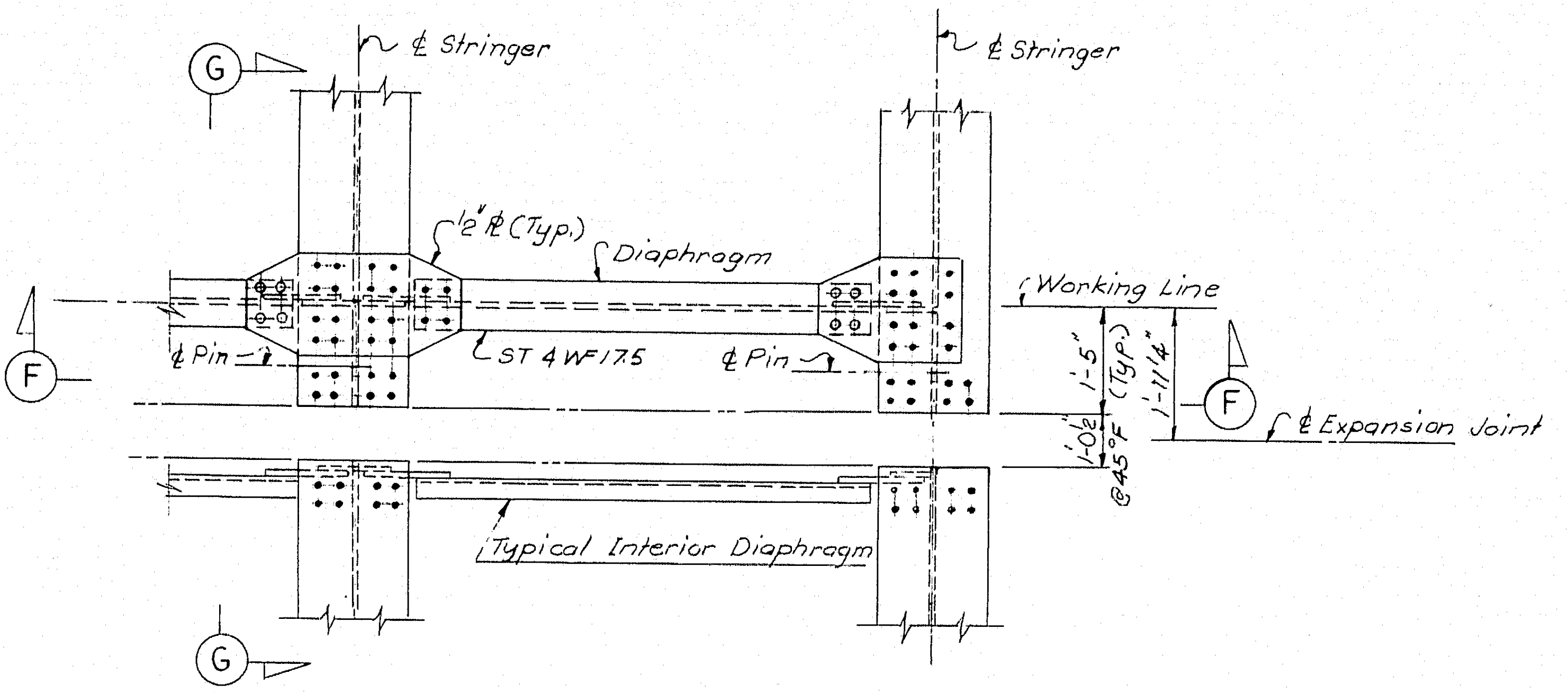
G
℄ Stringer
℄ Stringer
½" ℞ (Typ.)
Diaphragm
Working Line
℄ Pin
ST 4 WF 17.5
℄ Pin
1'-5" (Typ.)
1'-1¼" @ 45°F
F
F
℄ Expansion Joint
Typical Interior Diaphragm
G

PLAN SECTION E-E

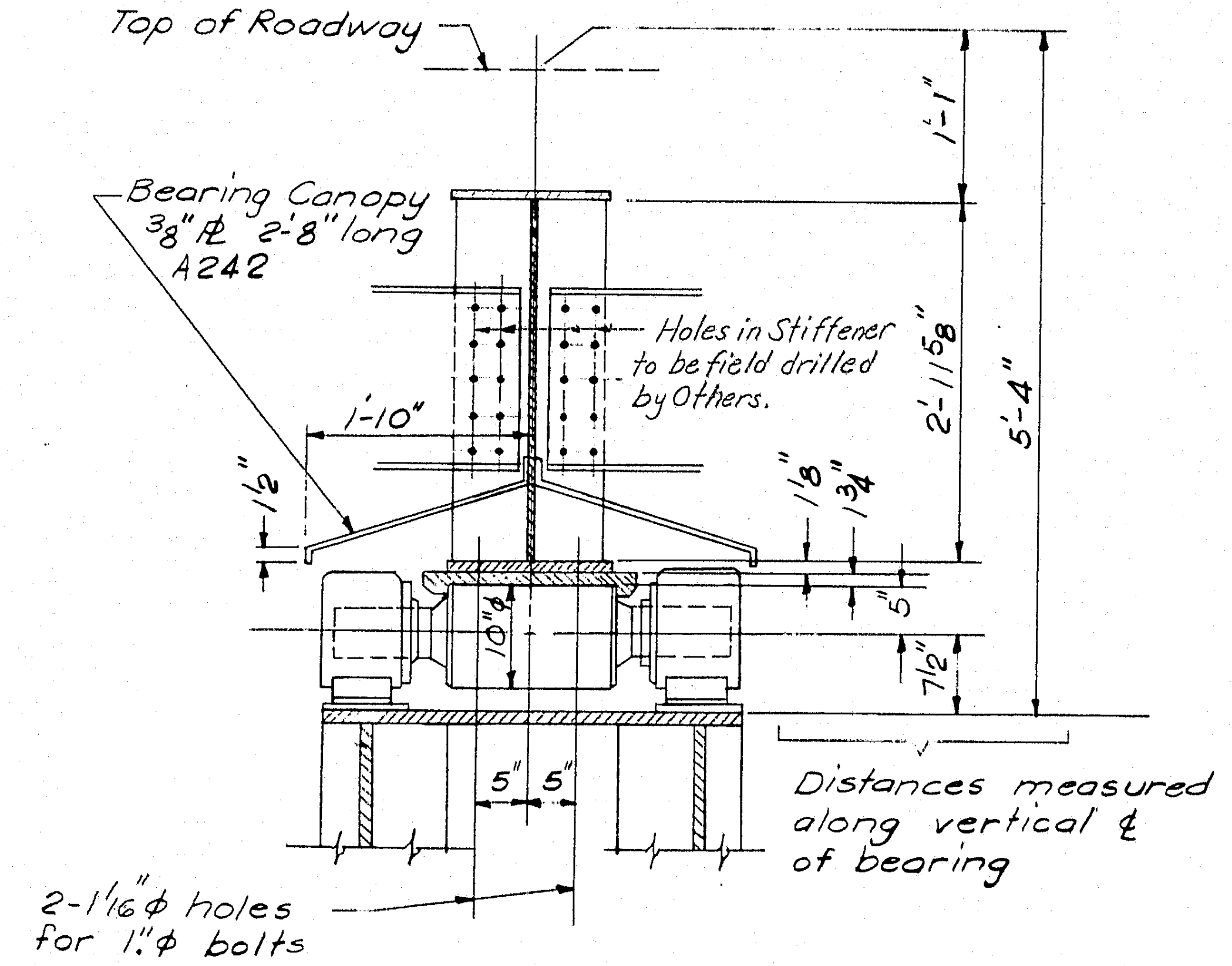
Top of Roadway
Bearing Canopy ⅜" ℞ 2'-8" long A242
Holes in Stiffener to be field drilled by Others.
1'-10"
1'-1"
2'-11⅝"
5'-4"
½"
⅛"
¾"
5"
10⅝"
7½"
5"
5"
Distances measured along vertical ℄ of bearing
2-1 1/16" ɸ holes for 1" ɸ bolts

SECTION B-B

Scale: ¾" = 1'-0"

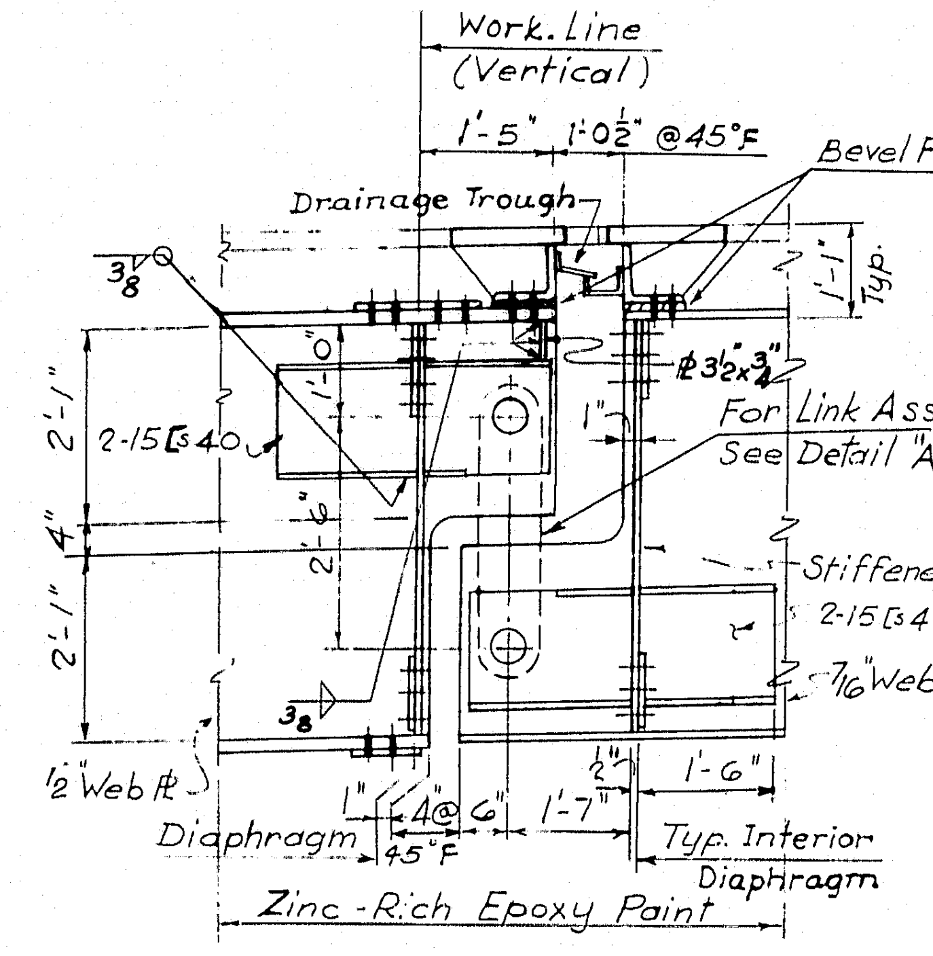
Work. Line (Vertical)
1'-5"
1'-0½" @ 45°F
Bevel Fills
Drainage Trough
⅜
1'-1" Typ.
2'-1"
2-15 [s 40
1'-0"
℞ 3½" x ¾"
1"
For Link Assy. See Detail "A"
4"
2'-6"
Stiffeners
2-15 [s 40
2'-1"
7/16" Web ℞
⅜
½" Web ℞
½"
1'-6"
1"
4 @ 6"
1'-7"
Diaphragm
45°F
Typ. Interior Diaphragm
Zinc-Rich Epoxy Paint

SECTION G-G

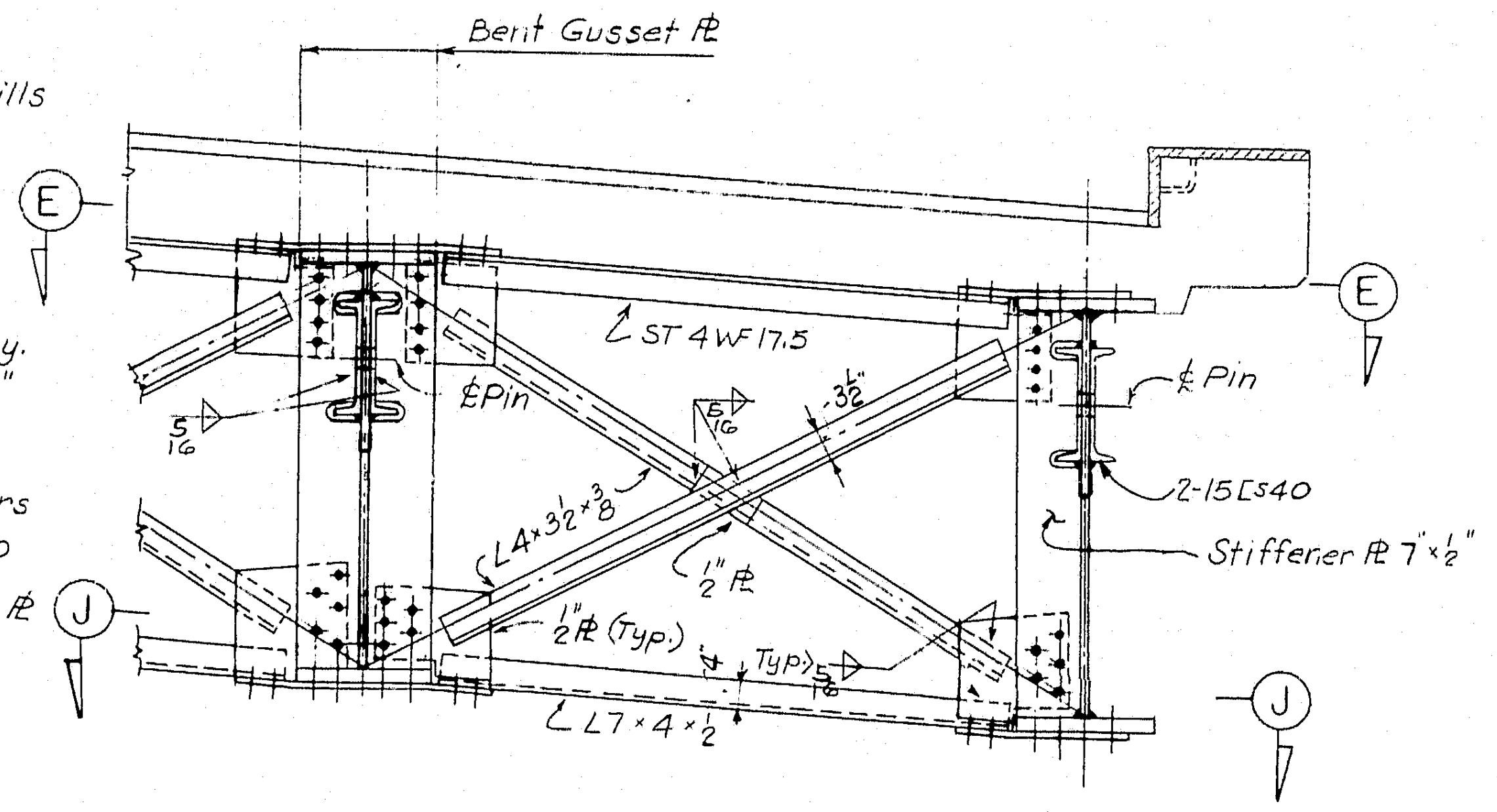
Bent Gusset ℞
E
E
ST 4 WF 17.5
℄ Pin
℄ Pin
5/16
5/16
3½"
2-15 [s 40
L 4 x 3½ x ⅜
½" ℞
Stiffener ℞ 7" x ½"
J
½" ℞ (Typ.)
4"
Typ.
5/16
L 7 x 4 x ½
J

SECTION F-F

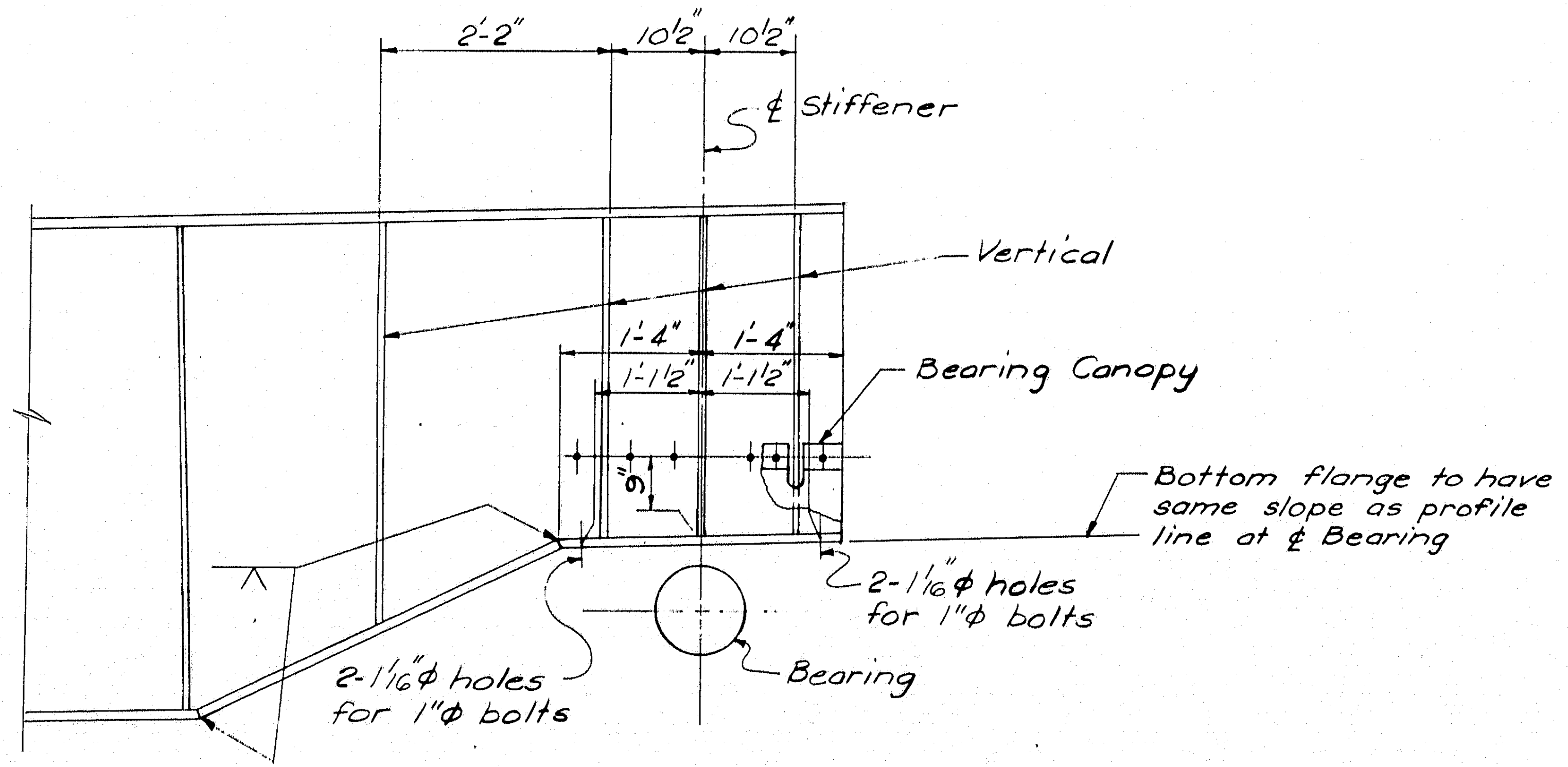
2'-2"
10½"
10½"
℄ Stiffener
Vertical
1'-4"
1'-4"
1'-1½"
1'-1½"
Bearing Canopy
9"
Bottom flange to have same slope as profile line at ℄ Bearing
2-1 1/16" ɸ holes for 1" ɸ bolts
2-1 1/16" ɸ holes for 1" ɸ bolts
Bearing

TYPE "G" STRINGER

END DETAILS

Scale: ¾" = 1'-0"

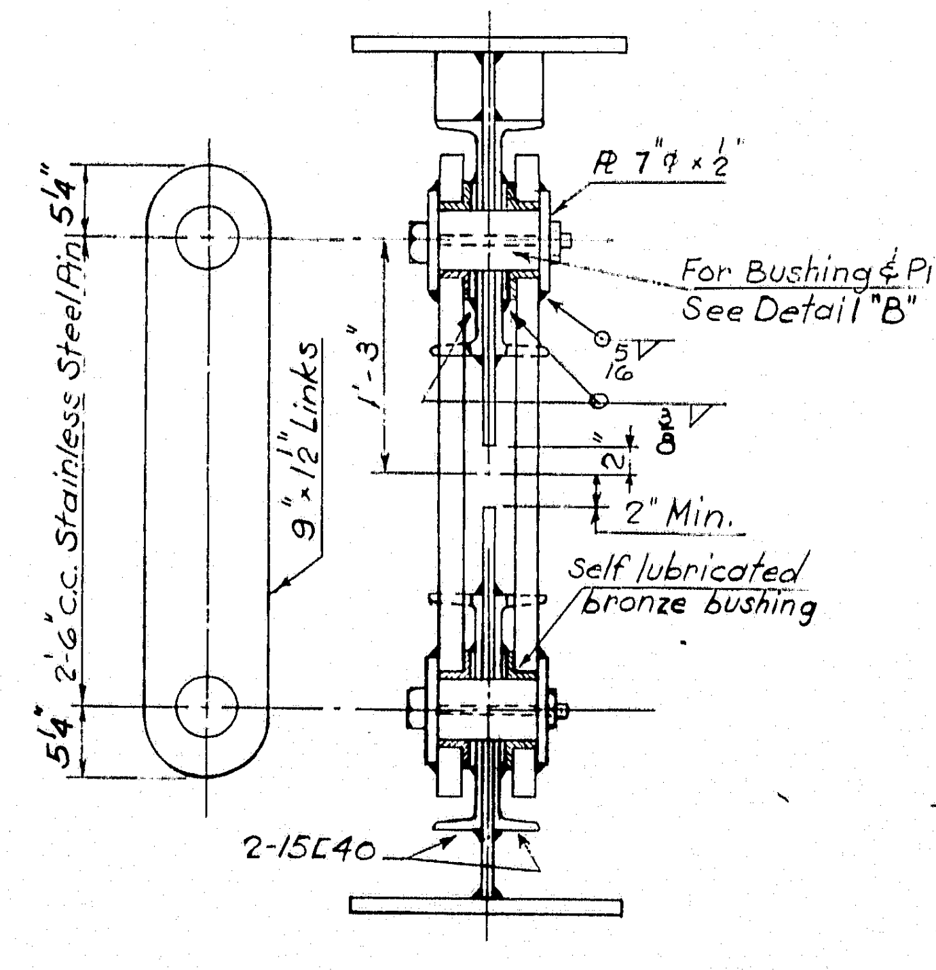
5¼"
2'-6" c.c. Stainless Steel Pin
5¼"
9" x 1½" Links
℞ 7" ɸ x ½"
For Bushing & Pin See Detail "B"
1'-3"
5/16
⅜
½"
2" Min.
Self lubricated bronze bushing
2-15 [40

DETAIL "A"

SCALE: 1" = 1'-0"

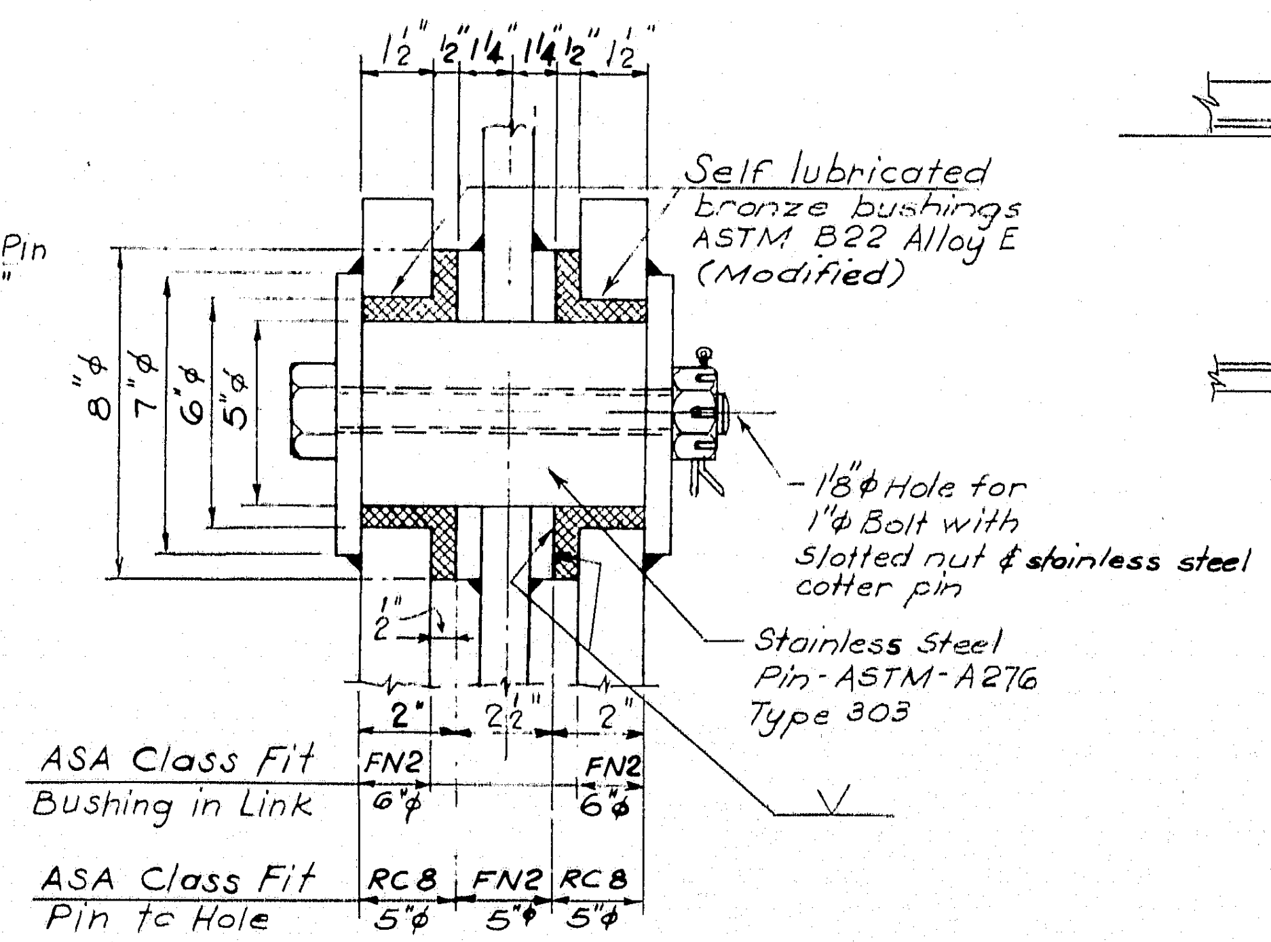
1½"
½"
1¼"
1¼"
½"
1½"
Self lubricated bronze bushings ASTM B22 Alloy E (Modified)
8" ɸ
7" ɸ
6" ɸ
5" ɸ
1⅛" ɸ Hole for 1" ɸ Bolt with slotted nut & stainless steel cotter pin
½"
Stainless Steel Pin - ASTM - A276 Type 303
2"
2½"
2"
ASA Class Fit
Bushing in Link
FN2
6" ɸ
FN2
6" ɸ
ASA Class Fit
Pin to Hole
RC8
5" ɸ
FN2
5" ɸ
RC8
5" ɸ

DETAIL "B"

SCALE: 3" = 1'- 0"

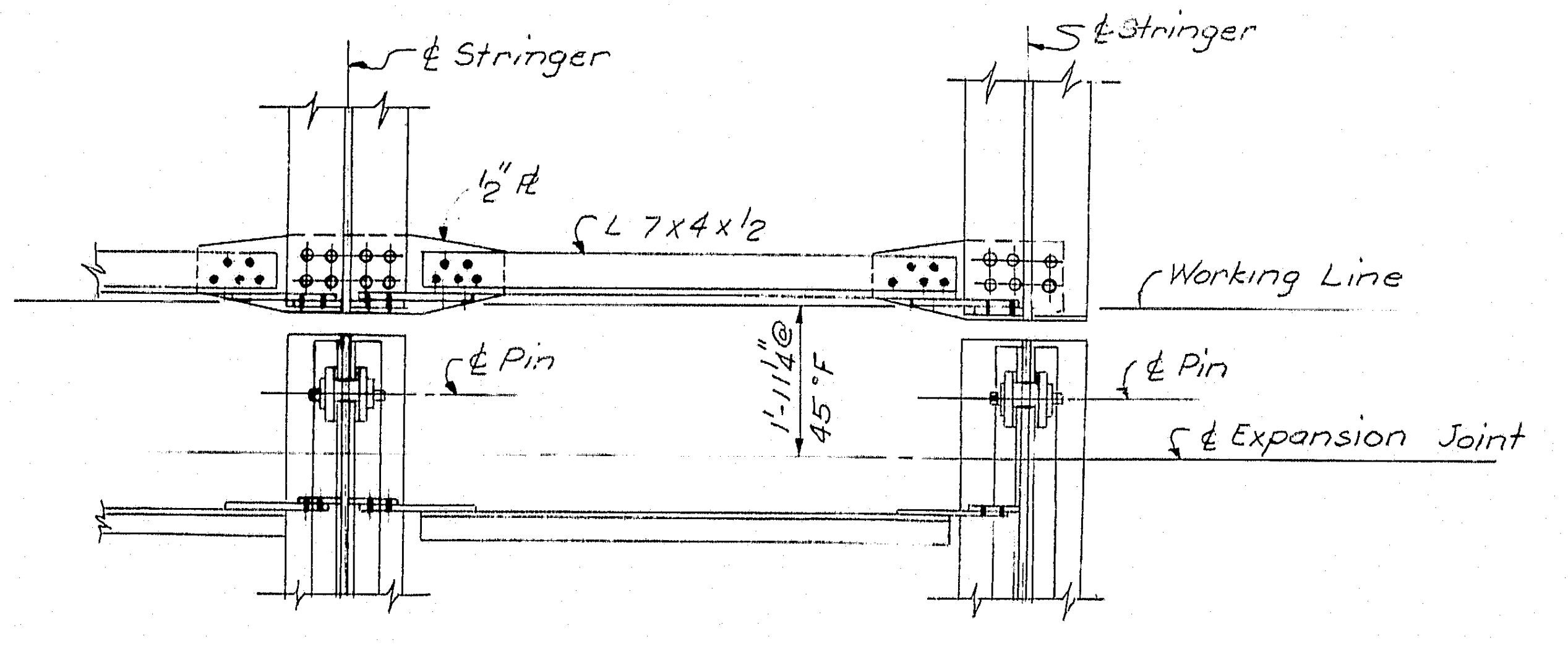
℄ Stringer
℄ Stringer
½" ℞
L 7 x 4 x ½
Working Line
℄ Pin
℄ Pin
1'-1¼" @ 45°F
℄ Expansion Joint

SECTION J-J

2

DESIGN — Alex Krywoschy
TRACE — A. J. Mostowicz
CHECK — S. B. Mishimura

BRIDGE NO.
IN CHARGE OF — R. W. Christie

NEW HAMPSHIRE
DEPARTMENT OF PUBLIC WORKS AND HIGHWAYS
AND
MAINE STATE HIGHWAY COMMISSION
INTERSTATE 95 BRIDGE
OVER
PISCATAQUA RIVER
BETWEEN
PORTSMOUTH, NEW HAMPSHIRE AND KITTERY, MAINE
APPROACH SPANS

STEEL DETAILS I

SHEET 13 OF 14

HARDESTY & HANOVER
CONSULTING ENGINEERS
NEW YORK, N. Y.

129-27

B. P. R. REG. NO.	STATE	PROJECT NUMBER	SHEET NO.	TOTAL SHEETS
1	MAINE	I-95-1(22)16	14	14

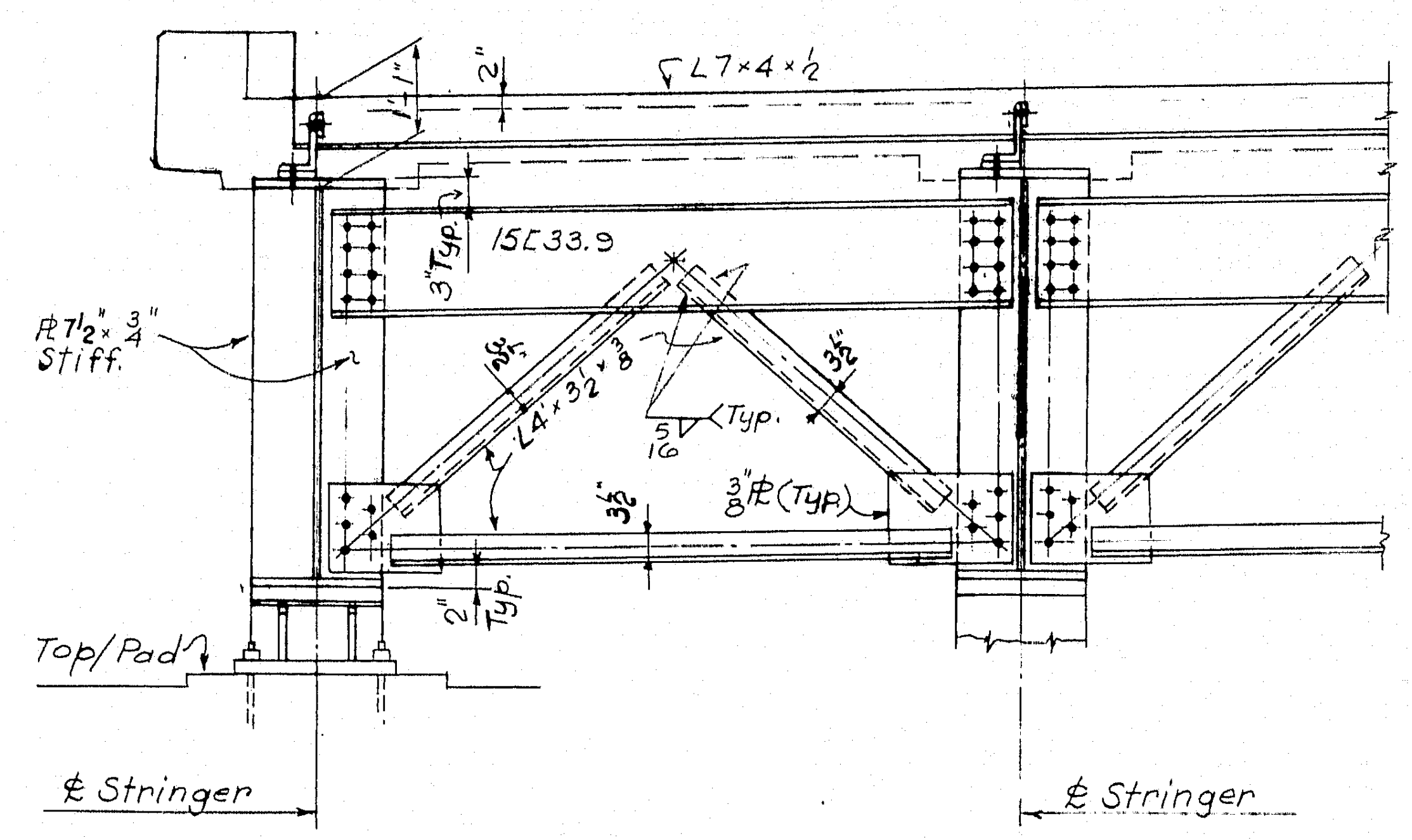

└L7×4×½
2"
1½"
15[33.9
3" Typ.
℞7½"×¾" Stiff.
L4"×3½"×⅜
3½"
5/16 Typ.
⅜"℞ (Typ.)
3½"
2" Typ.
Top/Pad
¢ Stringer
¢ Stringer

TYPICAL DIAPHRAGM AT ABUTMENTS

SCALE: ½" = 1'-0" (TYP. UNLESS NOTED)

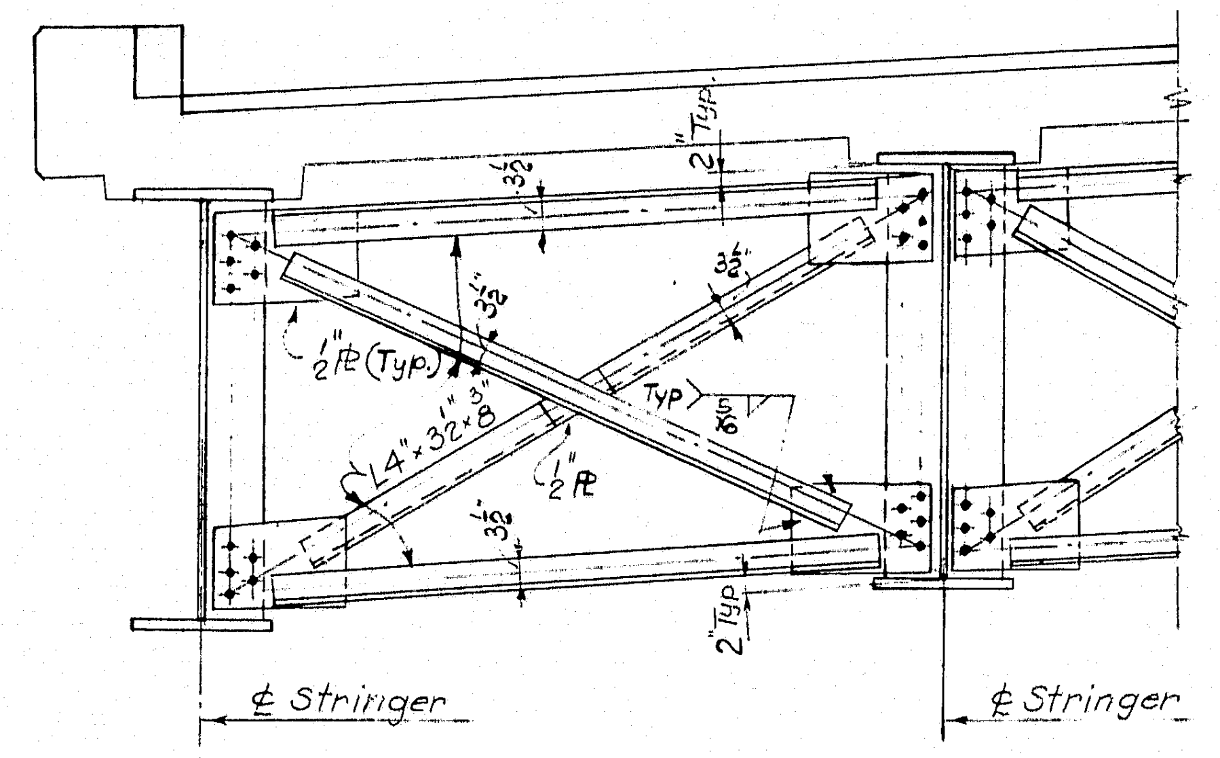

2" Typ.
3½"
3½"
½"℞ (Typ.)
Typ. 5/16
L4"×3½"×⅜"
½"℞
3½"
2" Typ.
¢ Stringer
¢ Stringer

TYPICAL INTERIOR DIAPHRAGM

(On Typical Interior Diaphragms adjacent to expansion joints, field drill bolt holes after alignment of hanger links.)

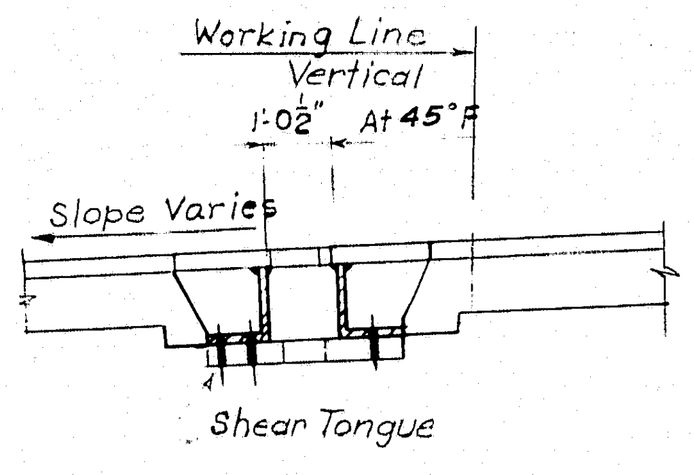

Working Line
Vertical
1'-0½"
At 45°F
Slope Varies
Shear Tongue

SECTION L-L

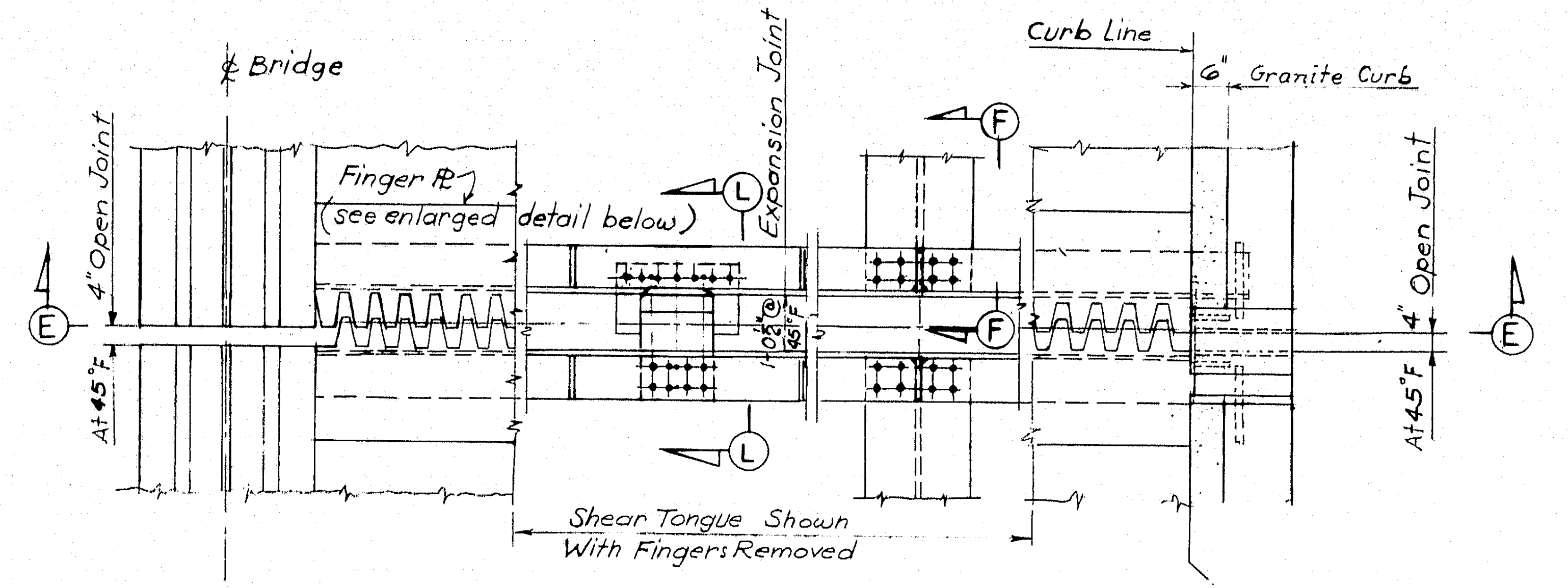

¢ Bridge
Expansion Joint
Curb Line
6" Granite Curb
Finger ℞ (see enlarged detail below)
4" Open Joint
At 45°F
E
L
F
1'-0½" @ 45°F
4" Open Joint
At 45°F
Shear Tongue Shown With Fingers Removed

TYPICAL PLAN OF EXPANSION JOINT

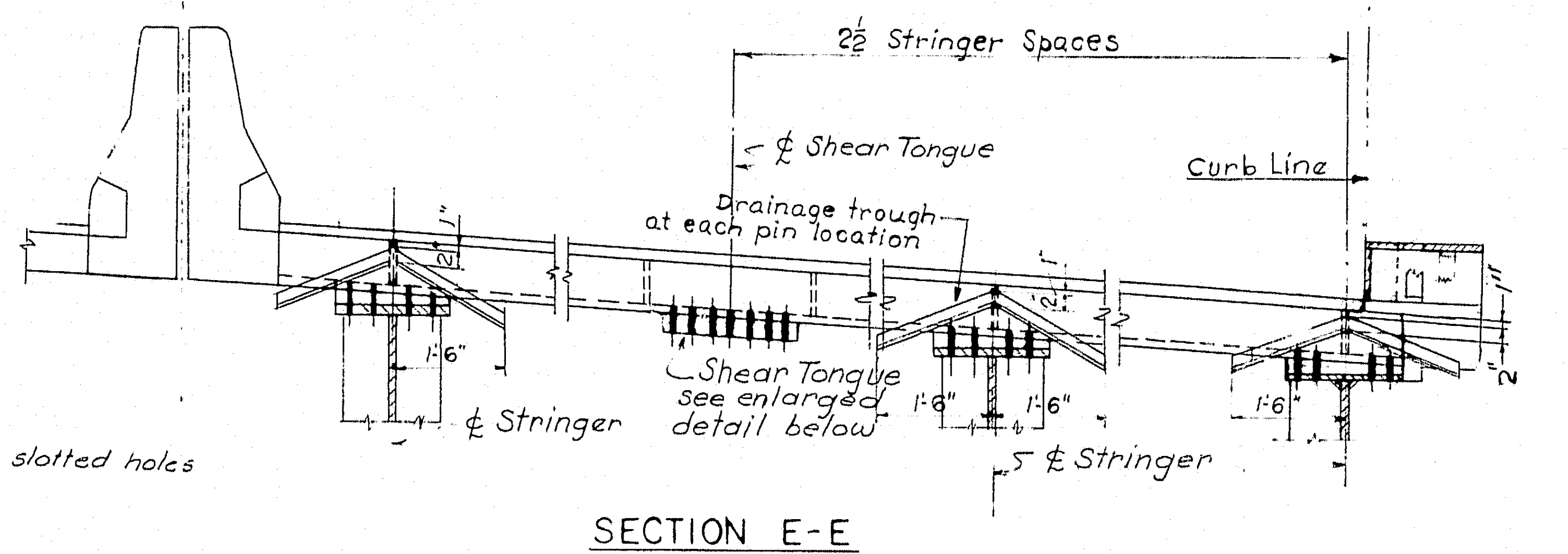

2½ Stringer Spaces
¢ Shear Tongue
Curb Line
Drainage trough at each pin location
1'-6"
¢ Stringer
Shear Tongue see enlarged detail below
1'-6"
1'-6"
1'-6"
¢ Stringer
1½"
2"

SECTION E-E

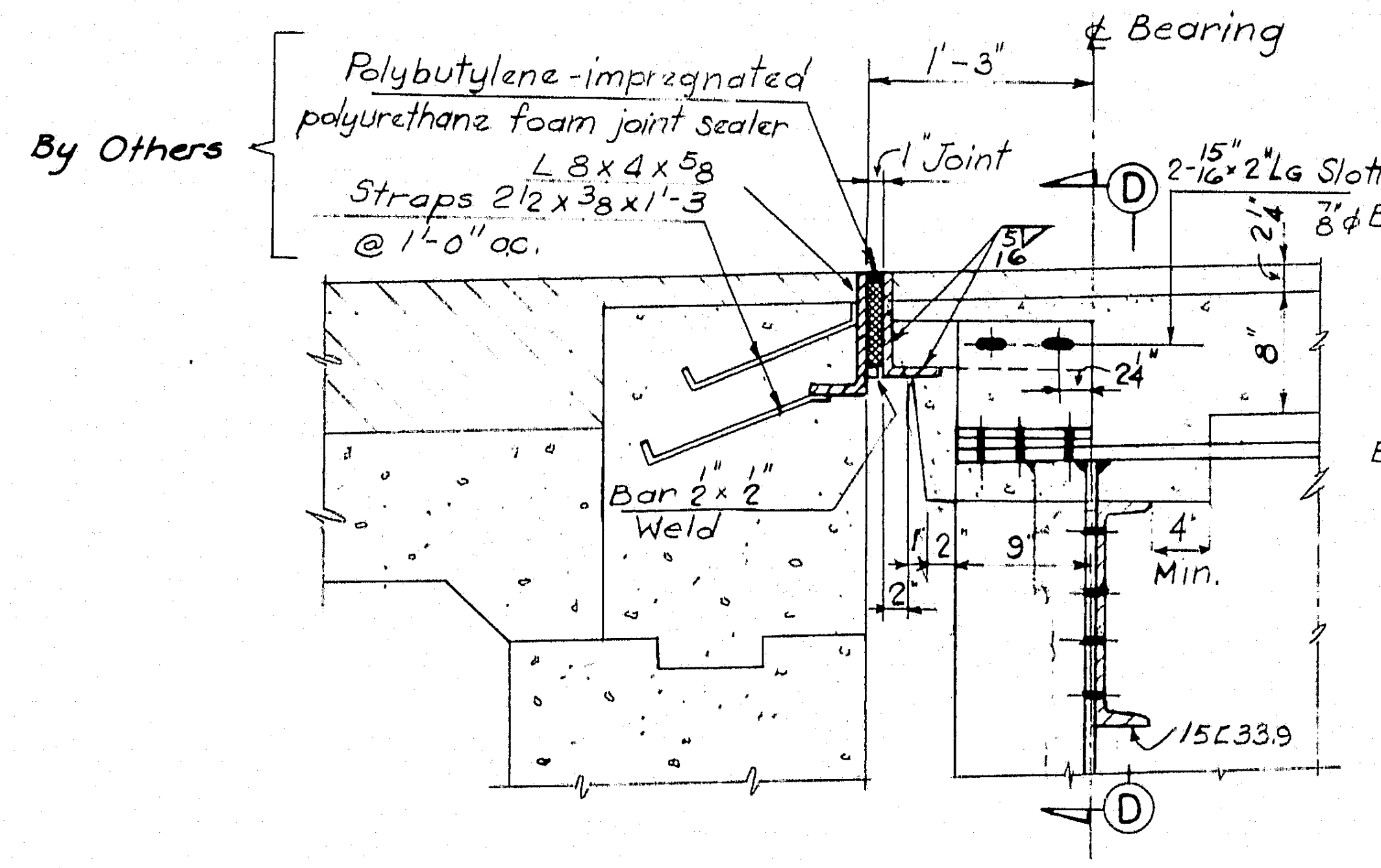

By Others
Polybutylene-impregnated polyurethane foam joint sealer
L 8×4×⅝
Straps 2½×⅜×1'-3 @ 1'-0" o.c.
1'-3"
¢ Bearing
1" Joint
D
5/16
2-15/16"×2" Lg Slotted holes for ⅞"φ Bolts
2¼"
8"
2¼"
Bar ½"×½" Weld
2"
9"
4" Min.
2"
15[33.9

JOINT DETAIL AT ABUTMENTS

SCALE: 1" = 1'-0"

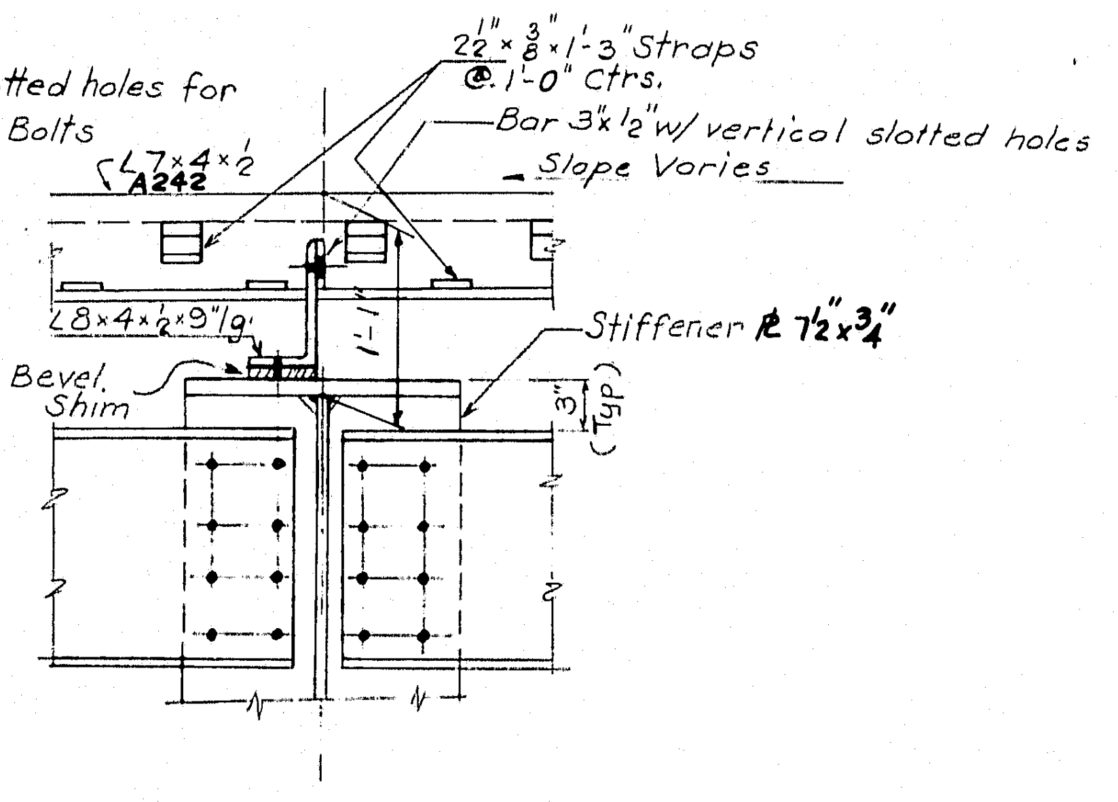

2½"×⅜"×1'-3" Straps @ 1'-0" Ctrs.
Bar 3"×½" w/ vertical slotted holes
Slope Varies
L7×4×½ A242
L8×4×½×9" lg.
1'-1"
Bevel Shim
Stiffener ℞ 7½"×¾"
3" (Typ.)

SECTION D-D

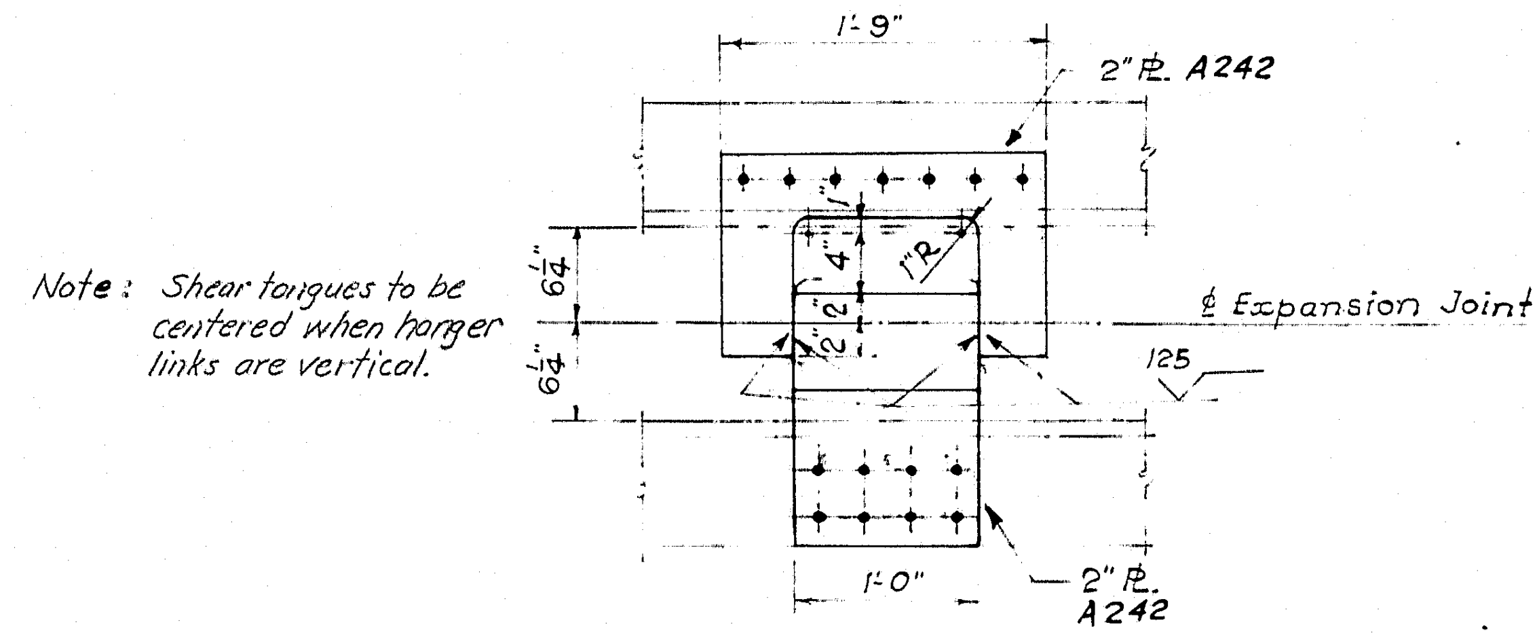

1'-9"
2" ℞ A242
Note: Shear tongues to be centered when hanger links are vertical.
6¼"
6¼"
1"
4"
2"
2"
1"R
¢ Expansion Joint
125
1'-0"
2" ℞ A242

SHEAR TONGUE DETAIL

Scale: 1" = 1'-0"

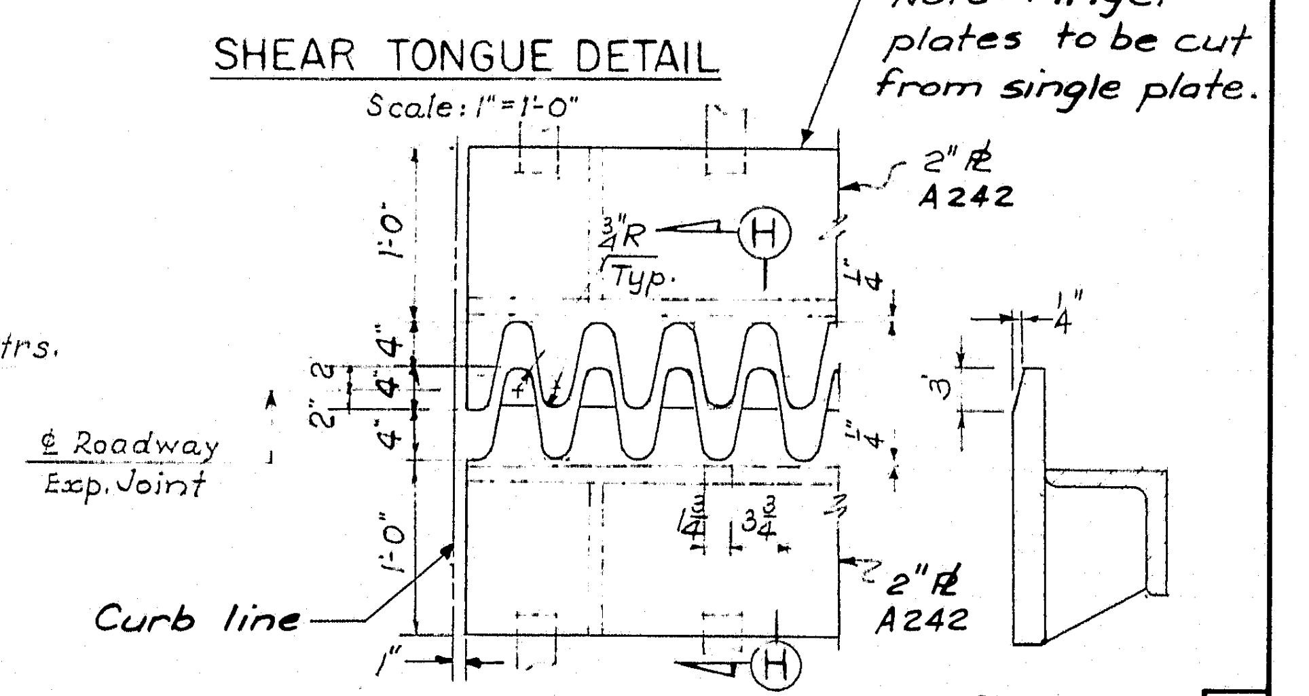

Note: Finger plates to be cut from single plate.
2" ℞ A242
¾"R Typ.
H
1'-0"
4"
4"
4"
2"
2"
¢ Roadway Exp. Joint
1¼"
1¼"
1¾
3¾
1'-0"
Curb line
1"
2" ℞ A242
¼"
3"

FINGER JOINT DETAIL

SECT. H-H

2

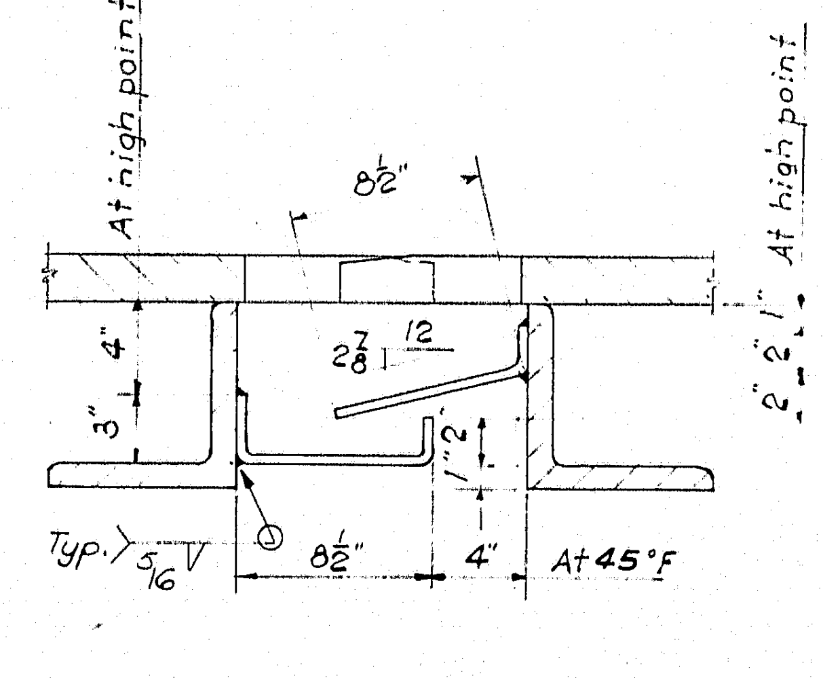

At high point
At high point
8½"
2⅞
12
4"
3"
1½"
2" 2" 1"
Typ. 5/16
8½"
4"
At 45°F

DETAIL OF DRAINAGE TROUGH

Scale: 1½" = 1'-0"

Trough material: ⅜" bent ℞s. - "Corrosion Resisting" ASTM A242 Steel

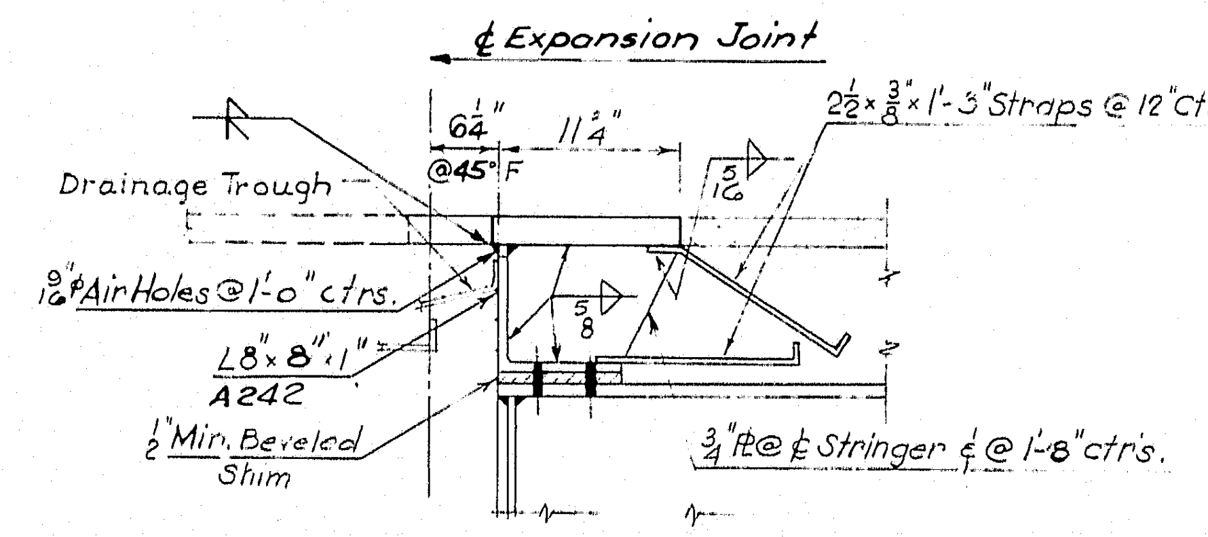

¢ Expansion Joint
6¼" @ 45°F
11¼"
2½×⅜"×1'-3" Straps @ 12" Ctrs.
Drainage Trough
5/16
9/16"φ Air Holes @ 1'-0" ctrs.
5/8
L8"×8"×1" A242
½" Min. Beveled Shim
¾"℞ @ ¢ Stringer ¢ @ 1'-8" ctrs.

SECTION F-F

DESIGN — alex Krywoschy
TRACE — a.J. Mostowicz
CHECK — S.S. Nishimura

BRIDGE NO.
IN CHARGE OF — R.W. Christie

NEW HAMPSHIRE
DEPARTMENT OF PUBLIC WORKS AND HIGHWAYS
AND
MAINE STATE HIGHWAY COMMISSION
INTERSTATE 95 BRIDGE
OVER
PISCATAQUA RIVER
BETWEEN
PORTSMOUTH, NEW HAMPSHIRE AND KITTERY, MAINE
APPROACH SPANS

STEEL DETAILS II

SHEET 14 OF 14

HARDESTY & HANOVER
CONSULTING ENGINEERS
NEW YORK, N. Y.

129-28

B.P.R. REG. NO.	STATE	PROJECT NUMBER	SHEET NO.	TOTAL SHEETS
1	MAINE	I-95-1(22)16	1	23

NEW HAMPSHIRE DEPARTMENT OF PUBLIC WORKS AND HIGHWAYS
MAINE STATE HIGHWAY COMMISSION

1776

PISCATAQUA RIVER BRIDGE
INTERSTATE ROUTE 95
PROJECT NO. I-95-1 (22) 16

PORTSMOUTH, NEW HAMPSHIRE
COUNTY OF ROCKINGHAM

TO

KITTERY, MAINE
COUNTY OF YORK

LENGTH OF PROJECT 0.853 MILES
CONTRACT NO. 3 - NEW HAMPSHIRE APPROACH STRUCTURAL STEEL

SPECIFICATIONS

1. MAINE STATE HIGHWAY COMMISSION. REVISION OF JUNE, 1965
2. SPECIAL PROVISIONS.
3. SUPPLEMENTAL SPECIFICATIONS.

TRAFFIC

AADT 1990 38,580
DHV 6,560
T .... 1 %
D .... 70 %
V .... 70 MPH

SHEET	TITLE
1	COVER SHEET
2	GENERAL NOTES & QUANTITY SUMMARY
3	PROJECT PLAN AND ELEVATION
4 - 5	GENERAL PLAN AND ELEVATION
6	TYPICAL SECTIONS
7	DECK GEOMETRY
8 - 15	DECK FRAMING PLANS
16 - 17	STRINGERS
18	STRINGER DATA
19	SHOES AND LATERALS
20 - 22	STEEL DETAILS
23	SIGN SUPPORTS

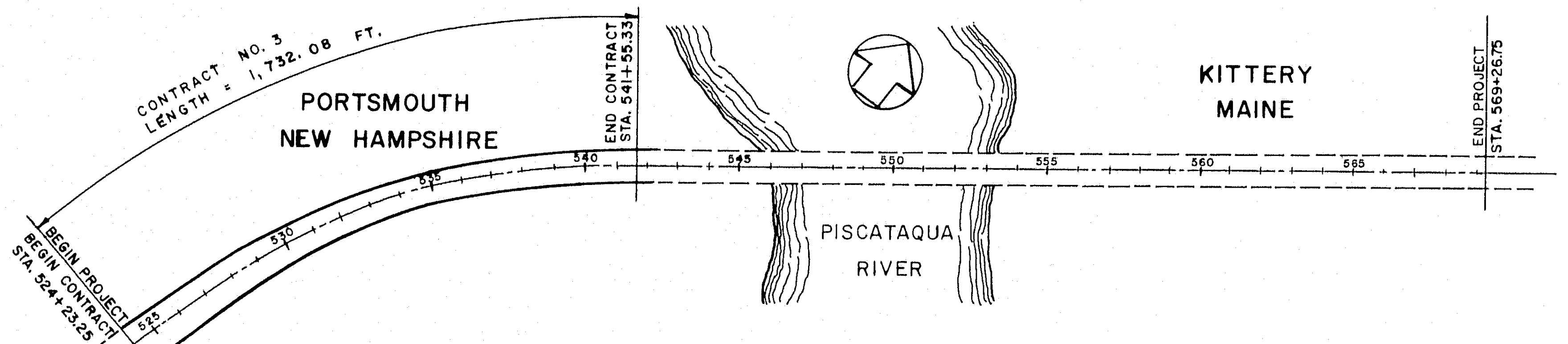
CONTRACT NO. 3
LENGTH = 1,732.08 FT.
PORTSMOUTH
NEW HAMPSHIRE
END CONTRACT
STA. 541+55.33
KITTERY
MAINE
END PROJECT
STA. 569+26.75
BEGIN PROJECT
BEGIN CONTRACT
STA. 524+23.25
525
530
535
540
545
550
555
560
565
PISCATAQUA
RIVER

KEY PLAN

SCALE: 1" = 400'

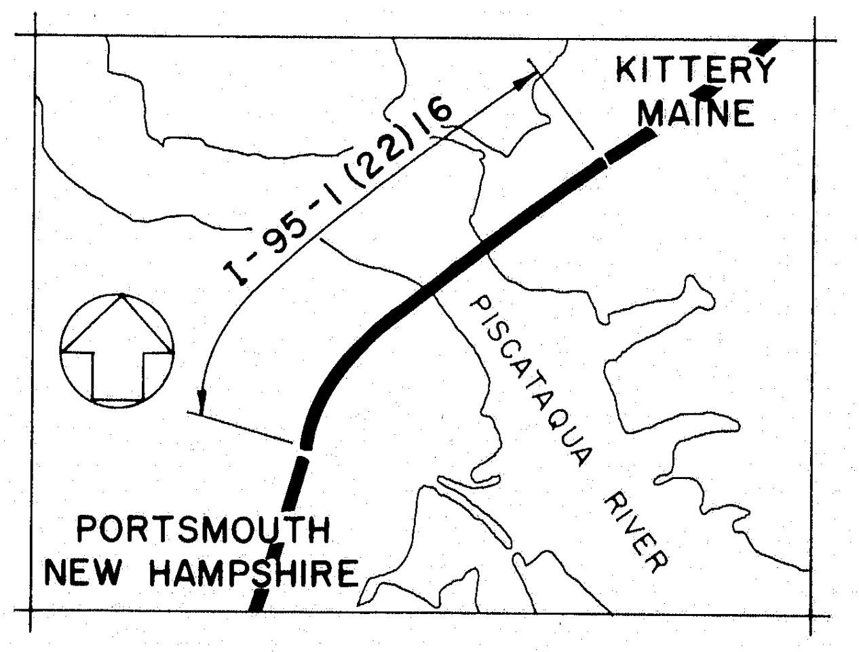
KITTERY
MAINE
I-95-1 (22) 16
PISCATAQUA RIVER
PORTSMOUTH
NEW HAMPSHIRE

LOCATION MAP

SCALE: 1"=2000'

APPROVED
NEW HAMPSHIRE DEPARTMENT OF
PUBLIC WORKS AND HIGHWAYS

John O. Morton
COMMISSIONER

Russel W. Wett
ASSISTANT CHIEF ENGINEER

10/3/68
DATE

APPROVED
MAINE STATE HIGHWAY COMMISSION

David H. Stevens
CHAIRMAN

Steven D. Shaw

Bertrand G. Lachance

Sylvester L. Poor
CHIEF ENGINEER

February 5, 1969
DATE

PREPARED BY

HARDESTY & HANOVER
CONSULTING ENGINEERS
NEW YORK, NEW YORK

SYLVESTER L. POOR 187

John J. Fiala

SEPTEMBER 25, 1968.
DATE

AS BUILT
JHW 25 April '73

DEPARTMENT OF TRANSPORTATION
FEDERAL HIGHWAY ADMINISTRATION
BUREAU OF PUBLIC ROADS
REGION 1

APPROVED

DIVISION ENGINEER
DATE

129-29

B. P. R. REG. NO.	STATE	PROJECT NUMBER	SHEET NO.	TOTAL SHEETS
1	MAINE	I-95-1(22)16	2	23

SPECIFICATIONS

THE FOLLOWING SPECIFICATIONS GOVERN THE DESIGN AND CONSTRUCTION OF THIS PROJECT:

DESIGN
  AMERICAN ASSOCIATION OF STATE HIGHWAY OFFICIALS, NINTH EDITION, 1965
  STANDARD SPECIFICATIONS FOR HIGHWAY BRIDGES

  AMERICAN WELDING SOCIETY
  SPECIFICATIONS FOR WELDED HIGHWAY AND RAILWAY BRIDGES
    AWS D2.0-66 AND SUPPLEMENTS

CONSTRUCTION
  STATE OF MAINE, STATE HIGHWAY COMMISSION
    STANDARD SPECIFICATIONS - HIGHWAY AND BRIDGES
      REVISION OF JUNE 1965
    SUPPLEMENTAL SPECIFICATIONS
    SPECIAL PROVISIONS FOR THE PROJECT

DESIGN CRITERIA

DESIGN SPEED = 70 MPH
MINIMUM STOPPING SIGHT DISTANCE = 600 FEET
VERTICAL NAVIGATION CLEARANCE ABOVE MEAN HIGH WATER 135'-0"
LIVE LOAD
  CASE I — AASHO HS-20-44 WITH ALLOWABLE UNIT STRESSES DETERMINED BY THE CRITERIA FOR FATIGUE
  CASE II — AASHO HS-20-44 INCREASED BY 100% WITH ALLOWABLE UNIT STRESSES OF 150% OF BASIC STRESSES
  CASE III — MILITARY TANDEM AXLE LOAD OF TWO 24,000 POUND AXLES SPACED 4'-0" APART WITH ALLOWABLE UNIT STRESSES EQUAL TO BASIC STRESSES
WIND LOAD
  GIRDER SPANS 50 POUNDS PER SQUARE FOOT ON THE PROJECTED AREA OF THE SUPERSTRUCTURE

DIMENSIONS

ALL DIMENSIONS SHOWN IN PLAN VIEWS ARE HORIZONTAL AND AT A TEMPERATURE OF 45°F.

DESIGN STRESSES

BASIC STRESSES ARE AS FOLLOWS:

STRUCTURAL STEEL	A36
TENSION	20,000 PSI
COMPRESSION (BEAMS)	$20{,}000 - 7.5\,(L/B)^2$ PSI
SHEAR (WEBS)	12,000 PSI
BOLTS (7/8" BOLTS IN SINGLE SHEAR) (FRICTION TYPE)	8,000 LBS. PER BOLT

STRUCTURAL STEEL

1. METAL IN THE SUPERSTRUCTURE SHALL CONFORM TO THE FOLLOWING ASTM SPECIFICATIONS:

STRINGERS	A36
DIAPHRAGMS	A36
SHOES	AS DETAILED ON PLANS
EXPANSION LINK BUSHINGS	B22 ALLOY E (MODIFIED)
EXPANSION JOINTS	A242 (CORROSION RESISTANT) (WELDABLE)
BOLTS	A325

2. TYPE OF FABRICATION

STRUCTURAL STEEL SHALL, IN GENERAL, BE SHOP WELDED AND SHOP AND FIELD BOLTED USING HIGH STRENGTH BOLTS.

3. BOLTS

BOLTS SHALL BE 7/8" DIAMETER A325 BOLTS. MINIMUM BOLT SPACING SHALL BE 3" CENTER TO CENTER

4. CAMBER

STRINGERS SHALL BE CAMBERED FOR FULL DEAD LOAD PLUS VERTICAL CURVE.

5. PAINTING

THE STRUCTURAL STEEL SHALL BE GIVEN ONE SHOP COAT OF PAINT AND ONE TOUCH-UP COAT OF PAINT IN THE FIELD.

STRUCTURAL STEEL ADJACENT TO EXPANSION JOINTS AND BELOW DECK LEVEL SHALL BE PAINTED WITH ONE COAT OF ZINC RICH EPOXY COATING.

QUANTITY SUMMARY

ITEM NO.	DESCRIPTION	UNIT
504.701	STRUCTURAL STEEL, FABRICATED AND DELIVERED	L.S.
504.711	STRUCTURAL STEEL, ERECTION	L.S.

STRUCTURAL STEEL BREAKDOWN (POUNDS)

ITEM 504.701 STRUCTURAL STEEL, FABRICATED AND DELIVERED

	A36	A242 CORROSION RESISTANT	SPECIAL
STRINGERS	5,759,000		
BRACING & DIAPHRAGMS	755,000		
SHOES	54,000		117,000
EXPANSION JOINTS	29,000	150,000	22,000
SUB-TOTAL	6,597,000	150,000	139,000
TOTAL	6,886,000		

ITEM 504.711 STRUCTURAL STEEL, ERECTION	
STRINGERS	5,543,000
BRACING & DIAPHRAGMS	730,000
SHOES	171,000
EXPANSION JOINTS	192,000
TOTAL	6,636,000

3

DESIGN —
TRACE — M. Deuler
CHECK — S. Nishimura

BRIDGE NO.
IN CHARGE OF — R.W. Christie

NEW HAMPSHIRE
DEPARTMENT OF PUBLIC WORKS AND HIGHWAYS
AND
MAINE STATE HIGHWAY COMMISSION
INTERSTATE 95 BRIDGE
OVER
PISCATAQUA RIVER
BETWEEN
PORTSMOUTH, NEW HAMPSHIRE AND KITTERY, MAINE

HARDESTY & HANOVER
CONSULTING ENGINEERS
NEW YORK, N. Y.

GENERAL NOTES
QUANTITY SUMMARY

SHEET 2 OF 23

12.9-30

B. P. R. REG. NO.	STATE	PROJECT NUMBER	SHEET NO.	TOTAL SHEETS
1	MAINE	I-95-1(22)16	3	23

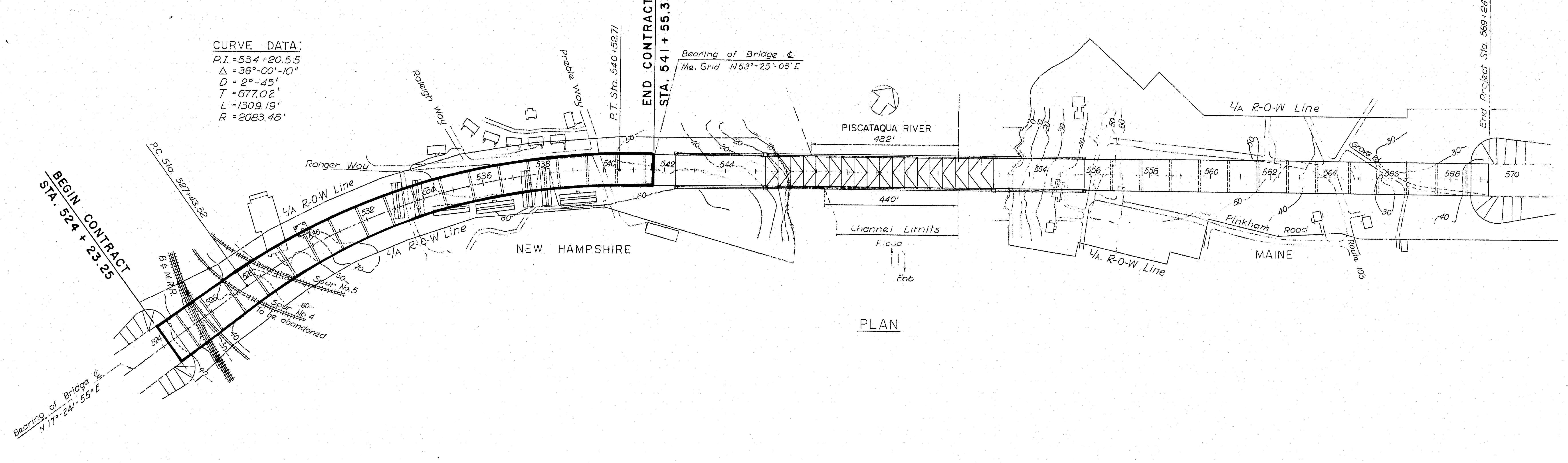
CURVE DATA:
P.I. = 534+20.55
Δ = 36°-00'-10"
D = 2°-45'
T = 677.02'
L = 1309.19'
R = 2083.48'
BEGIN CONTRACT
STA. 524 + 23.25
END CONTRACT
STA. 541 + 55.33
P.C. Sta. 527+43.52
P.T. Sta. 540+52.71
Bearing of Bridge ℄
Me. Grid N53°-25'-05'E
Bearing of Bridge ℄
N 17°-24'-55"E
Raleigh Way
Preble Way
Ranger Way
L/A R-O-W Line
L/A R-O-W Line
B&M.R.R.
Spur No. 5
Spur No. 4
To be abandoned
NEW HAMPSHIRE
524
526
528
530
532
534
536
538
540
542
544
554
556
558
560
562
564
566
568
570
PISCATAQUA RIVER
482'
440'
Channel Limits
Flood
Ebb
L/A R-O-W Line
L/A R-O-W Line
Grove Rd.
Pinkham Road
Route 103
MAINE
End Project Sta. 569+26.75

PLAN

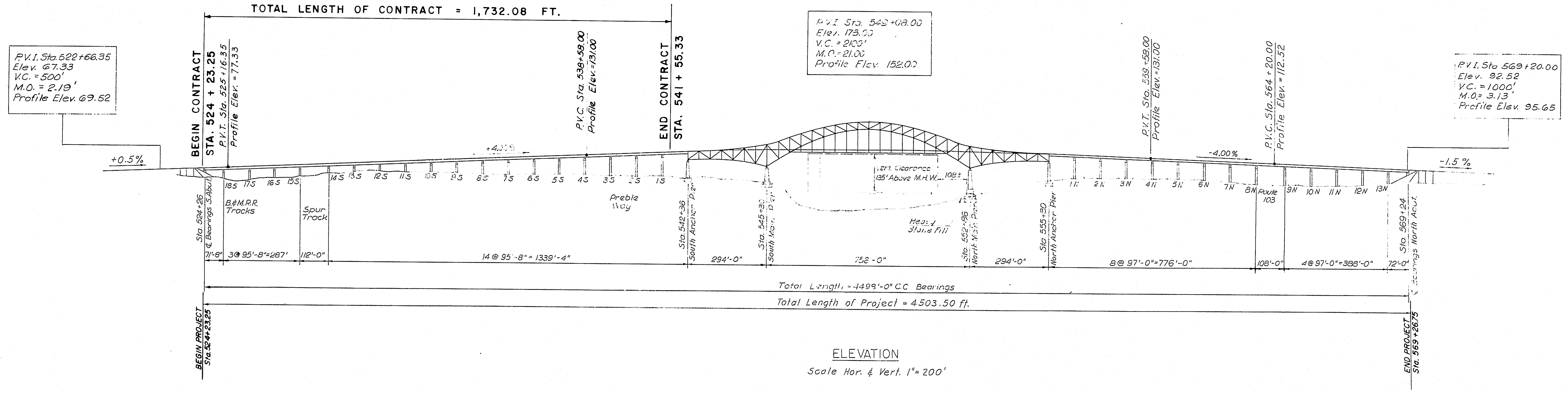
TOTAL LENGTH OF CONTRACT = 1,732.08 FT.
P.V.I. Sta. 522+66.35
Elev. 67.33
V.C. = 500'
M.O. = 2.19'
Profile Elev. 69.52
+0.5%
BEGIN CONTRACT
STA. 524 + 23.25
P.V.T. Sta. 525+16.35
Profile Elev. = 77.33
+4.00%
P.V.C. Sta. 538+58.00
Profile Elev. = 131.00
END CONTRACT
STA. 541 + 55.33
P.V.I. Sta. 549+08.00
Elev. 173.00
V.C. = 2100'
M.O. = 21.00
Profile Elev. 152.00
P.V.T. Sta. 559+58.00
Profile Elev. = 131.00
-4.00%
P.V.C. Sta. 564 + 20.00
Profile Elev. = 112.52
P.V.I. Sta 569+20.00
Elev. 92.52
V.C. = 1000'
M.O. = 3.13'
Profile Elev. 95.65
-1.5%
18S
17S
16S
15S
14S
13S
12S
11S
10S
9S
8S
7S
6S
5S
4S
3S
2S
1S
Preble Way
B.&M.R.R. Tracks
Spur Track
Sta. 524+26 ℄ Bearings S. Abut.
Sta. 542+36 South Anchor Pier
Sta. 545+30 South Main Pier
Vert. Clearance 135' Above M.H.W.
108±
Heavy Stone Fill
Sta. 552+86 North Main Pier
Sta. 555+80 North Anchor Pier
1N
2N
3N
4N
5N
6N
7N
8N
Route 103
9N
10N
11N
12N
13N
Sta. 569+24 ℄ Bearings North Abut.
71'-8"
3@95'-8"=287'
112'-0"
14@95'-8"=1339'-4"
294'-0"
758'-0"
294'-0"
8@97'-0"=776'-0"
108'-0"
4@97'-0"=388'-0"
72'-0"
Total Length = 4499'-0" C.C. Bearings
Total Length of Project = 4503.50 ft.
BEGIN PROJECT
Sta. 524+23.25
END PROJECT
Sta. 569+26.75

ELEVATION

Scale Hor. & Vert. 1"= 200'

3

DESIGN –
TRACE – S. Bradford
CHECK – R.W. Christie

BRIDGE NO.
IN CHARGE OF – R.W. Christie

NEW HAMPSHIRE
DEPARTMENT OF PUBLIC WORKS AND HIGHWAYS
AND
MAINE STATE HIGHWAY COMMISSION
INTERSTATE 95 BRIDGE
OVER
PISCATAQUA RIVER
BETWEEN
PORTSMOUTH, NEW HAMPSHIRE AND KITTERY, MAINE

HARDESTY & HANOVER
CONSULTING ENGINEERS
NEW YORK, N. Y.

PROJECT
PLAN AND ELEVATION

SHEET 3 OF 23

129-31

B. P. R. REG. NO.	STATE	PROJECT NUMBER	SHEET NO.	TOTAL SHEETS
1	MAINE	I - 95 - 1(22)16	4	23

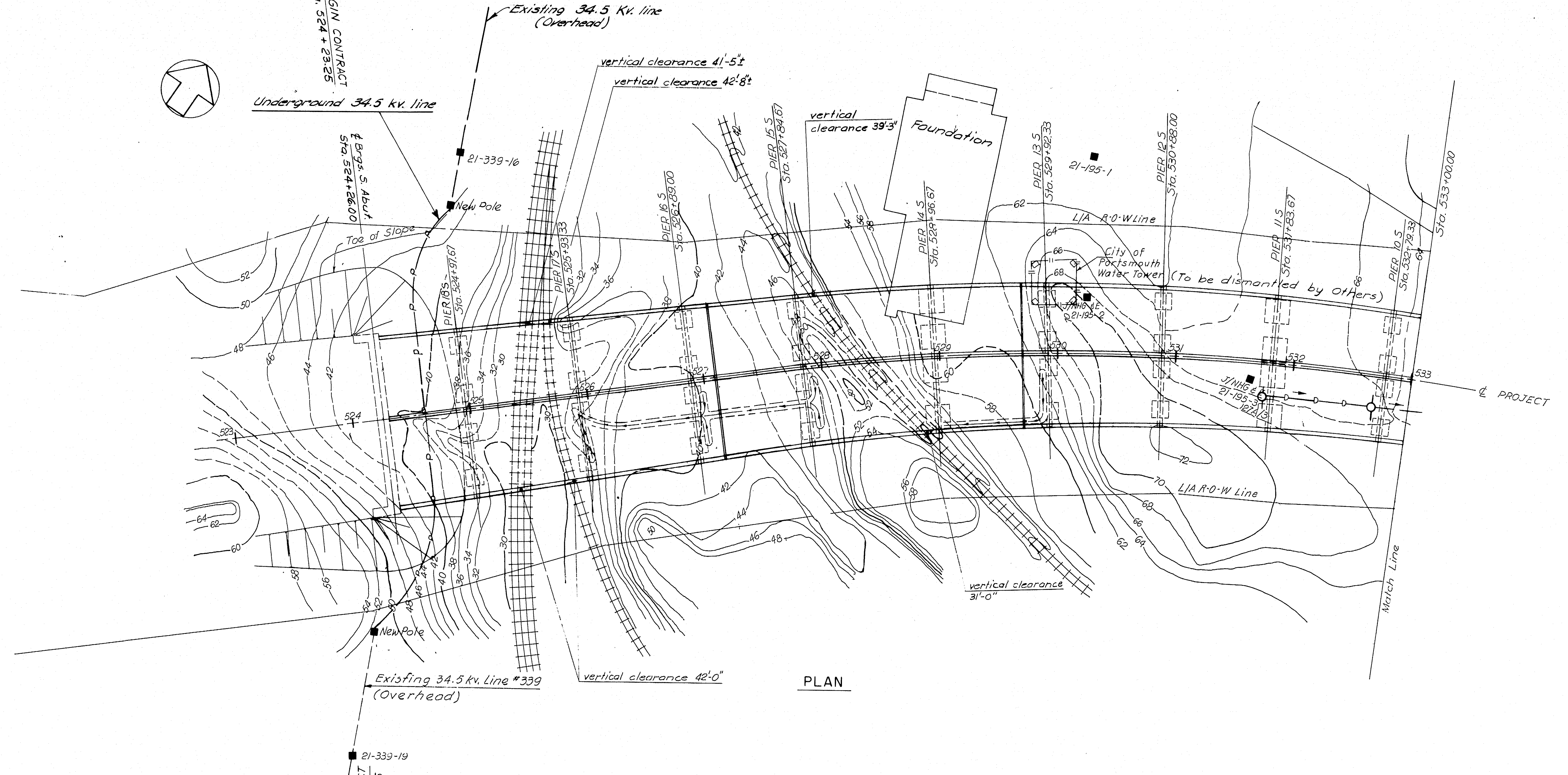
BEGIN CONTRACT Sta. 524+23.25
Existing 34.5 Kv. line (Overhead)
Underground 34.5 kv. line
21-339-16
New Pole
℄ Brgs. S. Abut. Sta. 524+26.00
Toe of Slope
vertical clearance 41'-5"±
vertical clearance 42'-8"±
vertical clearance 39'-3"
Foundation
PIER 18 S Sta. 524+91.61
PIER 17 S Sta. 525+93.33
PIER 16 S Sta. 526+89.00
PIER 15 S Sta. 527+84.61
PIER 14 S Sta. 528+96.67
PIER 13 S Sta. 529+92.33
PIER 12 S Sta. 530+88.00
PIER 11 S Sta. 531+83.67
PIER 10 S Sta. 532+79.33
Sta. 533+00.00
21-195-1
L/A R-O-W Line
City of Portsmouth Water Tower (To be dismantled by Others)
21-195-2
21-195-3
℄ PROJECT
Match Line
vertical clearance 31'-0"
vertical clearance 42'-0"
New Pole
Existing 34.5 kv. Line #339 (Overhead)
21-339-19
523
524
525
526
527
528
529
530
531
532
533

PLAN

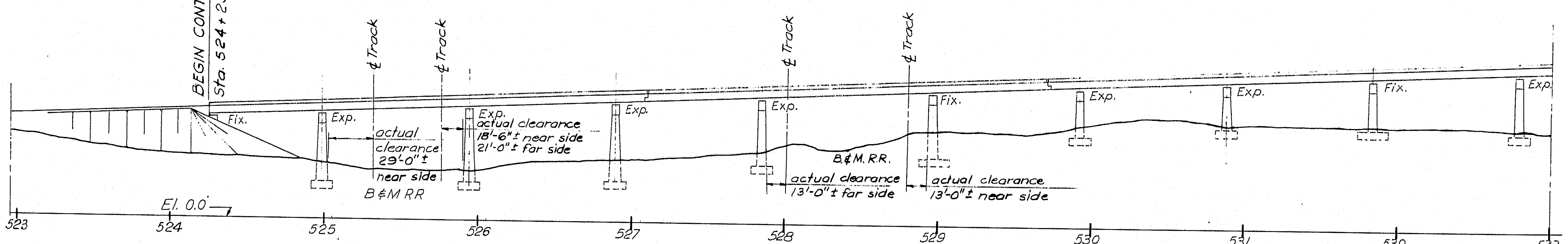
21-339-19
BEGIN CONTRACT Sta. 524+23.25
℄ Track
℄ Track
℄ Track
℄ Track
Fix.
Exp.
actual clearance 29'-0"± near side
B&M RR
Exp.
actual clearance 18'-6"± near side 21'-0"± far side
Exp.
Exp.
B&M.R.R.
actual clearance 13'-0"± far side
Fix.
actual clearance 13'-0"± near side
Exp.
Exp.
Fix.
Exp.
El. 0.0'
523
524
525
526
527
528
529
530
531
532
533

ELEVATION

Scale Horiz. & Vert. : 1"= 50'

NOTE:

All construction, relocation, and abandoning of utilities shall be performed by Others.

3

DESIGN —
TRACE — S. Bradford
CHECK — H. R. Cattley + R. W. Christie

BRIDGE NO.
IN CHARGE OF — R. W. Christie

HARDESTY & HANOVER
CONSULTING ENGINEERS
NEW YORK, N. Y.

NEW HAMPSHIRE
DEPARTMENT OF PUBLIC WORKS AND HIGHWAYS
AND
MAINE STATE HIGHWAY COMMISSION
INTERSTATE 95 BRIDGE
OVER
PISCATAQUA RIVER
BETWEEN
PORTSMOUTH, NEW HAMPSHIRE AND KITTERY, MAINE

GENERAL PLAN & ELEVATION
STA. 524+25 - STA. 533+00

SHEET 4 OF 23

129-32

B. P. R. REG. NO.	STATE	PROJECT NUMBER	SHEET NO.	TOTAL SHEETS
1	MAINE	I-95-1(22)16	5	23

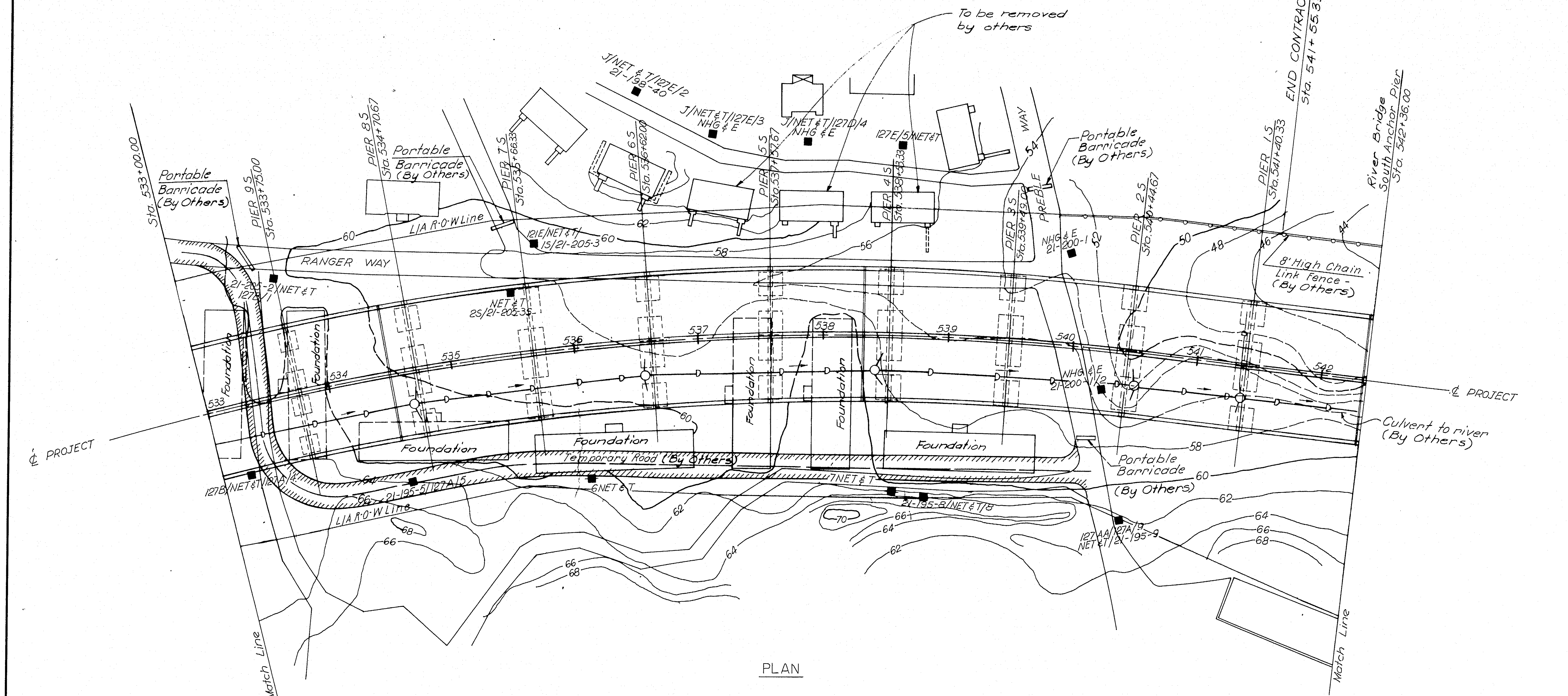
To be removed by others
J/NET & T/127E/2 21-198-40
J/NET & T/127E/3 NHG & E
J/NET & T/127D/4 NHG & E
127E/5/NET & T
END CONTRACT Sta. 541+55.33
River Bridge South Anchor Pier Sta. 542+36.00
Sta. 533+00.00
Portable Barricade (By Others)
PIER 9.5 Sta. 533+75.00
PIER 8.5 Sta. 534+70.67
PIER 7.5 Sta. 535+66.33
PIER 6.5 Sta. 536+62.00
PIER 5.5 Sta. 537+57.67
PIER 4.5 Sta. 538+53.33
PIER 3.5 Sta. 539+49.00
PIER 2.5 Sta. 540+44.67
PIER 1.5 Sta. 541+40.33
L/A R-O-W Line
121E/NET & T/ 15/21-205-3
RANGER WAY
21-205-2/NET & T 127D/1
NET & T 25/21-205-35
PREBLE WAY
NHG & E 21-200-1
NHG & E 21-200-1/2
8' High Chain Link Fence - (By Others)
Foundation
Temporary Road (By Others)
℄ PROJECT
Culvert to river (By Others)
121B/NET & T/186A/1
21-195-5/127A/15
6NET & T
7NET & T
21-195-8/NET & T/8
127AA/127A/13 NET & T/21-195-9
L/A R-O-W Line
Match Line
533
534
535
536
537
538
539
540
541
542
44
46
48
50
52
54
56
58
60
62
64
66
68
70

PLAN

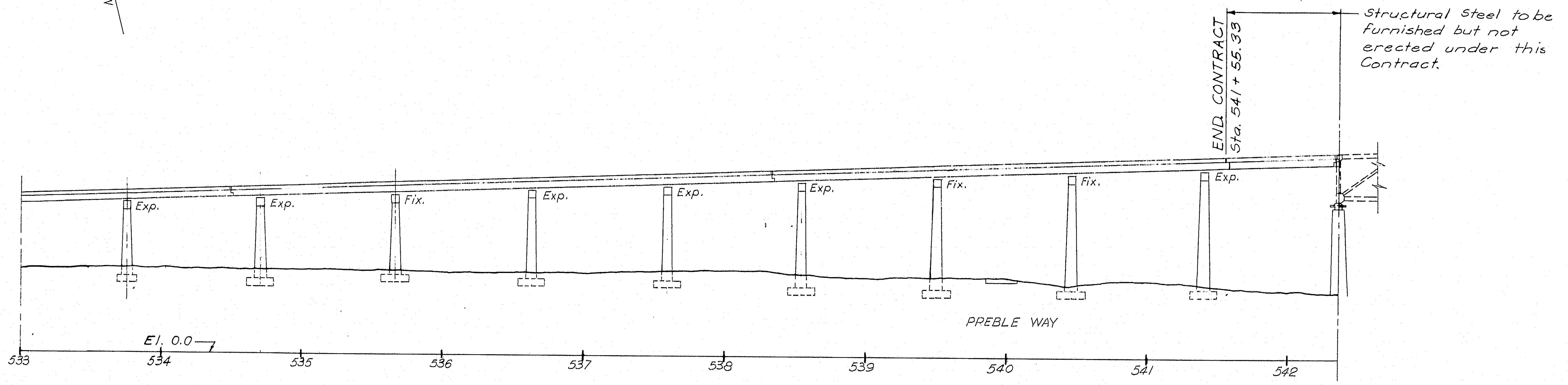
END CONTRACT Sta. 541+55.33
Structural Steel to be furnished but not erected under this Contract.
Exp.
Exp.
Fix.
Exp.
Exp.
Exp.
Fix.
Fix.
Exp.
PREBLE WAY
El. 0.0
533
534
535
536
537
538
539
540
541
542

ELEVATION

Scale Horiz. & Vert.: 1" = 50'

3

DESIGN —
TRACE — S. Bradford
CHECK — H. R. Cattley + R. W. Christie

BRIDGE NO.
IN CHARGE OF — R. W. Christie

NEW HAMPSHIRE
DEPARTMENT OF PUBLIC WORKS AND HIGHWAYS
AND
MAINE STATE HIGHWAY COMMISSION

INTERSTATE 95 BRIDGE
OVER
PISCATAQUA RIVER
BETWEEN
PORTSMOUTH, NEW HAMPSHIRE AND KITTERY, MAINE

GENERAL PLAN & ELEVATION
STA. 533+00 - STA. 542+36

SHEET 5 OF 23

HARDESTY & HANOVER
CONSULTING ENGINEERS
NEW YORK, N. Y.

129-33

B. P. R. REG. NO.	STATE	PROJECT NUMBER	SHEET NO.	TOTAL SHEETS
1	MAINE	I - 95 - 1(22)16	6	23

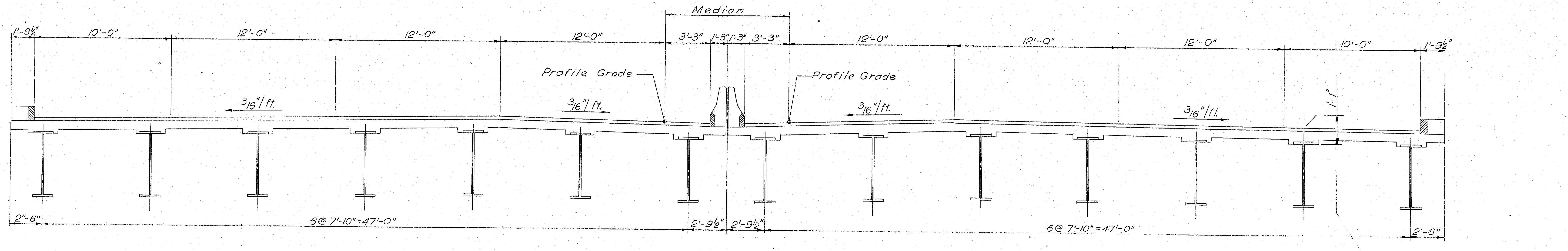
Median
1'-9½"
10'-0"
12'-0"
12'-0"
12'-0"
3'-3"
1'-3"
1'-3"
3'-3"
12'-0"
12'-0"
12'-0"
10'-0"
1'-9½"
Profile Grade
Profile Grade
3/16"/ft.
3/16"/ft.
3/16"/ft.
3/16"/ft.
1'-1"
2'-6"
6 @ 7'-10" = 47'-0"
2'-9½"
2'-9½"
6 @ 7'-10" = 47'-0"
2'-6"
Top of stringer web to top of wearing surface

APPROACH SPANS - NORMAL SECTION

Scale : ¼" = 1'-0"

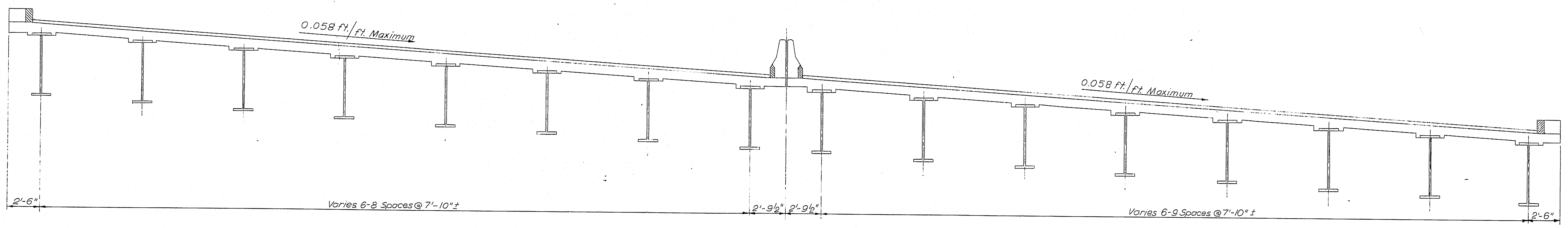
0.058 ft./ft. Maximum
0.058 ft./ft. Maximum
2'-6"
Varies 6-8 Spaces @ 7'-10" ±
2'-9½"
2'-9½"
Varies 6-9 Spaces @ 7'-10" ±
2'-6"

APPROACH SPANS - SUPERELEVATED SECTION

NOTE:

DECK, MEDIAN BARRIER, & BRUSH CURBS
ARE NOT PART OF THIS CONTRACT

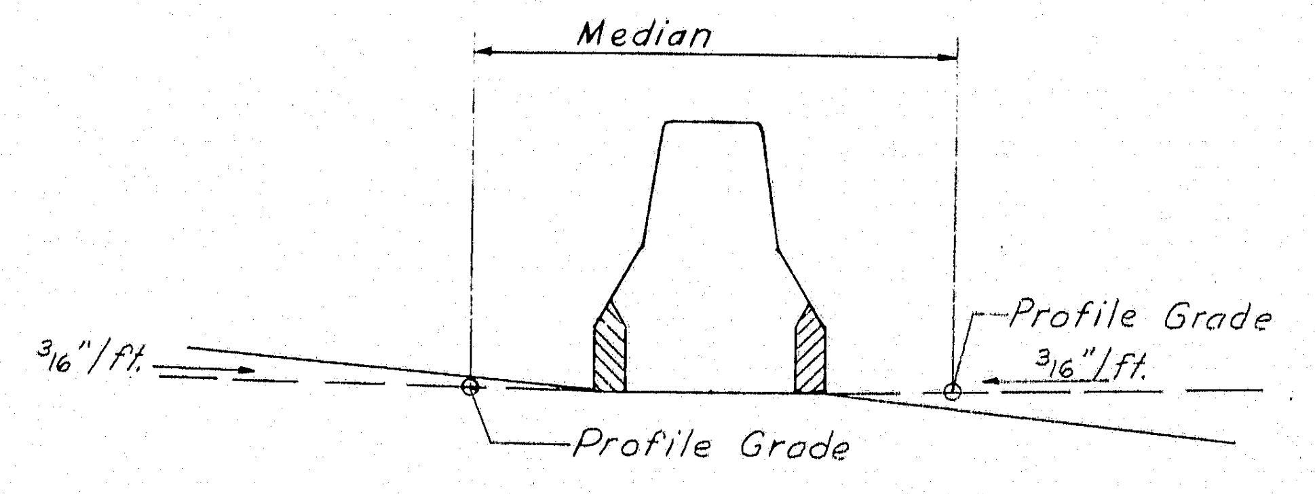
Median
3/16"/ft.
Profile Grade
3/16"/ft.
Profile Grade

GEOMETRY OF THEORETICAL PROFILE
No Scale

3

DESIGN —
TRACE — C. Janczewski
CHECK — S. Nishimura

BRIDGE NO.
IN CHARGE OF — R. W. Christie

NEW HAMPSHIRE
DEPARTMENT OF PUBLIC WORKS AND HIGHWAYS
AND
MAINE STATE HIGHWAY COMMISSION
INTERSTATE 95 BRIDGE
OVER
PISCATAQUA RIVER
BETWEEN
PORTSMOUTH, NEW HAMPSHIRE AND KITTERY, MAINE

HARDESTY & HANOVER
CONSULTING ENGINEERS
NEW YORK, N. Y.

TYPICAL SECTIONS

SHEET 6 OF 23

129-34

B. P. R. REG. NO.	STATE	PROJECT NUMBER	SHEET NO.	TOTAL SHEETS
1	MAINE	I-95-1(22)16	7	23

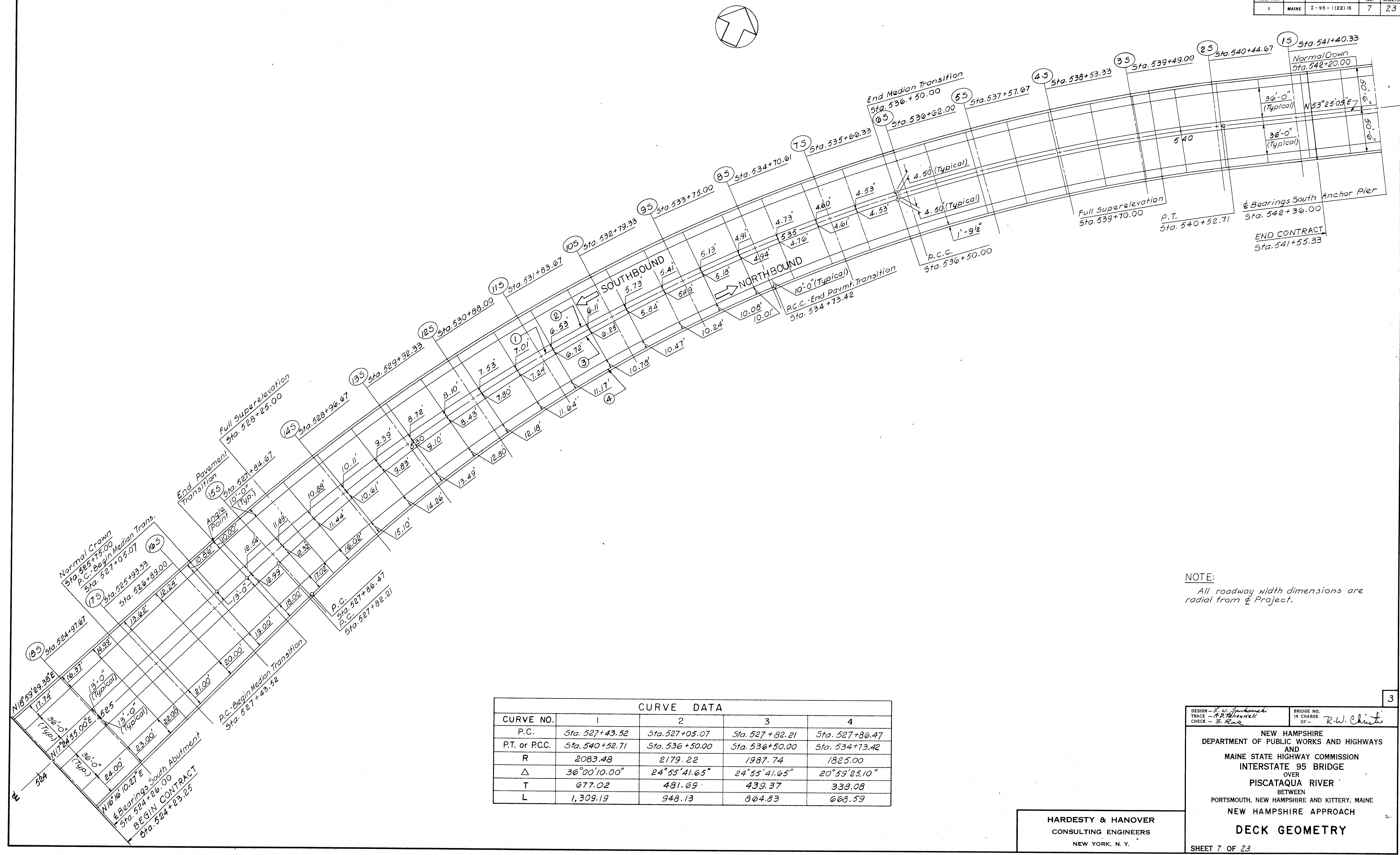

185 Sta. 524+97.67
175 Sta. 525+93.33
165 Sta. 526+89.00
155 Sta. 527+84.67
145 Sta. 528+96.67
135 Sta. 529+92.33
125 Sta. 530+88.00
115 Sta. 531+83.67
105 Sta. 532+79.33
95 Sta. 533+75.00
85 Sta. 534+70.61
75 Sta. 535+66.33
65 Sta. 536+62.00
55 Sta. 537+57.67
45 Sta. 538+53.33
35 Sta. 539+49.00
25 Sta. 540+44.67
15 Sta. 541+40.33
Normal Crown Sta. 525+75.00
P.C.-Begin Median Trans. Sta. 527+05.07
End Pavement Transition
Angle Point
10'-0" (Typ.)
Full Superelevation Sta. 528+25.00
P.C. Sta. 527+86.47
P.C. Sta. 527+82.21
P.C.-Begin Median Transition Sta. 527+43.52
N18°59'29.38"E
N17°24'55.00"E
N16°16'10.27"E
℄ Bearings South Abutment Sta. 524+26.00
BEGIN CONTRACT Sta. 524+23.25
℄
524
525
530
535
540
36'-0" (Typ.)
13'-0" (Typical)
13'-0"
17.74'
16.37'
14.99'
13.62'
12.24'
10.86'
10.00'
12.54'
12.99'
11.69'
12.32'
10.88'
11.44'
10.11'
10.61'
9.39'
9.83'
8.72'
9.10'
8.10'
8.43'
7.53'
7.80'
7.01'
7.24'
6.53'
6.72'
6.11'
6.25'
5.73'
5.84'
5.41'
5.49'
5.13'
5.18'
4.91'
4.94'
4.73'
4.76'
4.60'
4.61'
4.53'
4.53'
24.00'
23.00'
22.00'
21.00'
20.00'
19.00'
18.00'
17.02'
16.02'
15.10'
14.26'
13.49'
12.80'
12.18'
11.64'
11.17'
10.78'
10.47'
10.24'
10.08'
10.01'
①
②
③
④
SOUTHBOUND
NORTHBOUND
10'-0" (Typical)
P.C.C.-End Pavmt. Transition Sta. 534+73.42
End Median Transition Sta. 536.+50.00
4.50' (Typical)
4.50' (Typical)
1'-9½"
P.C.C. Sta. 536+50.00
Full Superelevation Sta. 539+70.00
P.T. Sta. 540+52.71
Normal Crown Sta. 542+20.00
36'-0" (Typical)
36'-0" (Typical)
N53°25'05"E
50'-6"
50'-6"
℄ Bearings South Anchor Pier Sta. 542+36.00
END CONTRACT Sta. 541+55.33

NOTE:
All roadway width dimensions are radial from ℄ Project.

CURVE DATA				
CURVE NO.	1	2	3	4
P.C.	Sta. 527+43.52	Sta. 527+05.07	Sta. 527+82.21	Sta. 527+86.47
P.T. or P.C.C.	Sta. 540+52.71	Sta. 536+50.00	Sta. 536+50.00	Sta. 534+73.42
R	2083.48	2179.22	1987.74	1825.00
△	36°00'10.00"	24°55'41.65"	24°55'41.65"	20°59'25.10"
T	677.02	481.69	439.37	338.08
L	1,309.19	948.13	864.83	668.59

HARDESTY & HANOVER
CONSULTING ENGINEERS
NEW YORK, N.Y.

3

DESIGN — L. W. Jankowski
TRACE — A. D. Tchenkeli
CHECK — B. Rak

BRIDGE NO. IN CHARGE OF — R. W. Christie

NEW HAMPSHIRE
DEPARTMENT OF PUBLIC WORKS AND HIGHWAYS
AND
MAINE STATE HIGHWAY COMMISSION
INTERSTATE 95 BRIDGE
OVER
PISCATAQUA RIVER
BETWEEN
PORTSMOUTH, NEW HAMPSHIRE AND KITTERY, MAINE
NEW HAMPSHIRE APPROACH

DECK GEOMETRY

SHEET 7 OF 23

129-35

B. P. R. REG. NO.	STATE	PROJECT NUMBER	SHEET NO.	TOTAL SHEETS
1	MAINE	I-95-1 (22) 16	8	23

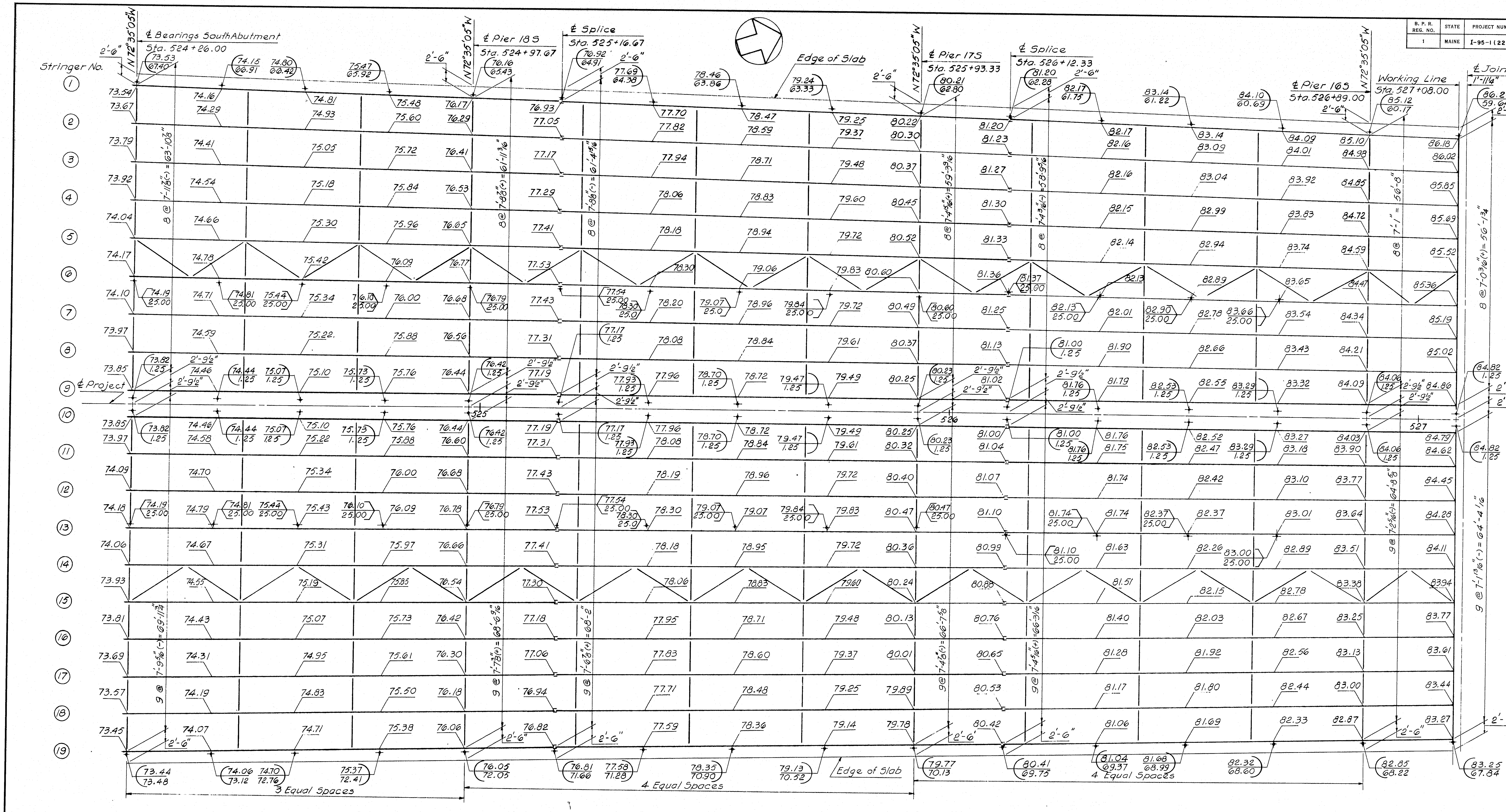
Stringer No.
1
2
3
4
5
6
7
8
9
10
11
12
13
14
15
16
17
18
19
℄ Bearings South Abutment
Sta. 524+26.00
℄ Pier 18S
Sta. 524+97.67
℄ Splice
Sta. 525+16.67
Edge of Slab
℄ Pier 17S
Sta. 525+93.33
℄ Splice
Sta. 526+12.33
℄ Pier 16S
Sta. 526+89.00
Working Line
Sta. 527+08.00
℄ Joint
1'-11¼"
N72°35'05"W
2'-6"
2'-9½"
℄ Project
525
526
527
8 @ 7'-11⅛"(-) = 63'-10⅞"
8 @ 7'-8⅜"(+) = 61'-11¹⁄₁₆"
8 @ 7'-4½"(+) = 59'-9⅛"
8 @ 7'-1" = 56'-8"
8 @ 7'-0³⁄₁₆"(+) = 56'-1¾"
9 @ 7'-9⅞"(-) = 69'-11¼"
9 @ 7'-7⅜"(+) = 68'-6⁹⁄₁₆"
9 @ 7'-4⅞"(+) = 66'-7⅜"
9 @ 7'-1¹³⁄₁₆"(-) = 64'-4⅛"
3 Equal Spaces
4 Equal Spaces
4 Equal Spaces
Edge of Slab

NOTE:

Elevations given are for top of wearing surface. Vertical distance from top of wearing surface to to top of stringer web is 1'-1".

Elevations are given for 5th points of stringer spans except in span adjacent to abutment, where elevations are given for 4th points.

℄ Bearings, ℄ Piers, Working Lines and ℄ Splices are either radial or normal to centerline of project.

STRINGER NUMBER	WEB PLATE	FLANGES					
		Sta. 524+26.00 to Sta. 524+78.67	Sta. 524+78.67 to Sta. 525+16.67	Sta. 525+16.67 to Sta. 525+74.33	Sta. 525+74.33 to Sta. 526+12.33	Sta. 526+12.33 to Sta. 526+70.00	Sta. 526+70.00 to Sta. 527+08.00
1-19	54x7/16 54x1/2	16x¾	16x1¼	16x¾	16x1⅜	16x¾	16x1¼
		Stringer Type "A"		Stringer Type "B-1"		Stringer Type "C-1"	

Fixed Joint — Splice — Splice — Exp. Joint

LEGEND:

81.04 ← Gutter Elevation
69.34 ← Gutter Offset

81.74 ← High Point Elevation
25.00 ← High Point Offset

HARDESTY & HANOVER
CONSULTING ENGINEERS
NEW YORK, N. Y.

3

DESIGN – C. M. Garcia
TRACE – A. D. Tchenkeli
CHECK – B. Ras C. M. Garcia

BRIDGE NO.
IN CHARGE OF – R. W. Christie

NEW HAMPSHIRE
DEPARTMENT OF PUBLIC WORKS AND HIGHWAYS
AND
MAINE STATE HIGHWAY COMMISSION
INTERSTATE 95 BRIDGE
OVER
PISCATAQUA RIVER
BETWEEN
PORTSMOUTH, NEW HAMPSHIRE AND KITTERY, MAINE
NEW HAMPSHIRE APPROACH

FRAMING PLAN
STA. 524+26 TO STA. 527+10

SHEET 8 OF 23

129-36

B. P. R. REG. NO.	STATE	PROJECT NUMBER	SHEET NO.	TOTAL SHEETS
1	MAINE	I-95-1(22)16	9	23

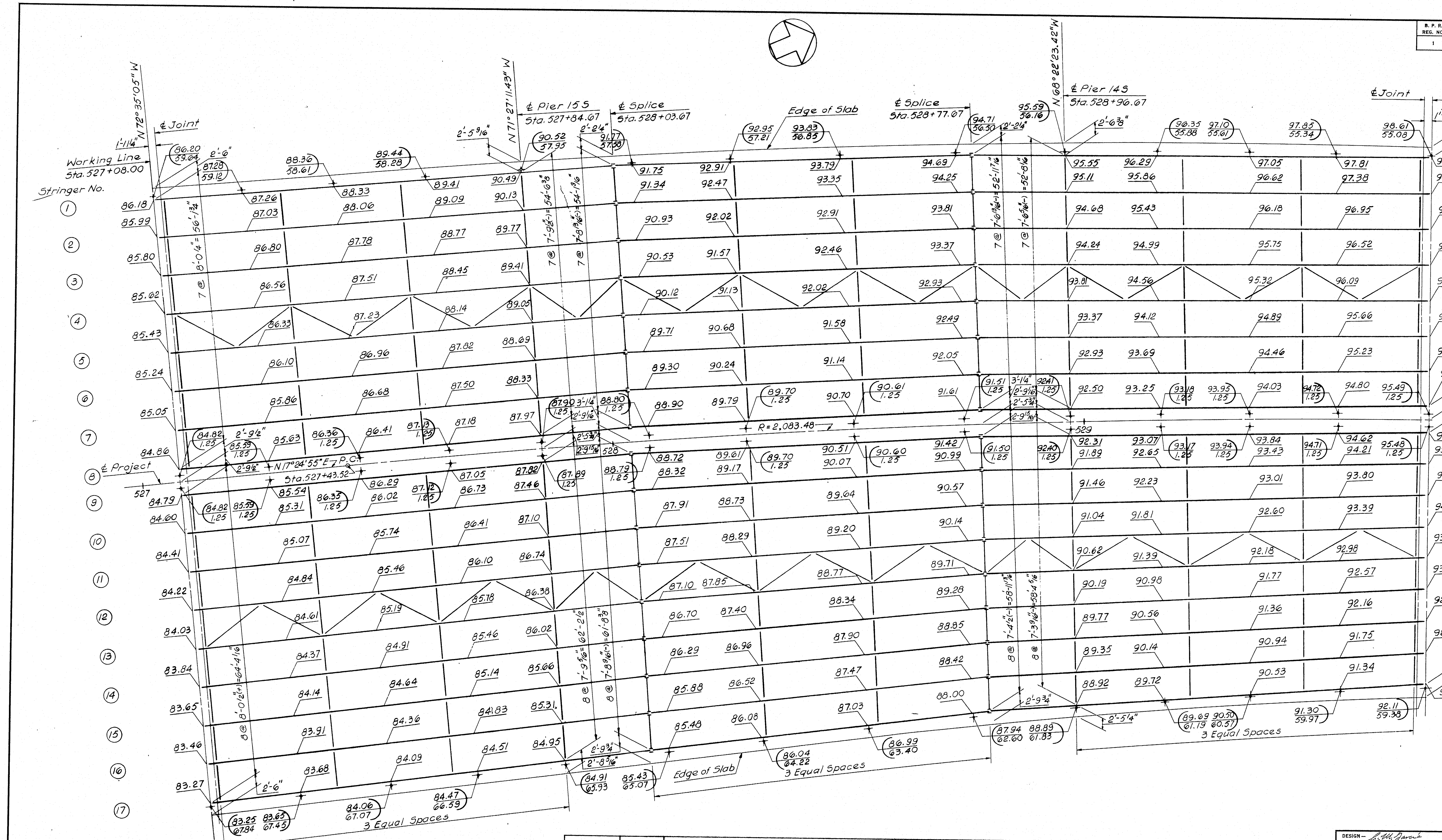

N72°35'05"W
N71°27'11.43"W
N68°22'23.42"W
℄ Joint
Working Line
Sta. 527+08.00
1'-11¼"
2'-6"
Stringer No.
① ② ③ ④ ⑤ ⑥ ⑦ ⑧ ⑨ ⑩ ⑪ ⑫ ⑬ ⑭ ⑮ ⑯ ⑰
℄ Pier 15S
Sta. 527+84.67
℄ Splice
Sta. 528+03.67
Edge of Slab
℄ Splice
Sta. 528+77.67
℄ Pier 14S
Sta. 528+96.67
℄ Joint
Working Line
Sta. 529+73.33
1'-11¼"
2'-2¼"
℄ Project
N17°24'55"E
P.C.
Sta. 527+43.52
R = 2,083.48
527
528
529
7 @ 8'-0¼" = 56'-1¾"
8 @ 8'-0½"(+) = 64'-4¹¹⁄₁₆"
7 @ 7'-4⅛" = 51'-6⅝"
8 @ 6'-11¹¹⁄₁₆"(+) = 55'-10⅜"
3 Equal Spaces
Edge of Slab
3 Equal Spaces
3 Equal Spaces

STRINGER NUMBER	WEB PLATE	FLANGES				
		Sta. 527+08.00 to Sta. 527+65.67	Sta. 527+65.67 to Sta. 528+03.67	Sta. 528+03.67 to Sta. 528+77.67	Sta. 528+77.67 to Sta. 529+15.67	Sta. 529+15.67 to Sta. 529+73.33
1-4		16 × 3/4	16 × 1 3/4	16 × 1	16 × 1 3/4	16 × 3/4
5-8	54 × 7/16	"	16 × 1 5/8	"	16 × 1 5/8	"
9-13		"	"	16 × 7/8	"	"
14-17	54 × 1/2	16 × 3/4	16 × 1 1/2	"	16 × 1 1/2	16 × 3/4
		Stringer Type "D"		Str. Type "E-1"	Stringer Type "D"	

Exp. Joint
Splice
Splice
Exp. Joint

HARDESTY & HANOVER
CONSULTING ENGINEERS
NEW YORK, N. Y.

3

DESIGN — L. M. Garcia
TRACE — A. D. Tchenkeli
CHECK — B. Rea L. M. Garcia
BRIDGE NO.
IN CHARGE OF — R. W. Christie

NEW HAMPSHIRE
DEPARTMENT OF PUBLIC WORKS AND HIGHWAYS
AND
MAINE STATE HIGHWAY COMMISSION
INTERSTATE 95 BRIDGE
OVER
PISCATAQUA RIVER
BETWEEN
PORTSMOUTH, NEW HAMPSHIRE AND KITTERY, MAINE
NEW HAMPSHIRE APPROACH

FRAMING PLAN

STA. 527 + 08 TO STA. 529 + 73

SHEET 9 OF 23

129-37

B. P. R. REG. NO.	STATE	PROJECT NUMBER	SHEET NO.	TOTAL SHEETS
1	MAINE	I-95-1(22)16	10	23

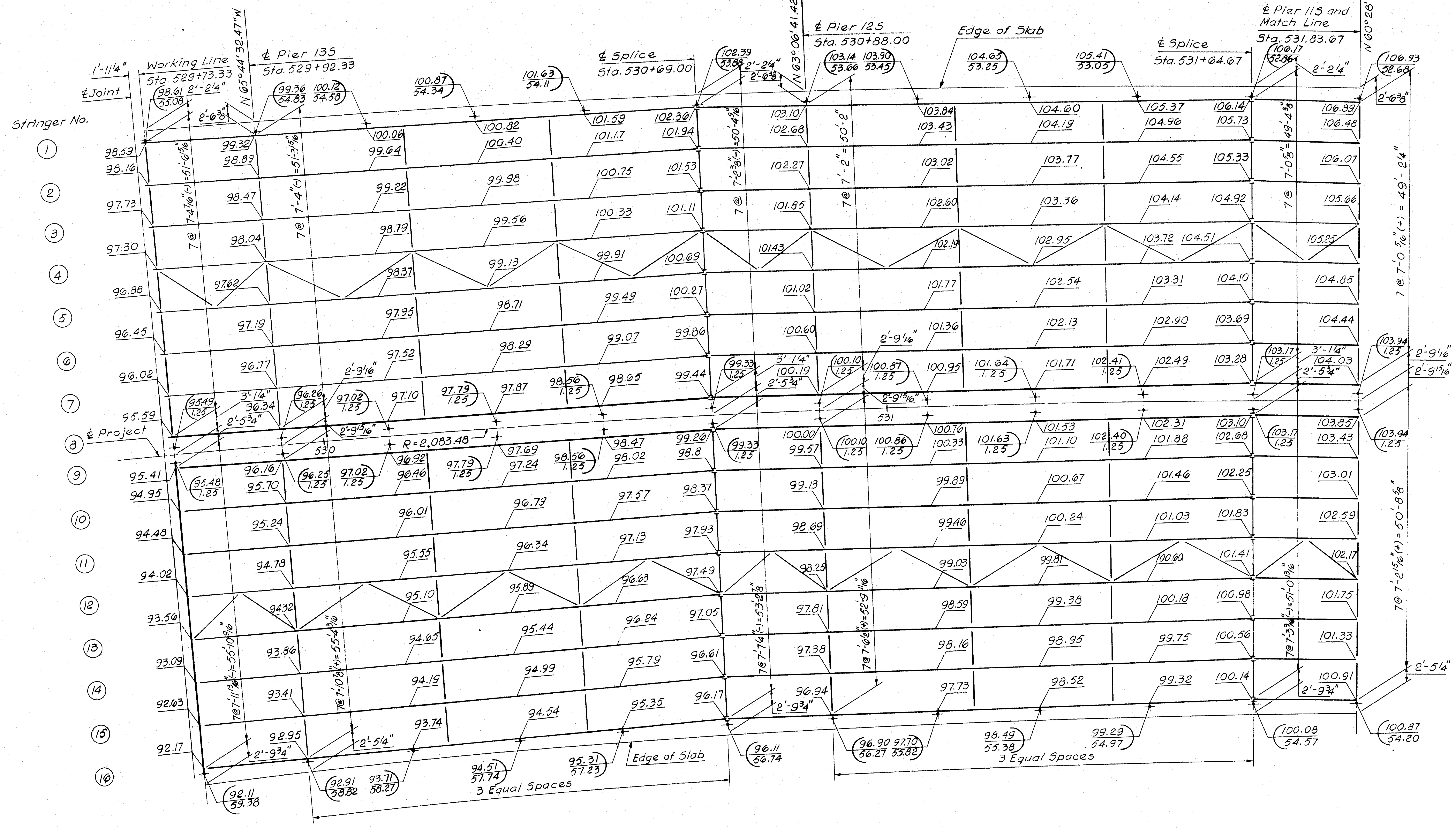

Stringer No.
1
2
3
4
5
6
7
8
9
10
11
12
13
14
15
16
1'-11¼"
₵ Joint
Working Line
Sta. 529+73.33
₵ Pier 135
Sta. 529+92.33
N 65°44'32.47"W
₵ Splice
Sta. 530+69.00
N 63°06'41.42"W
₵ Pier 125
Sta. 530+88.00
Edge of Slab
₵ Splice
Sta. 531+64.67
₵ Pier 115 and
Match Line
Sta. 531.83.67
N 60°28'50.37"W
₵ Project
R = 2,083.48
530
531
3 Equal Spaces
Edge of Slab
3 Equal Spaces
7 @ 7'-0⅝"(+) = 49'-2¼"
7 @ 7'-2⅝"(+) = 50'-8⅞"

STRINGER NUMBER	WEB PLATE	FLANGES Sta. 529+73.33 to Sta. 530+11.33	Sta. 530+11.33 to Sta. 530+69.00	Sta. 530+69.00 to Sta. 531+07.00	Sta. 531+07.00 to Sta. 531+64.67	Sta. 531+64.67 to Sta. 531+83.67
1-4 5-8 9-12 13-16	54 × 7/16 54 × ½	16 × 1½ 16 × 1⅜ " 16 × 1¼	16 × ¾ "F-2" " 16 × ¾ "C-2" "	16 × 1½ 16 × 1⅜ " 16 × 1¼	16 × ¾ " " "	16 × 1⅝ 16 × 1½ " 16 × 1⅜
		Stringers Type "C-2" & "F-2"		Stringer Type "B-2"		Str. Type "B-2"

Exp. Joint

Splice

Splice

Match Line

HARDESTY & HANOVER
CONSULTING ENGINEERS
NEW YORK, N. Y.

3

DESIGN — C. M. Garcia
TRACE — A. D. Tchenkeli
CHECK — B. [illegible] C. M. Garcia

BRIDGE NO.
IN CHARGE OF — R. W. Christie

NEW HAMPSHIRE
DEPARTMENT OF PUBLIC WORKS AND HIGHWAYS
AND
MAINE STATE HIGHWAY COMMISSION
INTERSTATE 95 BRIDGE
OVER
PISCATAQUA RIVER
BETWEEN
PORTSMOUTH, NEW HAMPSHIRE AND KITTERY, MAINE
NEW HAMPSHIRE APPROACH

FRAMING PLAN
STA. 529 + 73 TO STA. 531 + 84

SHEET 10 OF 23

129-38

B. P. R. REG. NO.	STATE	PROJECT NUMBER	SHEET NO.	TOTAL SHEETS
1	MAINE	I-95-1(22)16	11	23

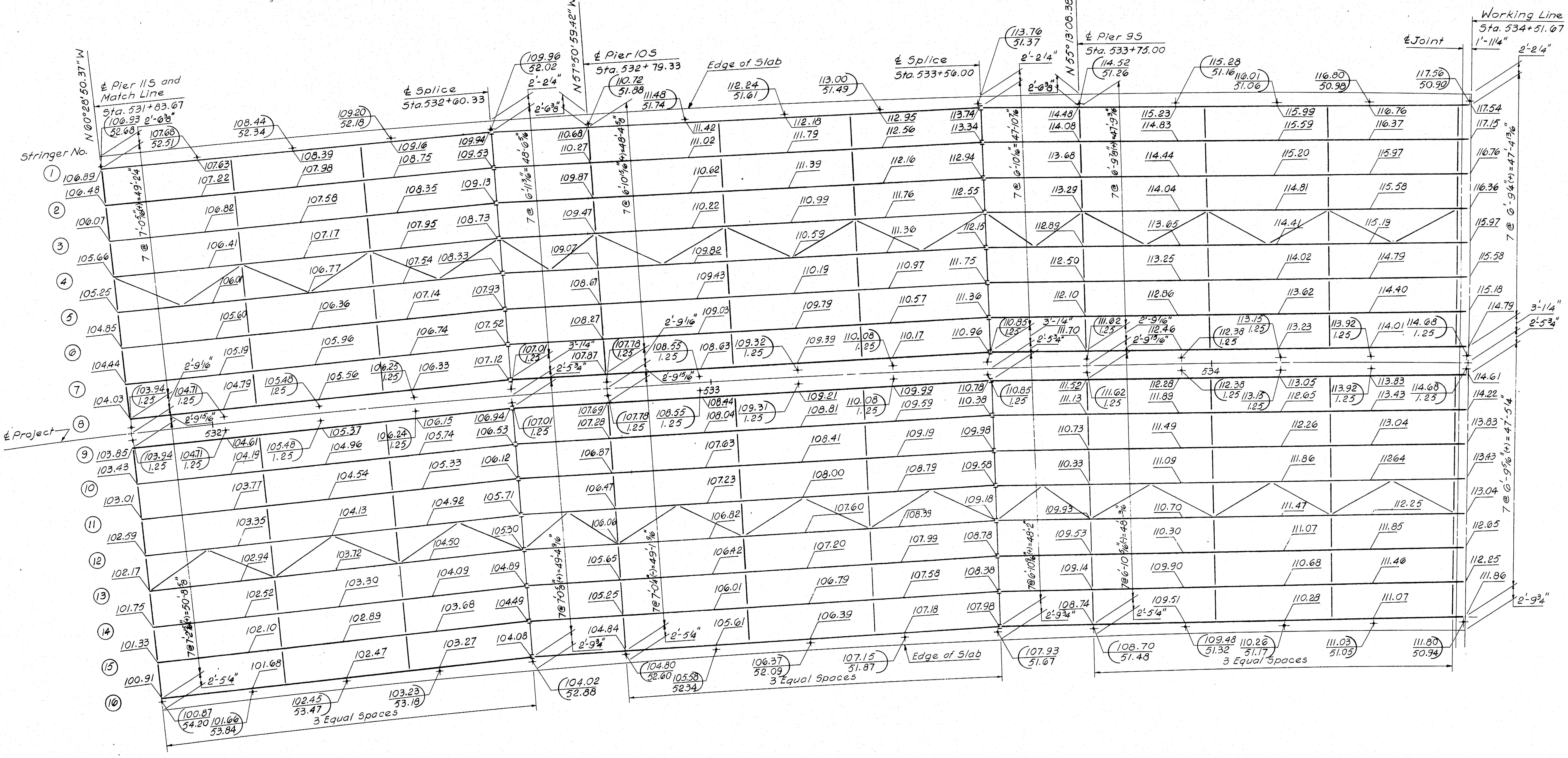

℄ Pier 115 and Match Line
Sta. 531+83.67
N 60°28'50.37" W
℄ Splice
Sta. 532+60.33
℄ Pier 105
Sta. 532+79.33
N 57°50'59.42" W
Edge of Slab
℄ Splice
Sta. 533+56.00
N 55°13'08.38" W
℄ Pier 95
Sta. 533+75.00
℄ Joint
Working Line
Sta. 534+51.67
1'-1¼"
2'-2¼"
2'-6⅜"
2'-9 1/16"
2'-9 15/16"
2'-5¾"
2'-5¼"
2'-9¾"
3'-1¼"
Stringer No.
1
2
3
4
5
6
7
8
9
10
11
12
13
14
15
16
℄ Project
532
533
534
3 Equal Spaces
7 @ 7'-0⅝"(+) = 49'-2⅜"
7 @ 6'-11 5/16" = 48'-6⅝"
7 @ 6'-10 5/16"(+) = 48'-4⅜"
7 @ 6'-10 5/16" = 47'-10⅛"
7 @ 6'-9⅝"(+) = 47'-9⅝"
7 @ 6'-9¼"(+) = 47'-4⅜"
7 @ 6'-9 3/16"(+) = 47'-5¼"
7 @ 7'-2⅜"(+) = 50'-8⅞"
7 @ 7'-0⅝"(+) = 49'-4 9/16"
7 @ 7'-0¼"(+) = 49'-1 9/16"
7 @ 6'-10⅝"(+) = 48'-2
7 @ 6'-10 5/16"(+) = 48'

STRINGER NUMBER	WEB PLATE	FLANGES Sta. 531+83.67 to Sta. 532+02.67	Sta. 532+02.67 to Sta. 532+60.33	Sta. 532+60.33 to Sta. 532+98.33	Sta. 532+98.33 to Sta. 533+56.00	Sta. 533+56.00 to Sta. 533+94.00	Sta. 533+94.00 to Sta. 534+51.67
1-4	54×7/16	16 × 1⅝	16 × ¾	16 × 1¼	16 × ¾	16 × 1¼	16 × ¾
5-12	54×½	16 × 1½	"	16 × 1⅛	"	16 × 1⅛	"
13-16		16 × 1⅜	"	16 × 1	"	16 × 1	"
		Stringer Type "B-2"		Stringer Type "B-2"		Stringer Type "D"	

Match Line

Splice

Splice

Exp. Joint

HARDESTY & HANOVER
CONSULTING ENGINEERS
NEW YORK, N. Y.

3

DESIGN — C. M. Garcia
TRACE — A. D. Tchenkeli
CHECK — B. Ray C. M. Garcia

BRIDGE NO.
IN CHARGE OF — R. W. Christie

NEW HAMPSHIRE
DEPARTMENT OF PUBLIC WORKS AND HIGHWAYS
AND
MAINE STATE HIGHWAY COMMISSION
INTERSTATE 95 BRIDGE
OVER
PISCATAQUA RIVER
BETWEEN
PORTSMOUTH, NEW HAMPSHIRE AND KITTERY, MAINE
NEW HAMPSHIRE APPROACH

FRAMING PLAN
STA. 531 + 84 TO STA. 534 + 52

SHEET 11 OF 23

129-39

B. P. R. REG. NO.	STATE	PROJECT NUMBER	SHEET NO.	TOTAL SHEETS
1	MAINE	I - 95 - 1(22) 16	12	23

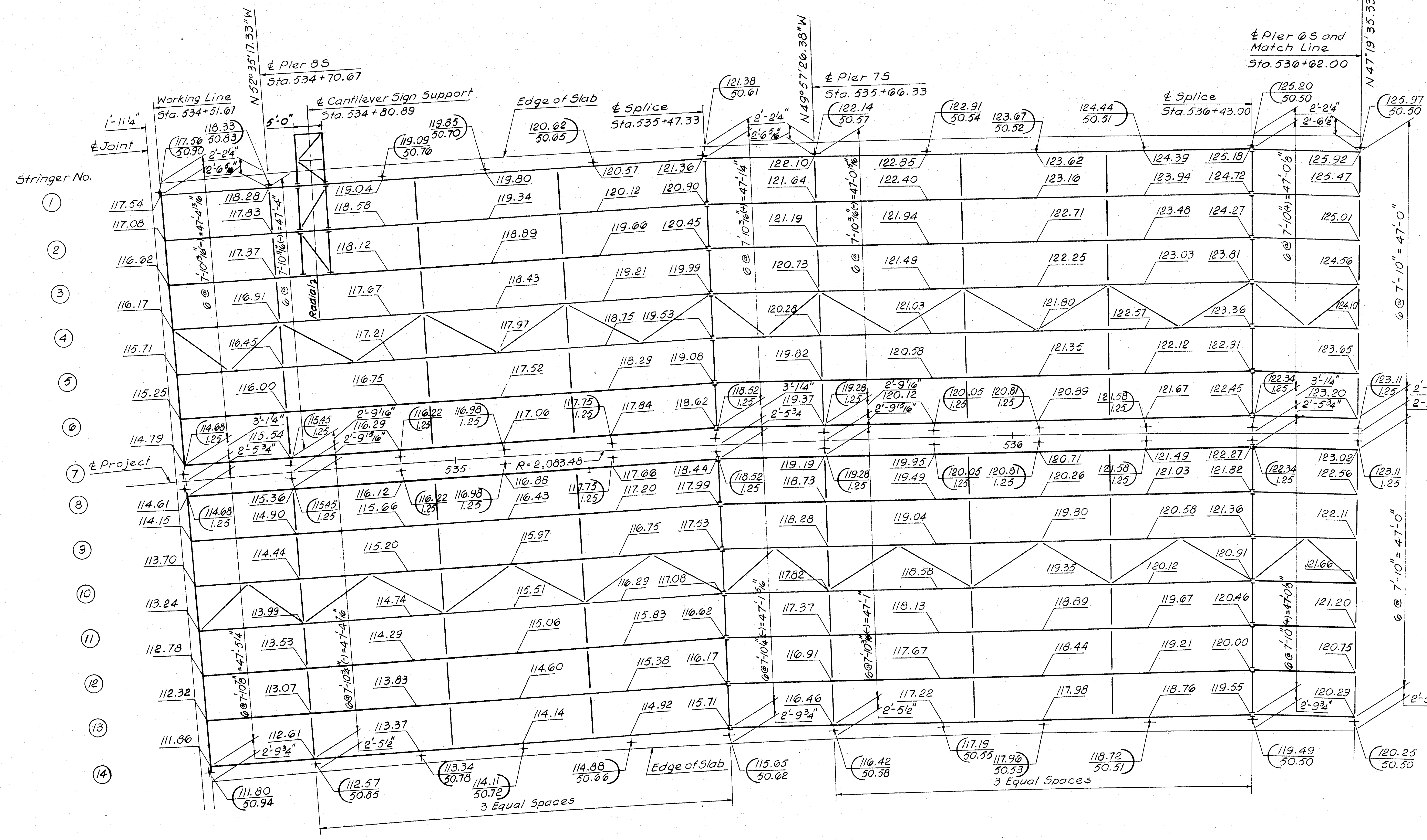

Stringer No.
1
2
3
4
5
6
7
8
9
10
11
12
13
14
1'-11¼"
℄ Joint
Working Line
Sta. 534+51.67
N 52°35'17.33"W
℄ Pier 8S
Sta. 534+70.67
5'-0"
℄ Cantilever Sign Support
Sta. 534+80.89
Edge of Slab
℄ Splice
Sta. 535+47.33
N 49°57'26.38"W
℄ Pier 7S
Sta. 535+66.33
℄ Splice
Sta. 536+43.00
℄ Pier 6S and Match Line
Sta. 536+62.00
N 47°19'35.33"W
℄ Project
R = 2,083.48
535
536
Radial
6 @ 7'-10" = 47'-0"
Edge of Slab
3 Equal Spaces
3 Equal Spaces
117.54
117.08
116.62
116.17
115.71
115.25
114.79
114.61
114.15
113.70
113.24
112.78
112.32
111.86
111.80
50.94
125.97
50.50
120.25
50.50

STRINGER NUMBER	WEB PLATE	FLANGES				
		Sta. 534+51.67 to Sta. 534+89.67	Sta. 534+89.67 to Sta. 535+47.33	Sta. 535+47.33 to Sta. 535+85.33	Sta. 535+85.33 to Sta. 536+43.00	Sta. 536+43.00 to Sta. 536+62.00
1-4	54×7/16	16 × 1⅛	16 × ¾	16 × 1⅜	16 × ¾	16 × 1¼
5-10	54×½	16 × 1	"	16 × 1¼	"	16 × 1⅛
11-14		16 × 1	"	16 × 1⅛	"	16 × 1
		Stringer Type "C-2"		Stringer Type "B-2"		Str. Type "B-2"

Exp. Joint
Splice
Splice
Match Line

HARDESTY & HANOVER
CONSULTING ENGINEERS
NEW YORK, N. Y.

3

DESIGN — G. M. Garcia
TRACE — A. D. Tchenkeli
CHECK — B. Rey G. M. Garcia

BRIDGE NO.
IN CHARGE OF — R. W. Christie

NEW HAMPSHIRE
DEPARTMENT OF PUBLIC WORKS AND HIGHWAYS
AND
MAINE STATE HIGHWAY COMMISSION

INTERSTATE 95 BRIDGE
OVER
PISCATAQUA RIVER
BETWEEN
PORTSMOUTH, NEW HAMPSHIRE AND KITTERY, MAINE

NEW HAMPSHIRE APPROACH
FRAMING PLAN
STA. 534+52 TO STA. 536+62

SHEET 12 OF 23

129-40

B. P. R. REG. NO.	STATE	PROJECT NUMBER	SHEET NO.	TOTAL SHEETS
1	MAINE	I-95-1(22)16	13	23

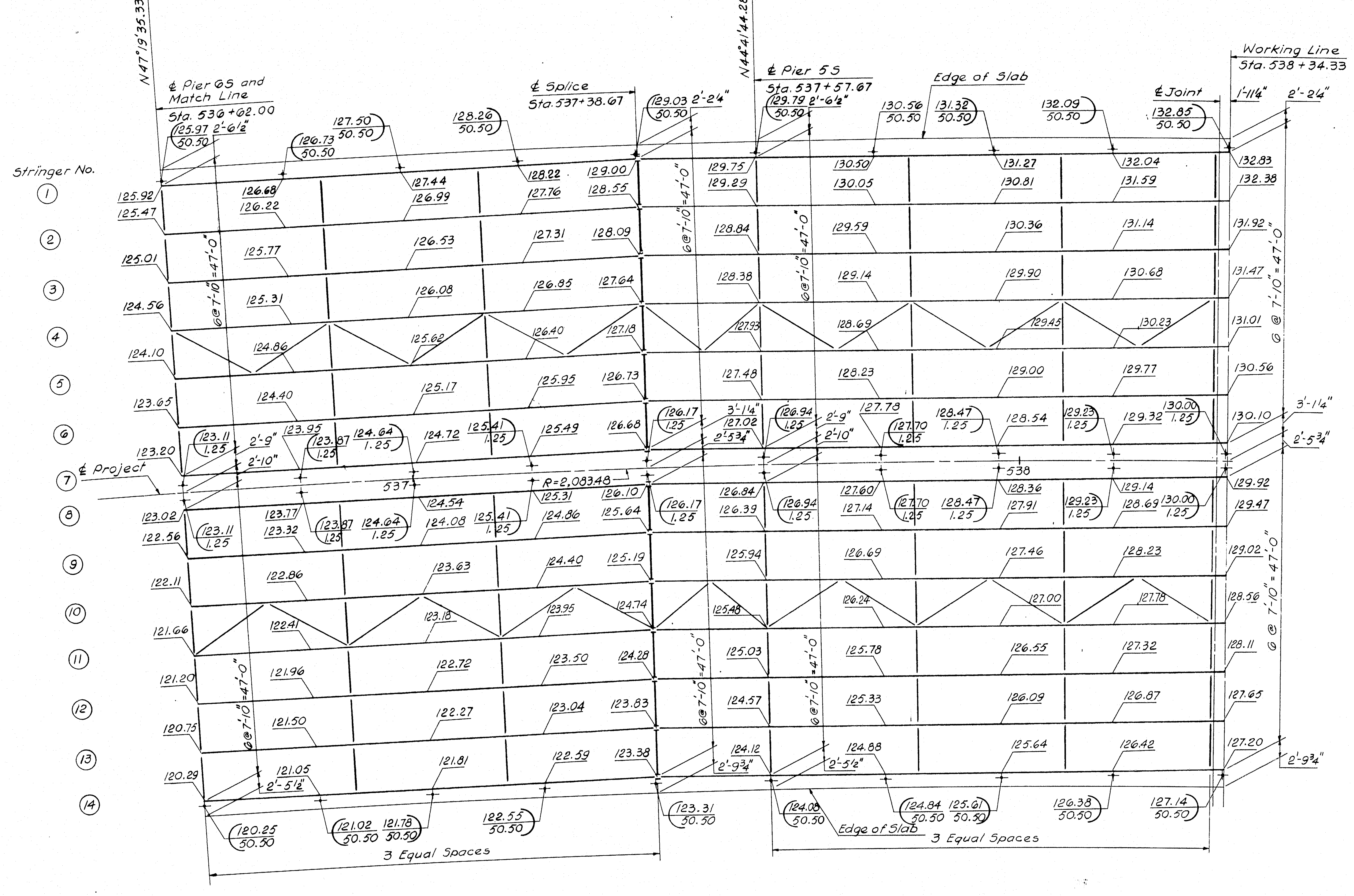
N47°19'35.33"W
℄ Pier 65 and Match Line
Sta. 536+62.00
℄ Splice
Sta. 537+38.67
N44°41'44.28"W
℄ Pier 55
Sta. 537+57.67
Edge of Slab
℄ Joint
Working Line
Sta. 538+34.33
1'-11¼"
2'-2¼"
2'-6½"
2'-2¼"
Stringer No.
①
②
③
④
⑤
⑥
⑦
⑧
⑨
⑩
⑪
⑫
⑬
⑭
℄ Project
537
538
R=2,083.48
6@7'-10"=47'-0"
2'-9"
2'-10"
2'-5¾"
3'-1¼"
2'-9¾"
2'-5½"
Edge of Slab
3 Equal Spaces
3 Equal Spaces
125.92
125.47
125.01
124.56
124.10
123.65
123.20
123.02
122.56
122.11
121.66
121.20
120.75
120.29
132.83
132.38
131.92
131.47
131.01
130.56
130.10
129.92
129.47
129.02
128.56
128.11
127.65
127.20
50.50
1.25

STRINGER NUMBER	WEB PLATE	FLANGES			
		Sta. 536+62.00 to Sta. 536+81.00	Sta. 536+81.00 to Sta. 537+38.67	Sta. 537+38.67 to Sta. 537+76.67	Sta. 537+76.67 to Sta. 538+34.33
1-4	54 x 7/16	16 × 1¼	16 × ¾	16 × 1¼	16 × ¾
5-10	54 x ½	16 × 1⅛	"	16 × 1⅛	"
11-14		16 × 1	"	16 × 1	"
		Stringer Type "B-2"		Stringer Type "D"	

Match Line

Splice

Exp. Joint

3

DESIGN —
TRACE — A.D. Tchenkeli
CHECK —

BRIDGE NO.
IN CHARGE OF — R.W. Christie

NEW HAMPSHIRE
DEPARTMENT OF PUBLIC WORKS AND HIGHWAYS
AND
MAINE STATE HIGHWAY COMMISSION
INTERSTATE 95 BRIDGE
OVER
PISCATAQUA RIVER
BETWEEN
PORTSMOUTH, NEW HAMPSHIRE AND KITTERY, MAINE
NEW HAMPSHIRE APPROACH

FRAMING PLAN
STA. 536 + 62 TO STA. 538 + 34

SHEET 13 OF 23

HARDESTY & HANOVER
CONSULTING ENGINEERS
NEW YORK, N. Y.

129-41

B. P. R. REG. NO.	STATE	PROJECT NUMBER	SHEET NO.	TOTAL SHEETS
1	MAINE	I-95-1(22)16	14	23

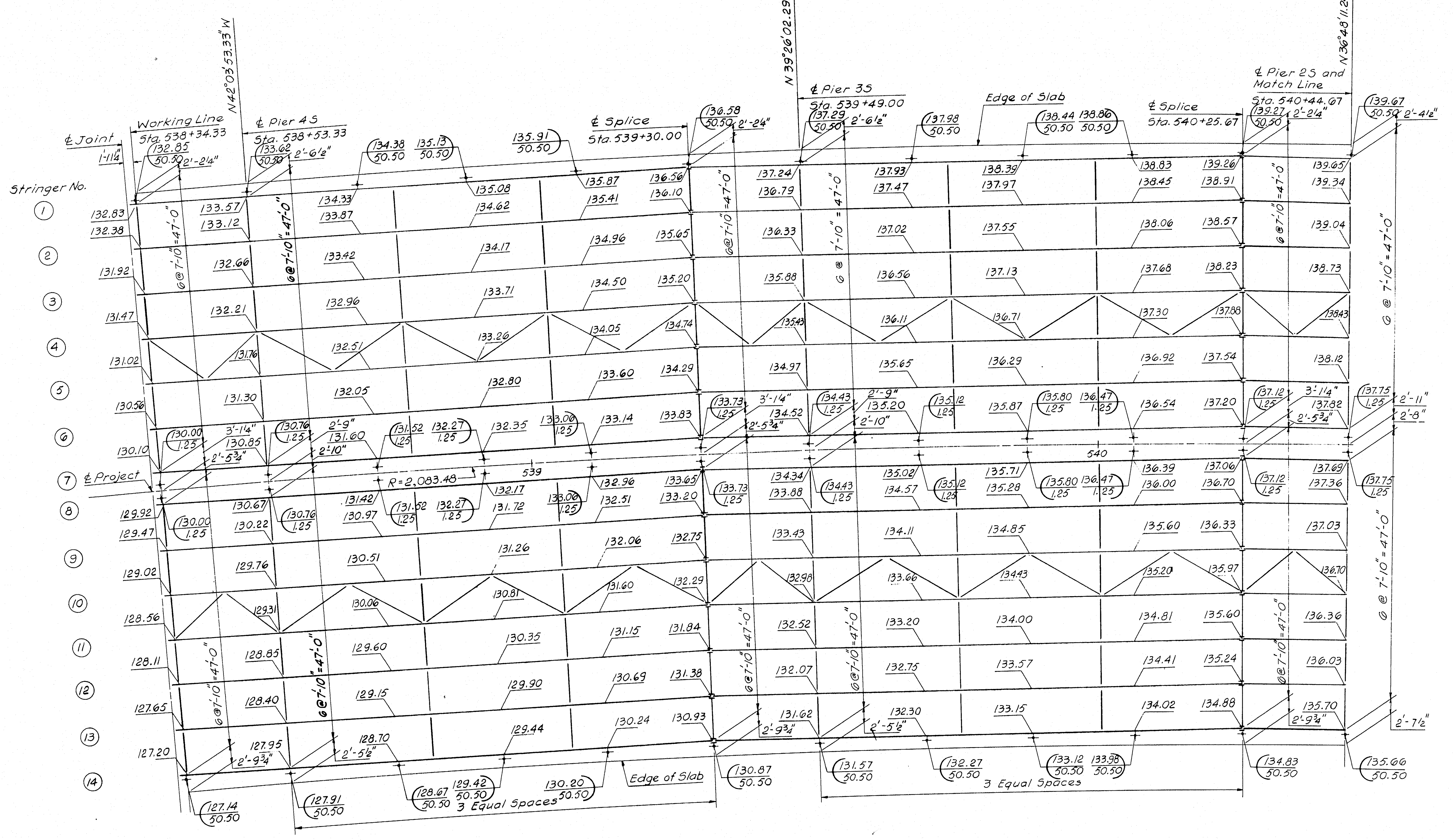
N42°03'53.33"W
N39°26'02.29"W
N36°48'11.24"W
℄ Joint
1'-1¼"
Working Line
Sta. 538+34.33
℄ Pier 45
Sta. 538+53.33
℄ Splice
Sta. 539+30.00
℄ Pier 35
Sta. 539+49.00
Edge of Slab
℄ Splice
Sta. 540+25.67
℄ Pier 25 and
Match Line
Sta. 540+44.67
Stringer No.
1
2
3
4
5
6
7
8
9
10
11
12
13
14
℄ Project
R = 2,083.48
539
540
132.85 50.50
133.66 50.50
134.38 50.50
135.13 50.50
135.91 50.50
136.58 50.50
137.29 50.50
137.98 50.50
138.44 50.50
138.86 50.50
139.27 50.50
139.67 50.50
2'-2¼"
2'-6½"
2'-2¼"
2'-6½"
2'-2¼"
2'-4½"
132.83
132.38
131.92
131.47
131.02
130.56
130.10
129.92
129.47
129.02
128.56
128.11
127.65
127.20
133.57
133.12
132.66
132.21
131.76
131.30
134.33
133.87
133.42
132.96
132.51
132.05
135.08
134.62
134.17
133.71
133.26
132.80
135.87
135.41
134.96
134.50
134.05
133.60
136.56
136.10
135.65
135.20
134.74
134.29
137.24
136.79
136.33
135.88
135.43
134.97
137.93
137.47
137.02
136.56
136.11
135.65
138.39
137.97
137.55
137.13
136.71
136.29
138.83
138.45
138.06
137.68
137.30
136.92
139.26
138.91
138.57
138.23
137.88
137.54
139.65
139.34
139.04
138.73
138.43
138.12
6@7'-10"=47'-0"
130.00 1.25
130.85
130.76 1.25
131.60
131.52 1.25
132.27 1.25
132.35
133.06 1.25
133.14
133.83
133.73 1.25
134.52
134.43 1.25
135.20
135.12 1.25
135.87
135.80 1.25
136.47 1.25
136.54
137.20
137.12 1.25
137.82
137.75 1.25
3'-1¼"
2'-9"
2'-10"
2'-5¾"
2'-11"
2'-8"
132.17
132.96
133.65
134.34
133.88
135.02
134.57
135.71
135.28
136.39
136.00
137.06
136.70
137.69
137.36
130.67
130.22
131.42
130.97
131.72
132.51
133.20
130.00 1.25
130.76 1.25
131.52 1.25
132.27 1.25
133.06 1.25
133.73 1.25
134.43 1.25
135.12 1.25
135.80 1.25
136.47 1.25
137.12 1.25
137.75 1.25
129.76
129.31
128.85
128.40
130.51
130.06
129.60
129.15
131.26
130.81
130.35
129.90
132.06
131.60
131.15
130.69
132.75
132.29
131.84
131.38
133.43
132.98
132.52
132.07
134.11
133.66
133.20
132.75
134.85
134.43
134.00
133.57
135.60
135.20
134.81
134.41
136.33
135.97
135.60
135.24
137.03
136.70
136.36
136.03
127.95
128.70
129.44
130.24
130.93
131.62
132.30
133.15
134.02
134.88
135.70
2'-9¾"
2'-5½"
2'-9¾"
2'-5½"
2'-9¾"
2'-7½"
127.14 50.50
127.91 50.50
128.67 50.50
129.42 50.50
130.20 50.50
130.87 50.50
131.57 50.50
132.27 50.50
133.12 50.50
133.98 50.50
134.83 50.50
135.66 50.50
3 Equal Spaces
Edge of Slab
3 Equal Spaces
6 @ 7'-10" = 47'-0"

STRINGER NUMBER	WEB PLATE	FLANGES				
		Sta. 538+34.33 to Sta. 538+72.33	Sta. 538+72.33 to Sta. 539+30.00	Sta. 539+30.00 to Sta. 539+68.00	Sta 539+68.00 to Sta. 540+25.67	Sta. 540+25.67 to Sta. 540+44.67
1-4	54 × 7/16	16 × 1⅛	16 × ¾	16 × 1⅜	16 × ¾	16 × 1¼
5-10	54 × ½	16 × 1	"	16 × 1¼	"	"
11-14		16 × 1	"	16 × 1⅛	"	"
		Stringer Type "F-2"		Stringer Type "B-2"		Str. Type "B-1"

Exp. Joint
Splice
Splice
Match Line

HARDESTY & HANOVER
CONSULTING ENGINEERS
NEW YORK, N. Y.

3

DESIGN – R. W. Garcia
TRACE – A. P. Tchenkali
CHECK – B. Rey L. W. Garcia

BRIDGE NO.
IN CHARGE OF – R. W. Christi

NEW HAMPSHIRE
DEPARTMENT OF PUBLIC WORKS AND HIGHWAYS
AND
MAINE STATE HIGHWAY COMMISSION
INTERSTATE 95 BRIDGE
OVER
PISCATAQUA RIVER
BETWEEN
PORTSMOUTH, NEW HAMPSHIRE AND KITTERY, MAINE
NEW HAMPSHIRE APPROACH

FRAMING PLAN
STA. 538 + 34 TO STA. 540 + 45

SHEET 14 OF 23

129-42

B. P. R. REG. NO.	STATE	PROJECT NUMBER	SHEET NO.	TOTAL SHEETS
1	MAINE	I-95-1(22)16	15	23

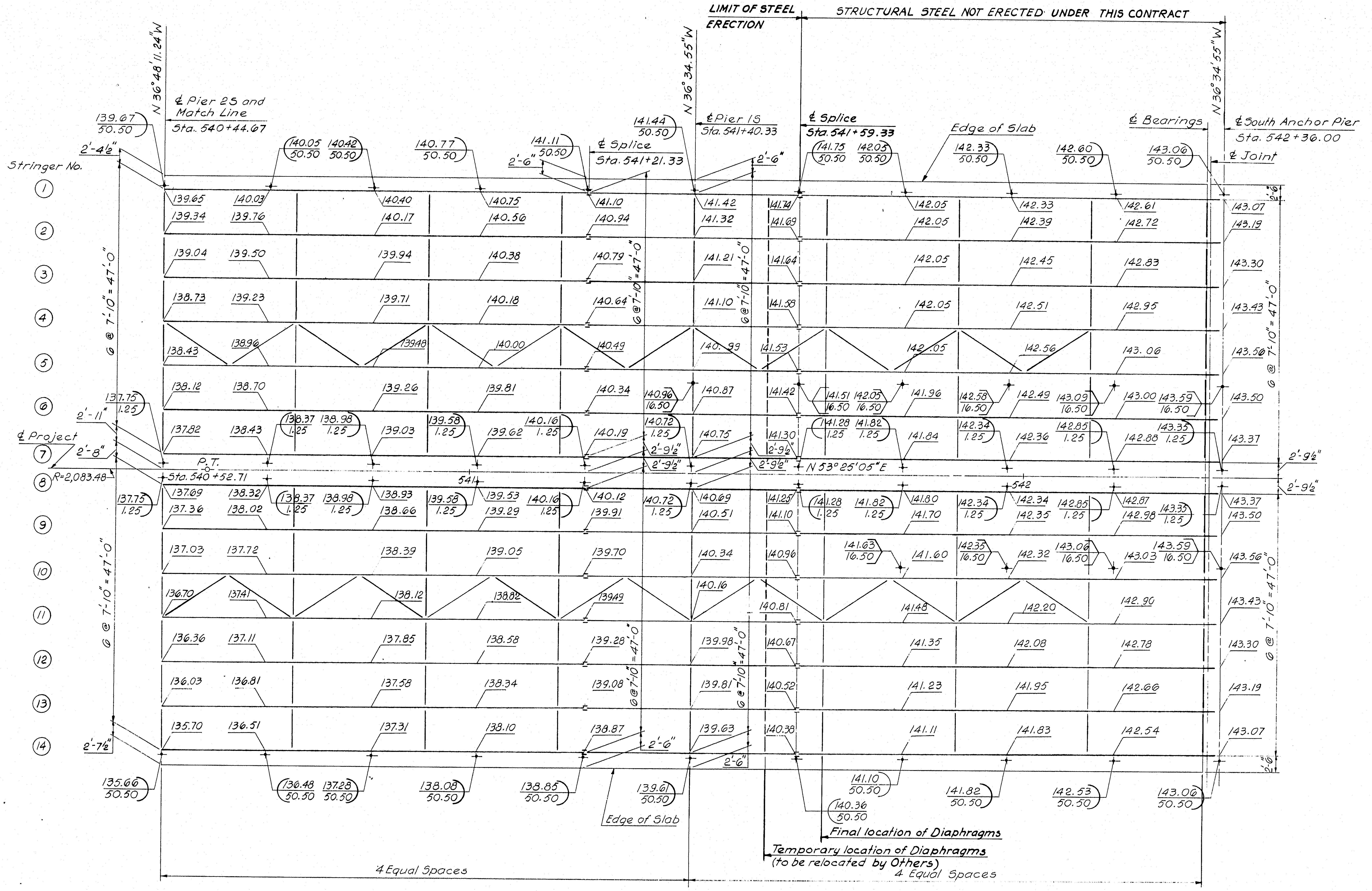
LIMIT OF STEEL ERECTION
STRUCTURAL STEEL NOT ERECTED UNDER THIS CONTRACT
N 36° 48' 11.24" W
N 36° 34' 55" W
N 36° 34' 55" W
℄ Pier 25 and Match Line
Sta. 540+44.67
℄ Splice
Sta. 541+21.33
℄ Pier 15
Sta. 541+40.33
℄ Splice
Sta. 541+59.33
Edge of Slab
℄ Bearings
℄ South Anchor Pier
Sta. 542+36.00
℄ Joint
Stringer No.
1
2
3
4
5
6
7
8
9
10
11
12
13
14
2'-4½"
2'-6"
2'-6"
2'-11"
2'-8"
2'-7½"
2'-9½"
6 @ 7'-10" = 47'-0"
℄ Project
P.T.
Sta. 540+52.71
R=2,083.48'
541
542
N 53° 25' 05" E
Edge of Slab
Final location of Diaphragms
Temporary location of Diaphragms (to be relocated by Others)
4 Equal Spaces
4 Equal Spaces

STRINGER NUMBER	WEB PLATE	FLANGES			
		Sta. 540+44.67 to Sta. 540+63.67	Sta. 540+63.67 to Sta. 541+21.33	Sta. 541+21.33 to Sta. 541+59.33	Sta. 541+59.33 to Sta. 542+36.00
1-14	54×7/16 54×1/2	16×1¼	16×¾	16×1⅝	16×1
		Stringer Type "B-1"		Stringer Type "G"	

Match Line
Splice
Splice
Exp. Joint

HARDESTY & HANOVER
CONSULTING ENGINEERS
NEW YORK, N. Y.

3

DESIGN — C.W. Jarvis
TRACE — A.D. Tchenkeli
CHECK — B. Rieg C.W. Jarvis

BRIDGE NO.
IN CHARGE OF — R.W. Christie

NEW HAMPSHIRE
DEPARTMENT OF PUBLIC WORKS AND HIGHWAYS
AND
MAINE STATE HIGHWAY COMMISSION
INTERSTATE 95 BRIDGE
OVER
PISCATAQUA RIVER
BETWEEN
PORTSMOUTH, NEW HAMPSHIRE AND KITTERY, MAINE
NEW HAMPSHIRE APPROACH
FRAMING PLAN
STA. 540+45 TO STA. 542+33
SHEET 15 OF 23

129-43

B. P. R. REG. NO.	STATE	PROJECT NUMBER	SHEET NO.	TOTAL SHEETS
1	MAINE	I-95-1(22)16	16	23

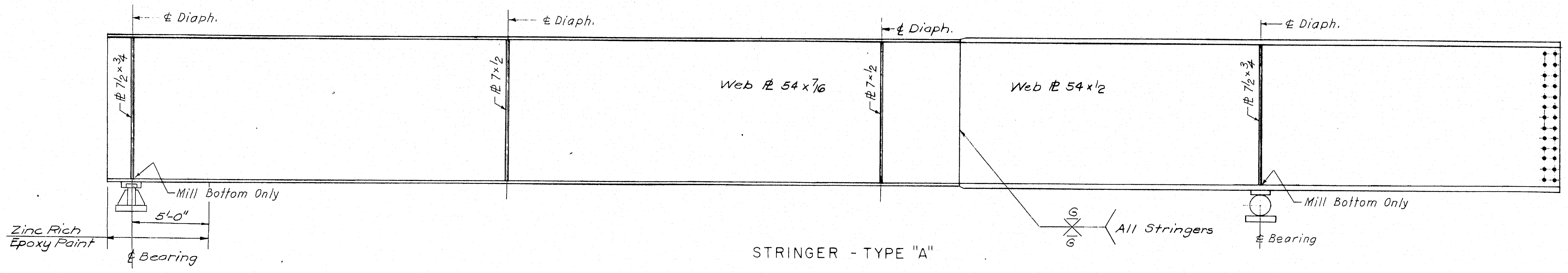
℄ Diaph.
℄ Diaph.
℄ Diaph.
℄ Diaph.
PL 7½×¾
PL 7×½
PL 7×½
PL 7½×¾
Web PL 54×7/16
Web PL 54×½
Mill Bottom Only
Mill Bottom Only
5'-0"
Zinc Rich Epoxy Paint
℄ Bearing
℄ Bearing
G
G
All Stringers

STRINGER - TYPE "A"

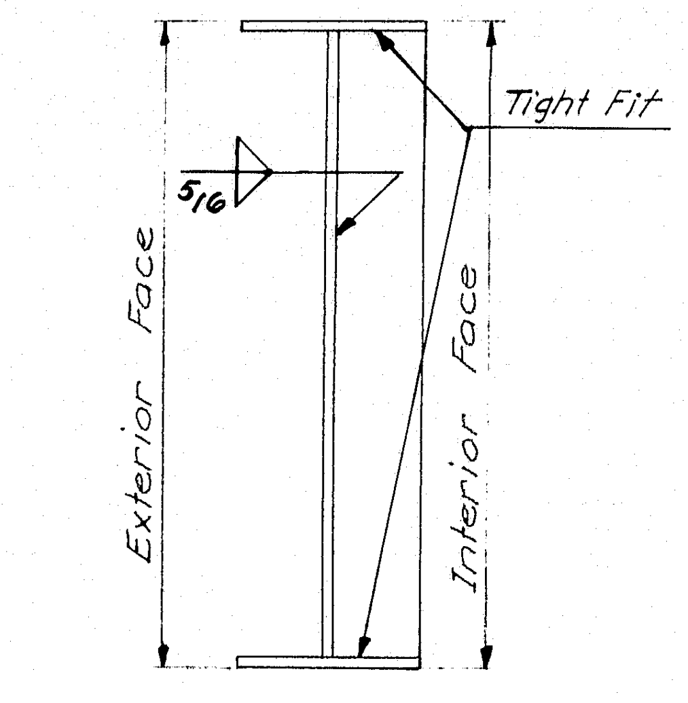
Tight Fit
5/16
Exterior Face
Interior Face

SECTION AT DIAPHRAGM
FASCIA STRINGER
Scale: ¾"=1'-0"

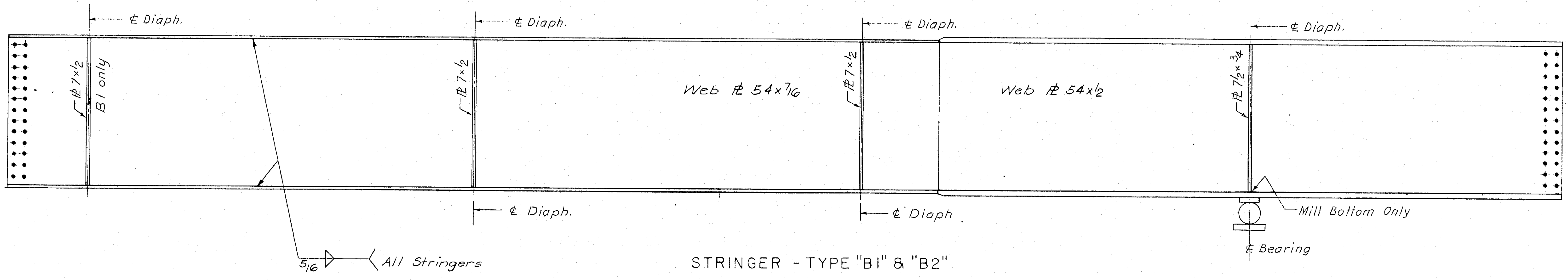
℄ Diaph.
℄ Diaph.
℄ Diaph.
℄ Diaph.
℄ Diaph.
℄ Diaph.
PL 7×½
B1 only
PL 7×½
PL 7×½
PL 7½×¾
Web PL 54×7/16
Web PL 54×½
Mill Bottom Only
℄ Bearing
5/16
All Stringers

STRINGER - TYPE "B1" & "B2"

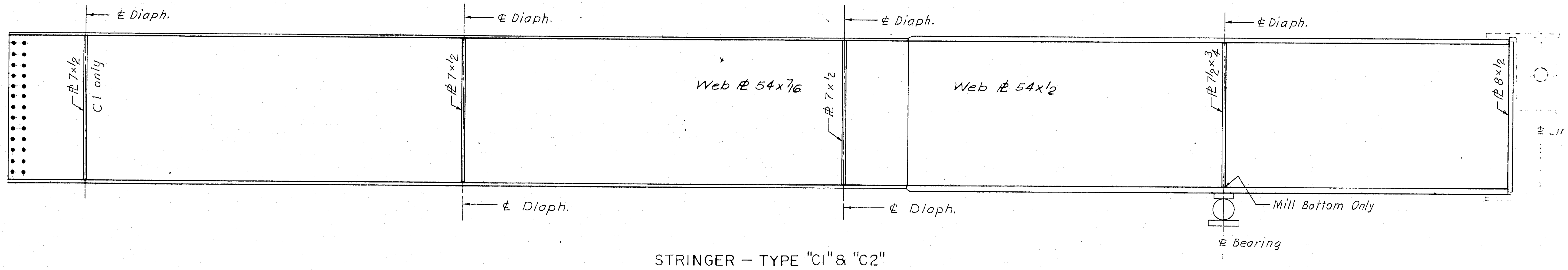
℄ Diaph.
℄ Diaph.
℄ Diaph.
℄ Diaph.
℄ Diaph.
℄ Diaph.
PL 7×½
C1 only
PL 7×½
PL 7×½
PL 7½×¾
PL 8×½
Web PL 54×7/16
Web PL 54×½
Mill Bottom Only
℄ Bearing

STRINGER – TYPE "C1" & "C2"

NOTE:
See Framing Plans for Flange Thickness.

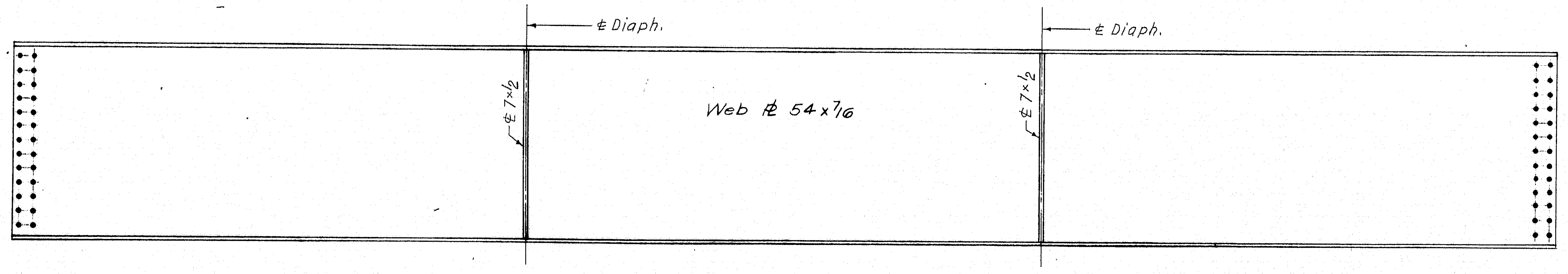
℄ Diaph.
℄ Diaph.
PL 7×½
PL 7×½
Web PL 54×7/16

STRINGER - TYPE "E1"

3

DESIGN – L. M. Garcia
TRACE – A. Klein
CHECK – S. Nishimura

BRIDGE NO.
IN CHARGE OF – R. W. Christie

NEW HAMPSHIRE
DEPARTMENT OF PUBLIC WORKS AND HIGHWAYS
AND
MAINE STATE HIGHWAY COMMISSION
INTERSTATE 95 BRIDGE
OVER
PISCATAQUA RIVER
BETWEEN
PORTSMOUTH, NEW HAMPSHIRE AND KITTERY, MAINE
APPROACH SPANS

STRINGER TYPES I

SHEET 16 OF 23

HARDESTY & HANOVER
CONSULTING ENGINEERS
NEW YORK, N. Y.

129-44

B. P. R. REG. NO.	STATE	PROJECT NUMBER	SHEET NO.	TOTAL SHEETS
1	MAINE	I-95-1(22)16	17	23

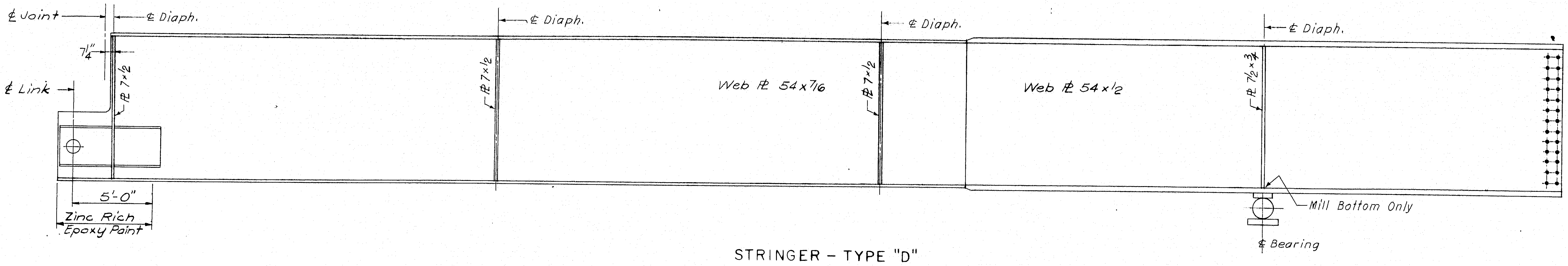

℄ Joint
℄ Diaph.
℄ Diaph.
℄ Diaph.
℄ Diaph.
7¼"
⅊ 7×½
℄ Link
⅊ 7×½
Web ⅊ 54×7/16
⅊ 7×½
Web ⅊ 54×½
⅊ 7½×¾
5'-0"
Zinc Rich
Epoxy Paint
Mill Bottom Only
℄ Bearing

STRINGER - TYPE "D"

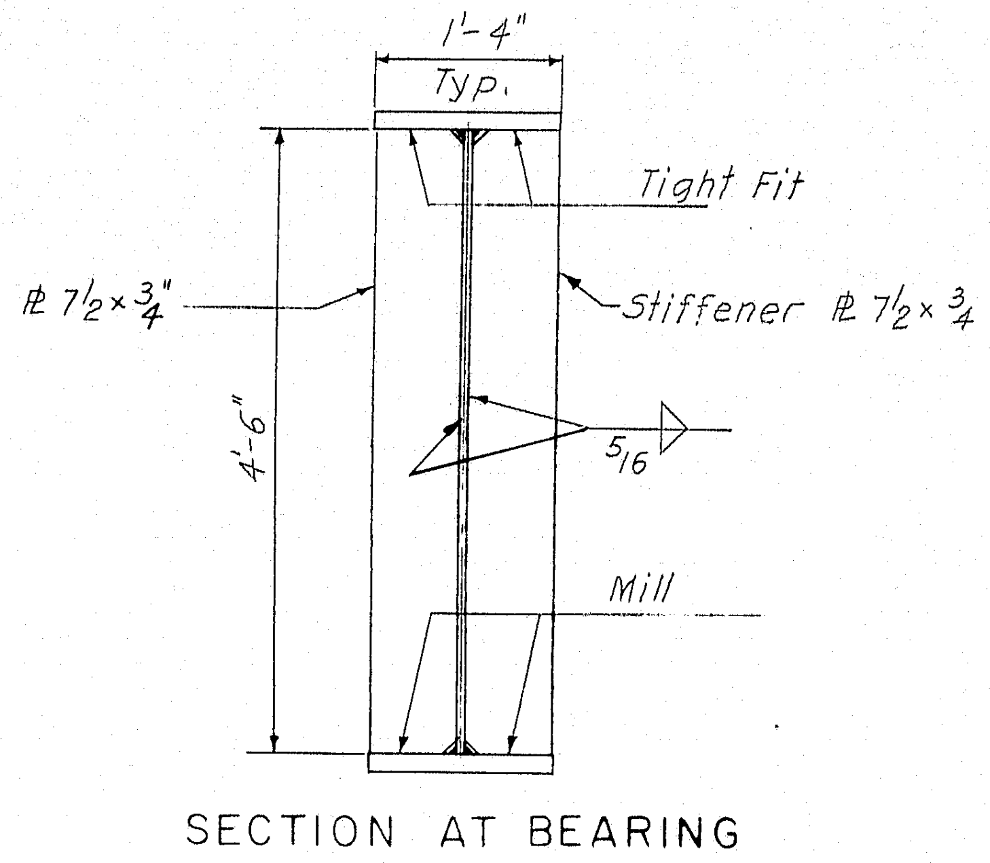

1'-4"
Typ.
Tight Fit
⅊ 7½×¾
Stiffener ⅊ 7½×¾
4'-6"
5/16
Mill

SECTION AT BEARING
INTERIOR & FASCIA STRINGERS
Scale: ¾"=1'-0"

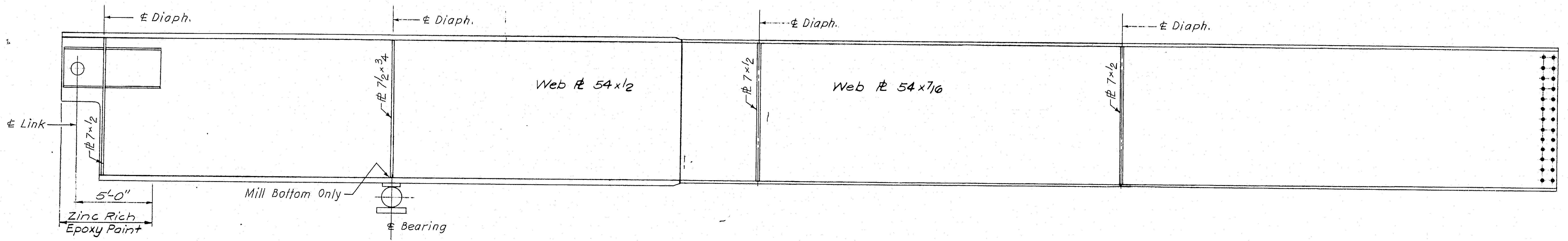

℄ Diaph.
℄ Diaph.
℄ Diaph.
℄ Diaph.
⅊ 7½×¾
Web ⅊ 54×½
⅊ 7×½
Web ⅊ 54×7/16
⅊ 7×½
℄ Link
⅊ 7×½
Mill Bottom Only
5'-0"
Zinc Rich
Epoxy Paint
℄ Bearing

STRINGER - TYPE "F2"

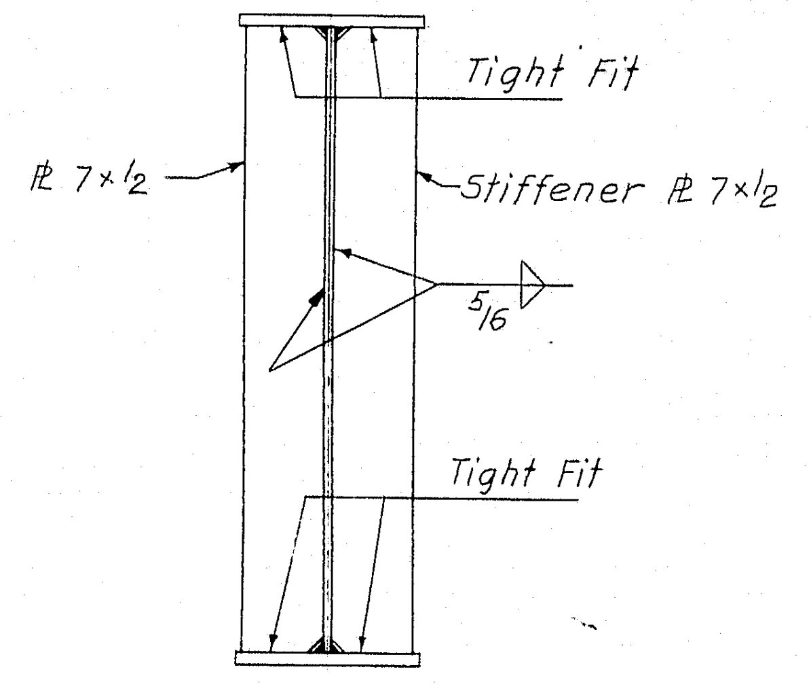

Tight Fit
⅊ 7×½
Stiffener ⅊ 7×½
5/16
Tight Fit

SECTION AT DIAPHRAGM
INTERIOR STRINGERS
Scale: ¾"=1'-0"

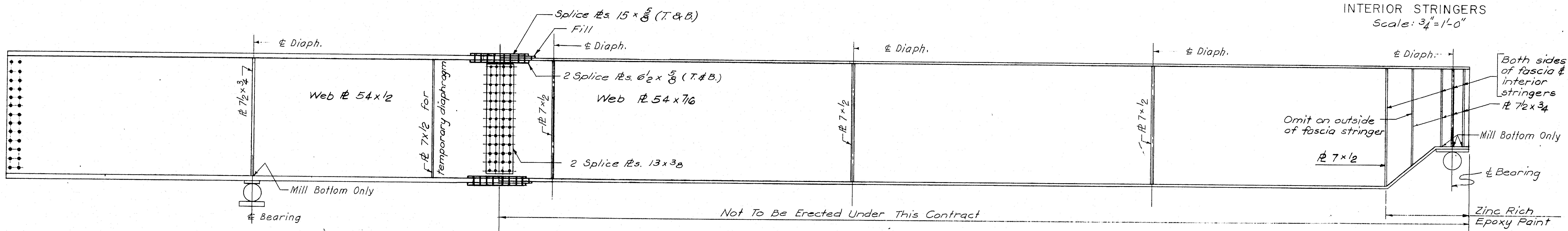

Splice ⅊s. 15×5/8 (T.&B.)
Fill
℄ Diaph.
℄ Diaph.
℄ Diaph.
℄ Diaph.
℄ Diaph.
2 Splice ⅊s. 6½×5/8 (T.&B.)
Web ⅊ 54×½
⅊ 7½×¾
⅊ 7×½ for temporary diaphragm
⅊ 7×½
Web ⅊ 54×7/16
⅊ 7×½
⅊ 7×½
2 Splice ⅊s. 13×3/8
Both sides of fascia & interior stringers
⅊ 7½×¾
Omit on outside of fascia stringer
Mill Bottom Only
⅊ 7×½
℄ Bearing
Mill Bottom Only
℄ Bearing
Not To Be Erected Under This Contract
Zinc Rich
Epoxy Paint

STRINGER - TYPE "G"

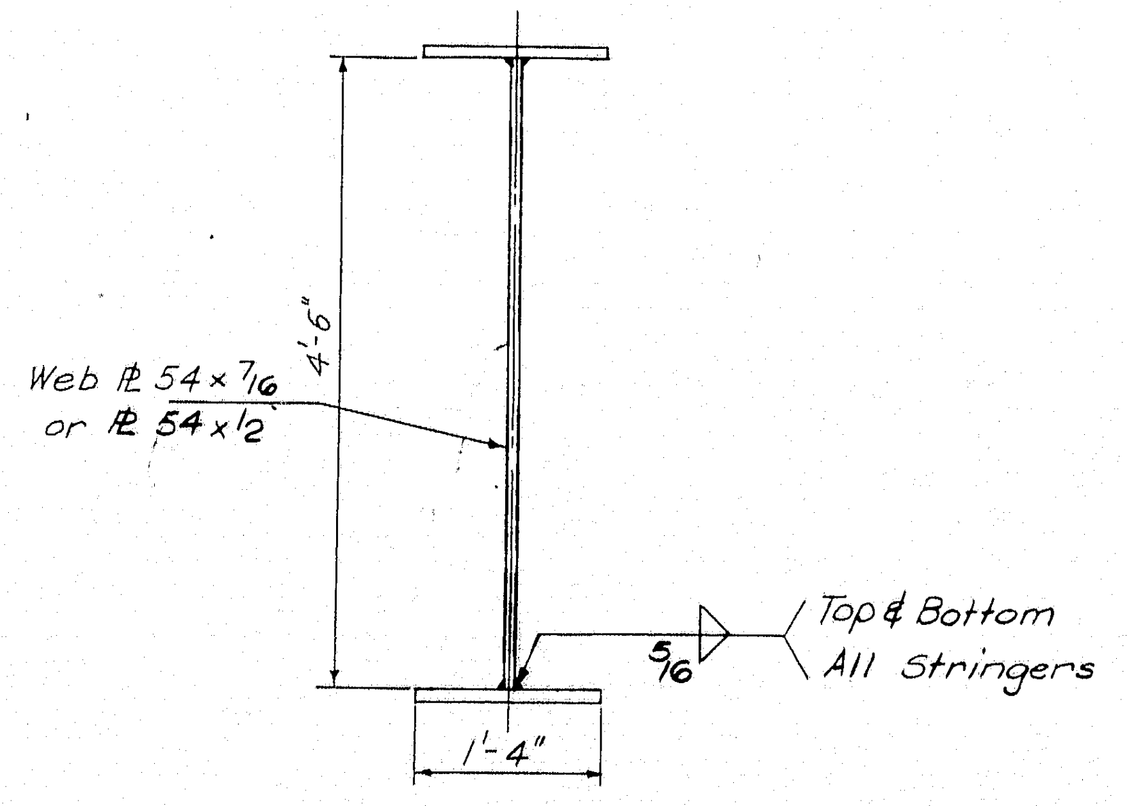

Web ⅊ 54×7/16
or ⅊ 54×½
4'-6"
5/16
Top & Bottom
All Stringers
1'-4"

TYPICAL SECTION
INTERIOR STRINGERS
Scale: ¾"=1'-0"

3

DESIGN -
TRACE - A. Klein
CHECK -

BRIDGE NO.
IN CHARGE OF - R.W. Christie

NEW HAMPSHIRE
DEPARTMENT OF PUBLIC WORKS AND HIGHWAYS
AND
MAINE STATE HIGHWAY COMMISSION
INTERSTATE 95 BRIDGE
OVER
PISCATAQUA RIVER
BETWEEN
PORTSMOUTH, NEW HAMPSHIRE AND KITTERY, MAINE
APPROACH SPANS

STRINGER TYPES II

SHEET 17 OF 23

HARDESTY & HANOVER
CONSULTING ENGINEERS
NEW YORK, N. Y.

129-45

B. P. R. REG. NO.	STATE	PROJECT NUMBER	SHEET NO.	TOTAL SHEETS
1	MAINE	I-95-1(22)16	18	23

		South Abutment		Pier 18S		Pier 17S		Pier 16S		Pier 15S		Pier 14S		Pier 13S		Pier 12S		Pier 11S		Pier 10S
MOMENT	Dead Load	0	+426	-1,038	+456	-1,088	+510	-1,179	+414	-1,455	+743	-1,455	+414	-992	+495	-1,000	+208	-1,000	+241	-1,000
	Max. Live Load	0	+560	-786	+692	-870	+668	-734	+573	-936	+658	-936	+573	-1,000	+586	-972	+559	-1,118	+533	-750
	Max. Impact	0	+142	-194	+158	-213	+151	-164	+131	-206	+138	-206	+131	-233	+134	-230	+127	-254	+121	-170
	Maximum Moment	0	+1,128	-2018	+1,306	-2,171	+1,329	-2,077	+1,118	-2,597	+1,539	-2,597	+1,118	-2,225	+1,215	-2,202	+894	-2372	+895	-1,920
	Min. Live Load	0	-213	+201	-318	+224	-340	+316	-228	+224	-229	+224	-228	+187	-361	+244	-331	+162	-282	+206
	Min. Impact	0	-54	+48	-73	+51	-77	+72	-52	+49	-48	+49	-52	+42	-82	+55	-75	+37	-64	+46
	Minimum Moment	0	+159	-789	+65	-813	+93	-791	+134	-1,182	+466	-1,182	+134	-763	+52	-701	-198	-801	-105	-748
SHEAR	Dead Load	+50		-58		-61		-64		+72		-72		+65		+57		+56		+56
	Max. Live Load	+41		-40		-41		-42		+45		-43		+41		+40		+39		+39
	Max. Impact	+10		-10		-10		-10		+10		-10		+10		+9		+9		+9
	Maximum Shear	+101		-108		-112		-116		+127		-125		+116		+106		+104		+104
	Min. Live Load	-6		+2		+5		+3		-2		+2		-5		-2		-6		-6
	Min. Impact	—		—		+1		+1		-1		—		-1		-1		-1		-1
	Minimum Shear	+44		+56		-55		-60		+69		-70		+59		+54		+49		+49
	Design Moment	0	+1,128	-2,018	+1,306	-2,171	+1,329	-2,077	+1,118	-2,597	+1,539	-2,597	+1,118	-2,225	+1,215	-2,202	+894	-2,372	+895	-1,920
	Allow. Stress	20.0	20.0	20.0	20.0	20.0	20.0	20.0	20.0	20.0	20.0	20.0	20.0	20.0	20.0	20.0	18.0	20.0	19.0	20.0
	S.M. Required	0	677	1,211	784	1,302	797	1,246	671	1,558	923	1,558	671	1,335	729	1,321	599	1,423	564	1,152
	S.M. Provided	855	855	1,313	855	1,420	855	1,313	855	1,634	962	1,634	855	1,420	855	1,420	855	1,527	855	1,205
	Design Shear	101		108		112		116		127		125		116		106		104		104
	Area req. @ 12 ksi	4.3		9.0		9.4		9.7		10.6		10.4		9.7		9.7		8.7		8.7
	Area Provided	27.0		27.0		27.0		27.0		27.0		27.0		27.0		27.0		27.0		27.0

			Pier 9S		Pier 8S		Pier 7S		Pier 6S		Pier 5S		Pier 4S		Pier 3S		Pier 2S		Pier 1S		South Anchor Pier
MOMENT	Dead Load	+447	-1,000	+476	-1,000	+207	-1,143	+240	-1,143	+447	-1,143	+476	-1,143	+349	-1,143	+463	-1,070	+292	-1,382	+845	0
	Max. Live Load	+513	-750	+485	-665	+560	-824	+533	-641	+513	-641	+485	-556	+734	-824	+594	-864	+584	-1,010	+747	0
	Max. Impact	+117	-172	+111	-148	+127	-196	+123	-145	+116	-145	+110	-124	+166	-196	+135	-200	+132	-229	+172	0
	Maximum Moment	+1,077	-1,922	+1,072	-1,813	+894	-2,163	+896	-1,929	+1,076	-1,929	+1,071	-1,823	+1,249	-2,163	+1,192	-2,134	+1,008	-2,621	+1,764	0
	Min. Live Load	-234	+171	-155	+146	-331	+252	-282	+386	-234	+386	-155	+255	-412	+252	-303	+231	-304	+168	-185	0
	Min. Impact	-52	+37	-35	+36	-75	+58	-64	+71	-53	+71	-35	+59	-93	+58	-69	+48	-69	+38	-42	0
	Minimum Moment	+161	-792	+286	-818	-199	-833	-106	-686	+160	-686	+286	-829	-156	-833	+91	-791	-81	-1,176	+618	0
SHEAR	Dead Load		+55		+61		+62		+61		-59		-59		-59		-59		+77		-50
	Max. Live Load		+38		+41		+43		+44		-43		-43		-43		-43		+46		-38
	Max. Impact		+9		+9		+10		+10		-10		-10		-10		-10		+10		-9
	Maximum Shear		+102		+111		+115		+115		-112		-112		-112		-112		+133		-97
	Min. Live Load		-6		-6		-6		-6		+7		+7		+7		+7		-1		+1
	Min. Impact		-1		-1		-1		-1		+2		+2		+2		+2		—		—
	Minimum Shear		+48		+54		+55		+54		-50		-50		-50		-50		+76		-49
	Design Moment	+1,077	-1,922	+1,072	-1,813	+894	-2,163	+896	-1,929	+1,076	-1,929	+1,071	-1,823	+1,249	-2,163	+1,192	-2,134	+1,008	-2,621	+1,764	0
	Allow. Stress	20.0	20.0	20.0	20.0	18.0	20.0	19.0	20.0	20.0	20.0	20.0	20.0	18.8	20.0	20.0	20.0	19.4	20.0	20.0	20.0
	S.M. Required	646	1,153	643	1,088	599	1,298	564	1,157	646	1,157	643	1,094	799	1,298	715	1,280	625	1,573	1,058	0
	S.M. Provided	855	1,205	855	1,099	855	1,313	855	1,205	855	1,205	855	1,099	855	1,313	855	1,313	855	1,634	1,070	—
	Design Shear		102		111		115		115		112		112		112		112		133		97
	Area req. @ 12 ksi		8.5		9.3		9.6		9.6		9.4		9.4		9.4		9.4		11.1		8.1
	Area Provided		27.0		27.0		27.0		27.0		27.0		27.0		27.0		27.0		27.0		15.6

71'-8" | 3 Spans @ 95'-8" = 287'-0" | 112'-0" | 14 Spans @ 95'-8" = 1,339'-4"

STRINGER STRESS SHEET

Moments of center of Spans and over Supports
Shear at Supports

UNITS

Moment	Foot-kips
Shear	Kips
Unit Stress	Kips per square inch
Section Modulus	Inches cubed
Area	Square inches

NOTE:
Maximum shear is the larger of the two shear values at each bearing.

NEW HAMPSHIRE

DEAD LOAD DEFLECTIONS FOR STRINGERS

LOAD	Pier 18 →			Pier 17 →				Pier 16 →				Pier 15 →			
	18 3/4	18 1/2	18 1/4	17 4/5	17 3/5	17 2/5	17 1/5	16 4/5	16 3/5	16 2/5	16 1/5	15 4/5	15 3/5	15 2/5	15 1/5
Steel	1/16	1/16	1/16	1/16	1/8	1/8	1/16	1/16	3/16	3/16	1/16	1/16	1/16	1/16	1/16
Concrete	1/4	5/16	1/4	5/16	5/8	5/8	1/4	5/16	5/8	5/8	3/8	1/4	7/16	3/8	1/8
Asphalt	1/16	1/16	—	1/16	1/16	1/16	1/16	1/16	1/16	1/16	1/16	—	1/16	1/16	—
TOTAL	3/8	7/16	5/16	7/16	13/16	13/16	3/8	7/16	7/8	7/8	1/2	5/16	9/16	1/2	3/16

LOAD	Pier 14 →				Pier 13 →				Pier 12 →				Pier 11 →			
	14 4/5	14 3/5	14 2/5	14 1/5	13 4/5	13 3/5	13 2/5	13 1/5	12 4/5	12 3/5	12 2/5	12 1/5	11 4/5	11 3/5	11 2/5	11 1/5
Steel	1/16	3/16	3/16	1/16	1/16	1/16	1/16	1/16	1/16	3/16	3/16	1/16	1/16	1/16	1/16	1/16
Concrete	1/4	5/8	5/8	1/4	1/4	1/4	1/4	1/8	3/8	11/16	5/8	5/16	3/16	7/16	7/16	3/16
Asphalt	1/16	1/16	1/16	1/16	—	—	1/16	—	1/16	1/16	1/16	1/16	—	1/16	1/16	—
TOTAL	3/8	7/8	7/8	3/8	5/16	5/16	3/8	3/16	1/2	15/16	7/8	7/16	1/4	9/16	9/16	1/4

LOAD	Pier 10 →				Pier 9 →				Pier 8 →				Pier 7 →			
	10 4/5	10 3/5	10 2/5	10 1/5	9 4/5	9 3/5	9 2/5	9 1/5	8 4/5	8 3/5	8 2/5	8 1/5	7 4/5	7 3/5	7 2/5	7 1/5
Steel	1/16	1/16	1/16	1/16	1/16	1/16	1/16	1/16	1/16	1/16	1/16	1/16	1/16	1/8	1/8	1/16
Concrete	3/16	3/8	3/8	1/8	1/8	5/16	5/16	1/8	1/8	5/16	5/16	1/8	1/4	7/16	7/16	3/16
Asphalt	—	1/16	1/16	—	—	1/16	1/16	—	—	1/16	1/16	—	—	1/16	1/16	—
TOTAL	1/4	1/2	1/2	3/16	3/16	7/16	7/16	3/16	3/16	7/16	7/16	3/16	5/16	5/8	5/8	1/4

LOAD	Pier 6 →				Pier 5 →				Pier 4 →				Pier 3 →			
	6 4/5	6 3/5	6 2/5	6 1/5	5 4/5	5 3/5	5 2/5	5 1/5	4 4/5	4 3/5	4 2/5	4 1/5	3 4/5	3 3/5	3 2/5	3 1/5
Steel	1/16	1/16	1/16	—	—	1/16	1/16	—	—	1/16	1/16	—	—	1/16	1/16	1/16
Concrete	1/8	5/16	5/16	1/8	1/8	1/4	1/4	1/8	1/8	1/4	1/4	1/8	1/8	5/16	5/16	1/8
Asphalt	—	1/16	1/16	—	—	1/16	1/16	—	—	1/16	1/16	—	—	1/16	1/16	—
TOTAL	3/16	7/16	7/16	1/8	1/8	3/8	3/8	1/8	1/8	3/8	3/8	1/8	1/8	7/16	7/16	3/16

LOAD	Pier 2 →				Pier 1 →				So. Anch. Pier →			
	2 4/5	2 3/5	2 2/5	2 1/5	1 4/5	1 3/5	1 2/5	1 1/5	4/5	3/5	2/5	1/5
Steel	1/16	1/16	1/16	1/16	—	1/16	1/16	—	1/16	1/8	3/16	1/8
Concrete	1/8	3/8	3/8	3/16	1/8	1/4	1/4	1/8	3/8	13/16	7/8	5/8
Asphalt	—	1/16	1/16	—	—	1/16	1/16	—	1/16	1/8	1/8	1/16
TOTAL	3/16	1/2	1/2	1/4	1/8	3/8	3/8	1/8	1/2	1 1/16	1 3/16	13/16

Stringers 1- 19 | Stringers 1-17 | Stringers 1- 16 | Stringers 1-14

DEAD LOAD DEFLECTIONS FOR STRINGERS

3

DESIGN — [illegible]
TRACE — A. P. Tchenkeli
CHECK — S. [illegible]

BRIDGE NO. IN CHARGE OF — R. W. Christie

NEW HAMPSHIRE
DEPARTMENT OF PUBLIC WORKS AND HIGHWAYS
AND
MAINE STATE HIGHWAY COMMISSION
INTERSTATE 95 BRIDGE
OVER
PISCATAQUA RIVER
BETWEEN
PORTSMOUTH, NEW HAMPSHIRE AND KITTERY, MAINE

STRINGER DATA

SHEET 18 OF 23

HARDESTY & HANOVER
CONSULTING ENGINEERS
NEW YORK, N. Y.

129-46

B. P. R. REG. NO.	STATE	PROJECT NUMBER	SHEET NO.	TOTAL SHEETS
1	MAINE	I-95-1(22)16	19	23

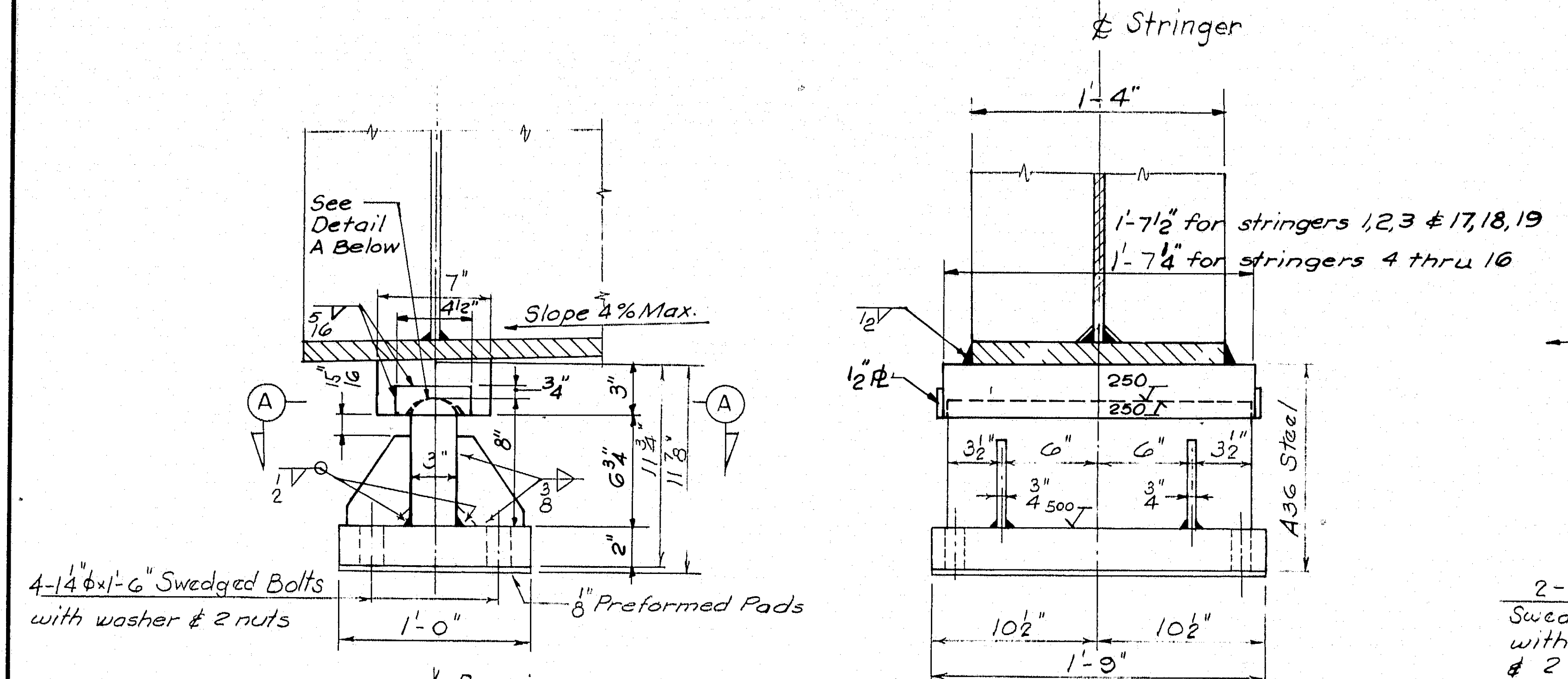

¢ Stringer
1'-4"
See Detail A Below
Slope 4% Max.
1'-7½" for stringers 1,2,3 ¢ 17,18,19
1'-7¼" for stringers 4 thru 16
½" ℞
250
500
A36 Steel
4-1¼"φ×1'-6" Swedged Bolts with washer ¢ 2 nuts
⅛" Preformed Pads
1'-0"
10½"
1'-9"

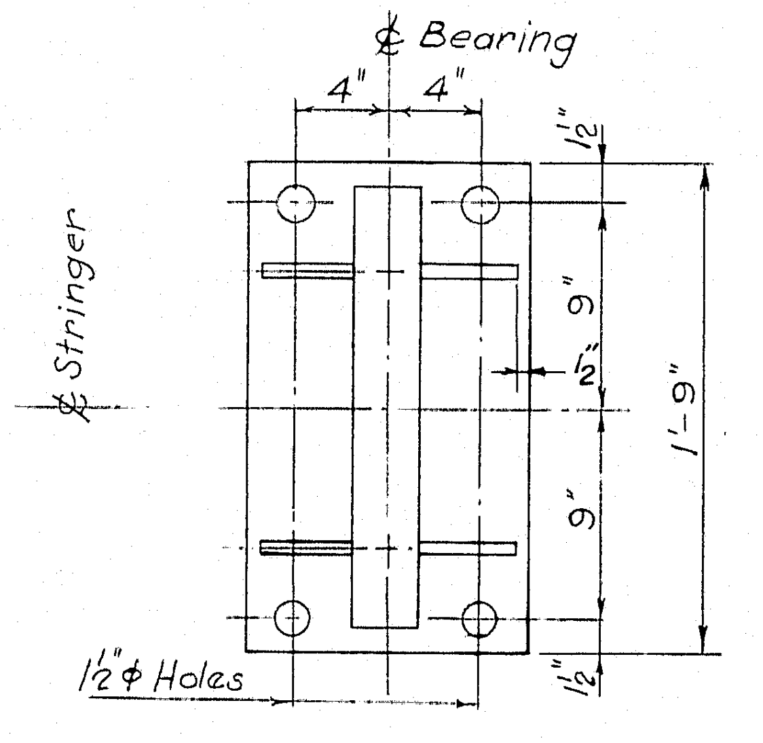

¢ Bearing
¢ Stringer
4"
9"
1'-9"
1½"φ Holes

SECTION A-A

FIXED SHOES
(AT ABUTMENTS)
SCALE: 1½" = 1'-0"

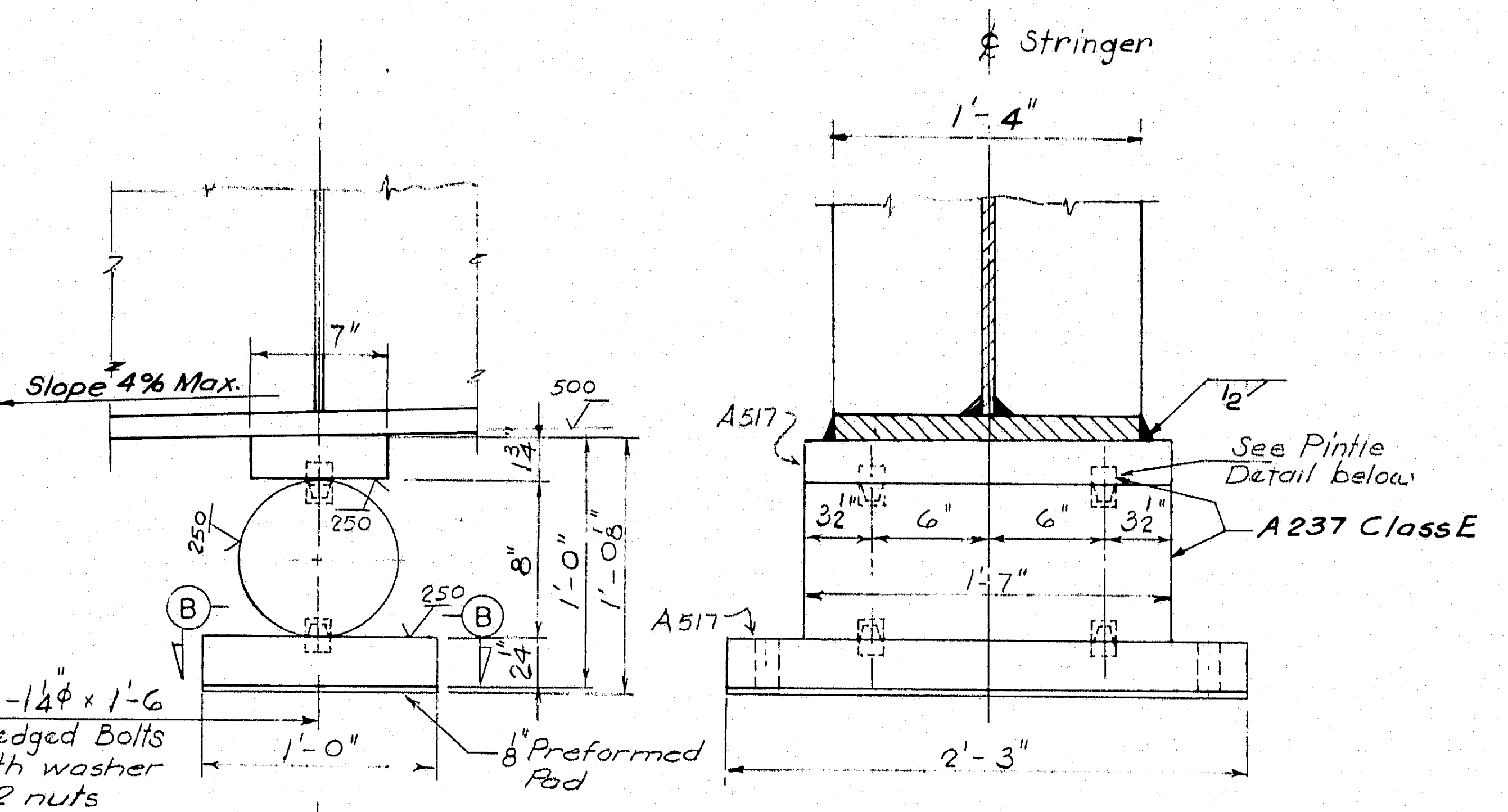

¢ Stringer
1'-4"
Slope 4% Max.
7"
500
250
A517
See Pintle Detail below
A237 Class E
2-1¼"φ × 1'-6 Swedged Bolts with washer ¢ 2 nuts
⅛" Preformed Pad
1'-0"
1'-7"
2'-3"

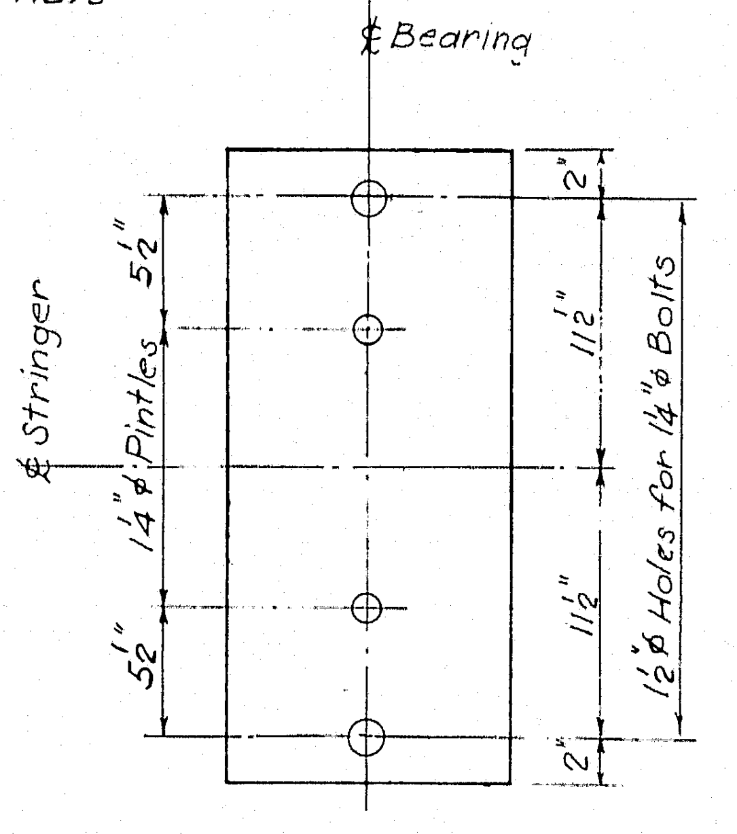

¢ Bearing
¢ Stringer
1¼"φ Pintles
1½"φ Holes for 1¼"φ Bolts
11½"
5½"
2"

SECTION B-B

Note: Anchor Bolts for shoes
to be furnished, and bolt
holes to be drilled and
grouted under this
Contract.

EXPANSION SHOES
SCALE: 1½" = 1'-0"

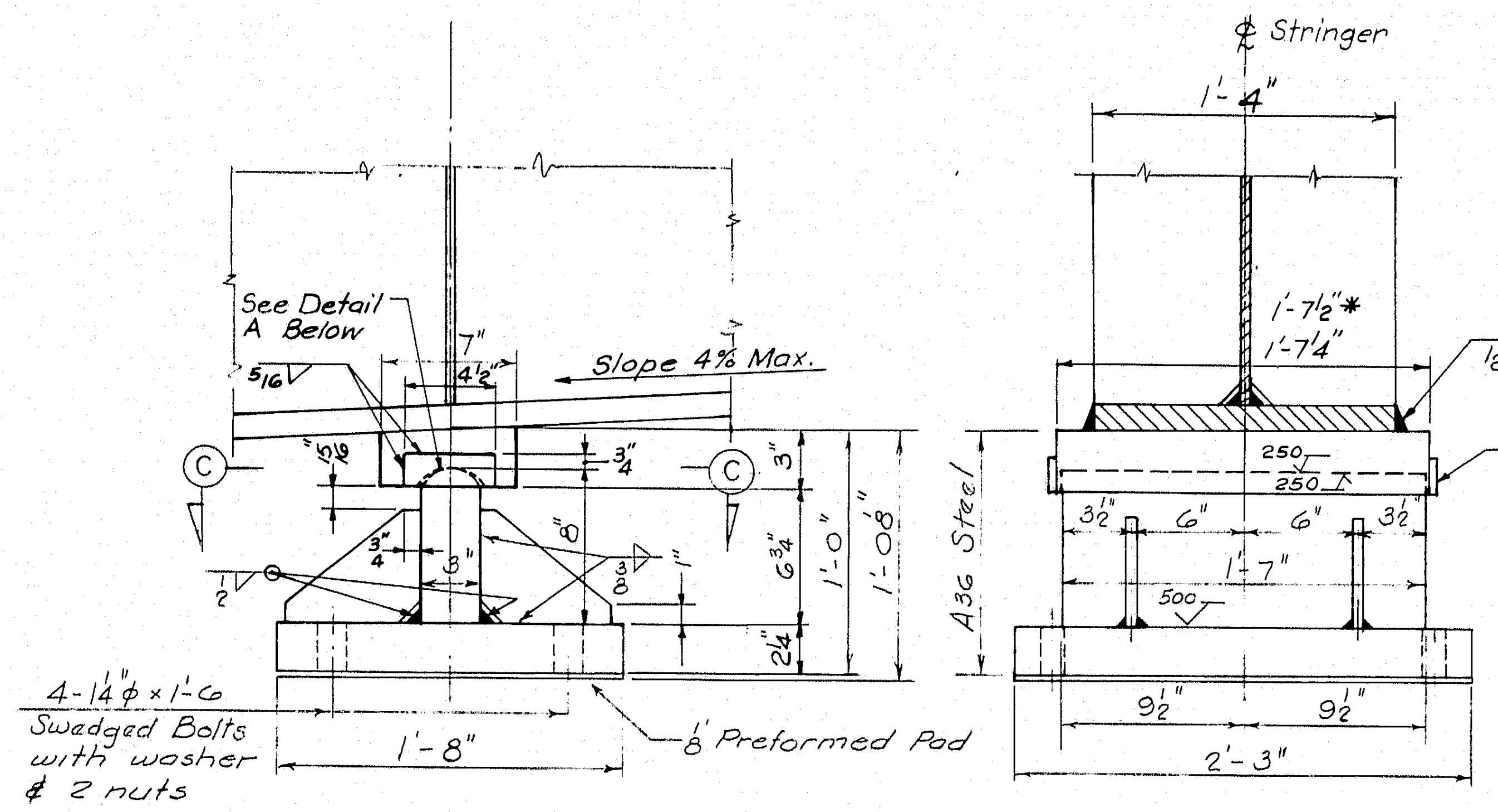

¢ Stringer
1'-4"
See Detail A Below
Slope 4% Max.
1'-7½"*
1'-7¼"
A36 Steel
4-1¼"φ × 1'-6 Swedged Bolts with washer ¢ 2 nuts
⅛" Preformed Pad
1'-8"
1'-7"
2'-3"
9½"

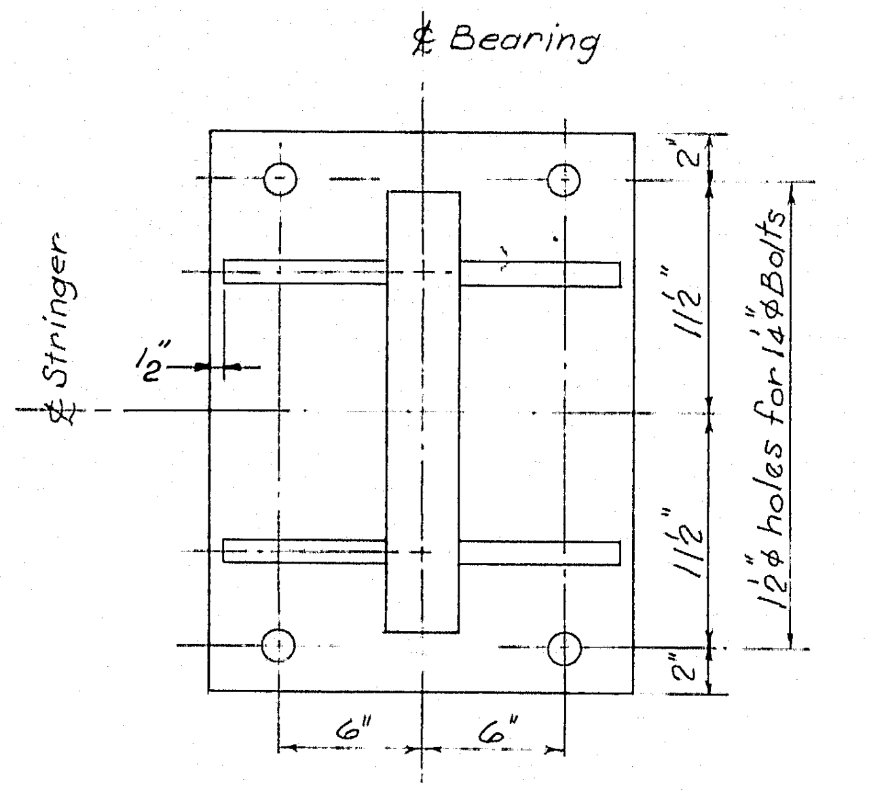

¢ Bearing
¢ Stringer
11½"
1½"φ holes for 1¼"φ Bolts
6"

SECTION C-C

FIXED SHOES (AT PIERS)
SCALE: 1½" = 1'-0"

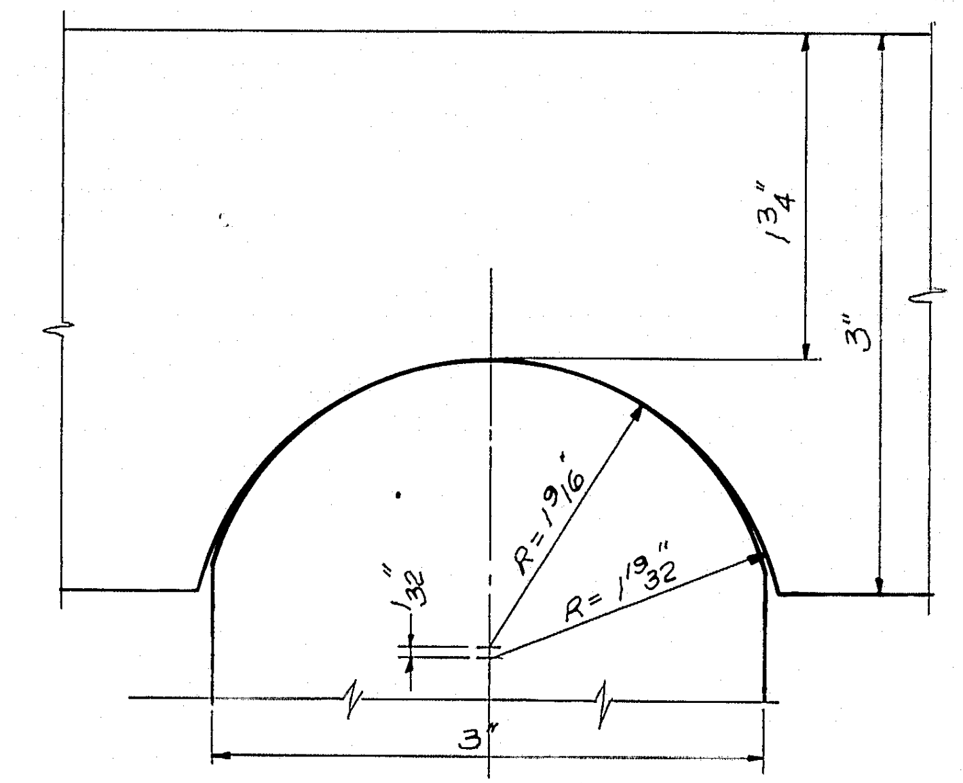

1¾"
3"
R=1⁹⁄₁₆"
R=1¹⁹⁄₃₂"
3"

DETAIL "A"
No Scale

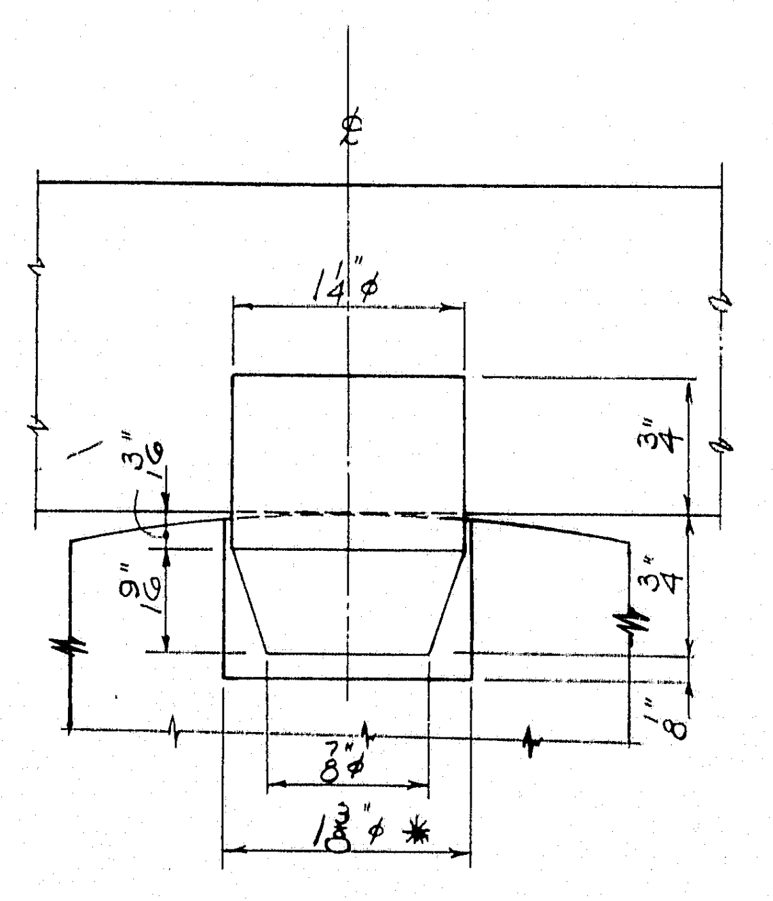

PINTLE DETAIL
SCALE 12" = 1'-0"

*Note: Provide elongated holes,
1⅜" × 1¾" for pintles in outer 2 stringers
at each edge of each half of the
structure to allow for transverse
expansion of structure. For example, in a typical section
having 14 stringers, stringers 1,2,6,7,8,9,13 ¢ 14
would have elongated holes for
expansion shoes and 1'-7½" for
fixed shoes as noted.

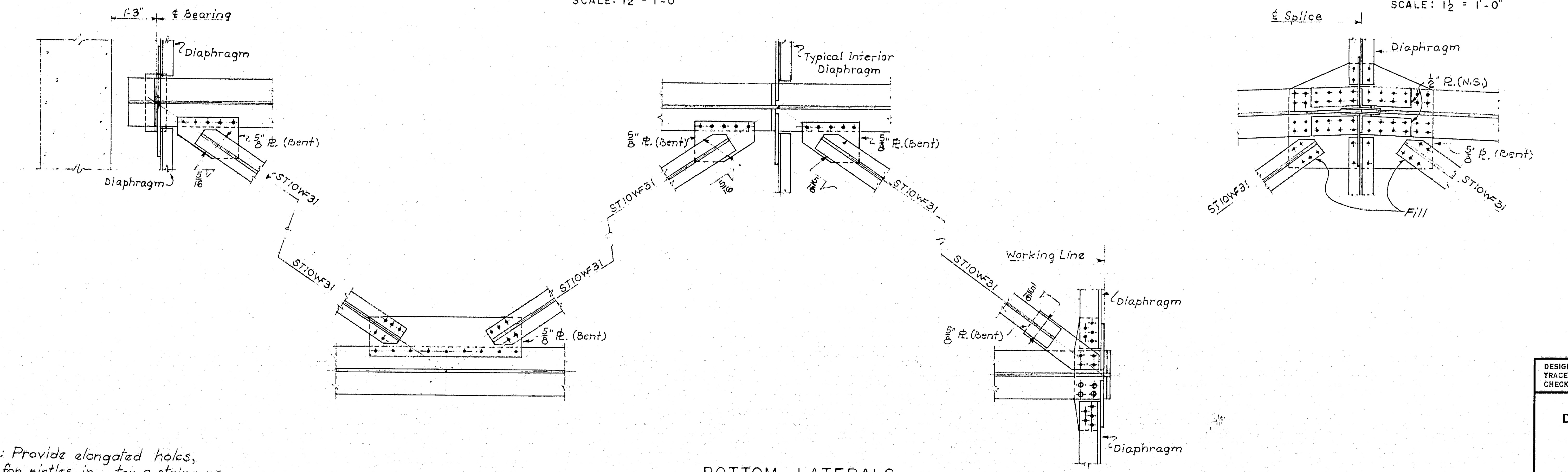

1'-3"
¢ Bearing
Diaphragm
⅝" ℞ (Bent)
ST10WF31
Typical Interior Diaphragm
¢ Splice
½" ℞ (N.S.)
Fill
Working Line

BOTTOM LATERALS
SCALE: ½" = 1'-0"

3

DESIGN – A. Krywoschy
TRACE – A. J. Mostowicz
CHECK – S. Nishimura

BRIDGE NO.
IN CHARGE OF – R.W. Christie

NEW HAMPSHIRE
DEPARTMENT OF PUBLIC WORKS AND HIGHWAYS
AND
MAINE STATE HIGHWAY COMMISSION
INTERSTATE 95 BRIDGE
OVER
PISCATAQUA RIVER
BETWEEN
PORTSMOUTH, NEW HAMPSHIRE AND KITTERY, MAINE
APPROACH SPANS
SHOES
BOTTOM LATERALS
SHEET 19 OF 23

HARDESTY & HANOVER
CONSULTING ENGINEERS
NEW YORK, N. Y.

129-47

B. P. R. REG. NO.	STATE	PROJECT NUMBER	SHEET NO.	TOTAL SHEETS
1	MAINE	I-95-1(22)16	20	23

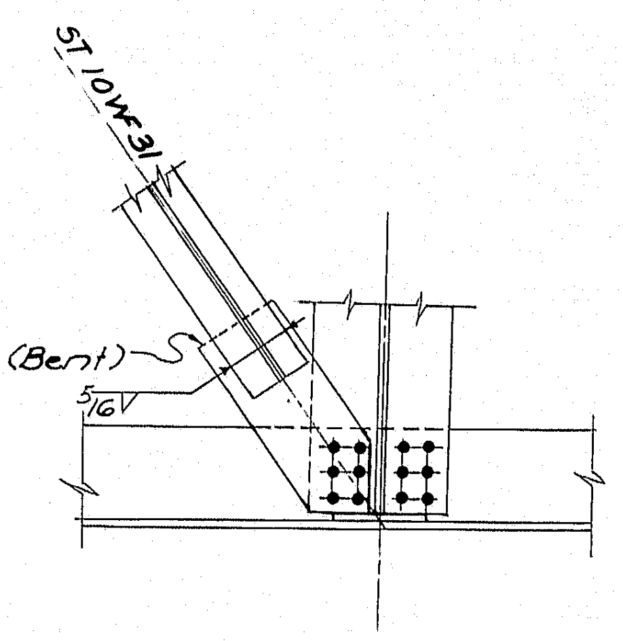

ST10WF31
5/8" ℙ (Bent)
5/16 V

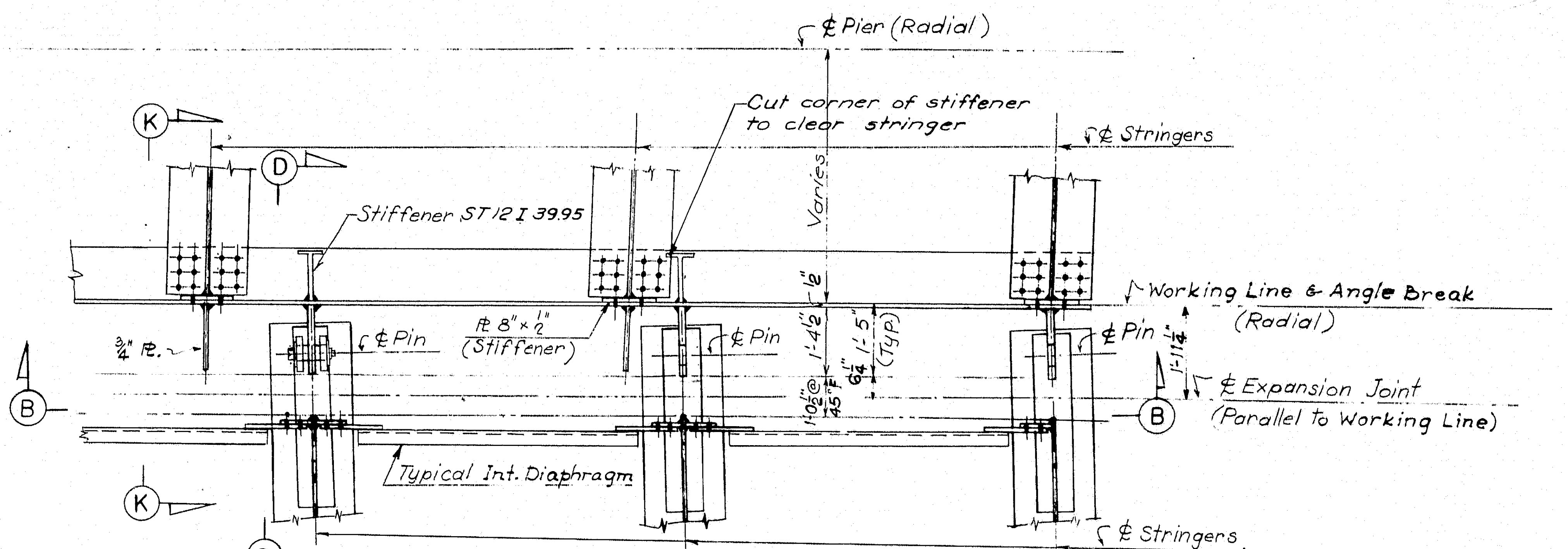

℄ Pier (Radial)
Cut corner of stiffener to clear stringer
℄ Stringers
Stiffener ST12I 39.95
Varies
ℙ 8" × 1/2" (Stiffener)
℄ Pin
Working Line & Angle Break (Radial)
℄ Expansion Joint (Parallel to Working Line)
Typical Int. Diaphragm
℄ Stringers
K
D
B

PLAN SECTION A-A

SCALE: 1/2" = 1'-0"

Slope Down — Spans 16S-15S

Slope Down — Spans 8S-9S, 13S-14S

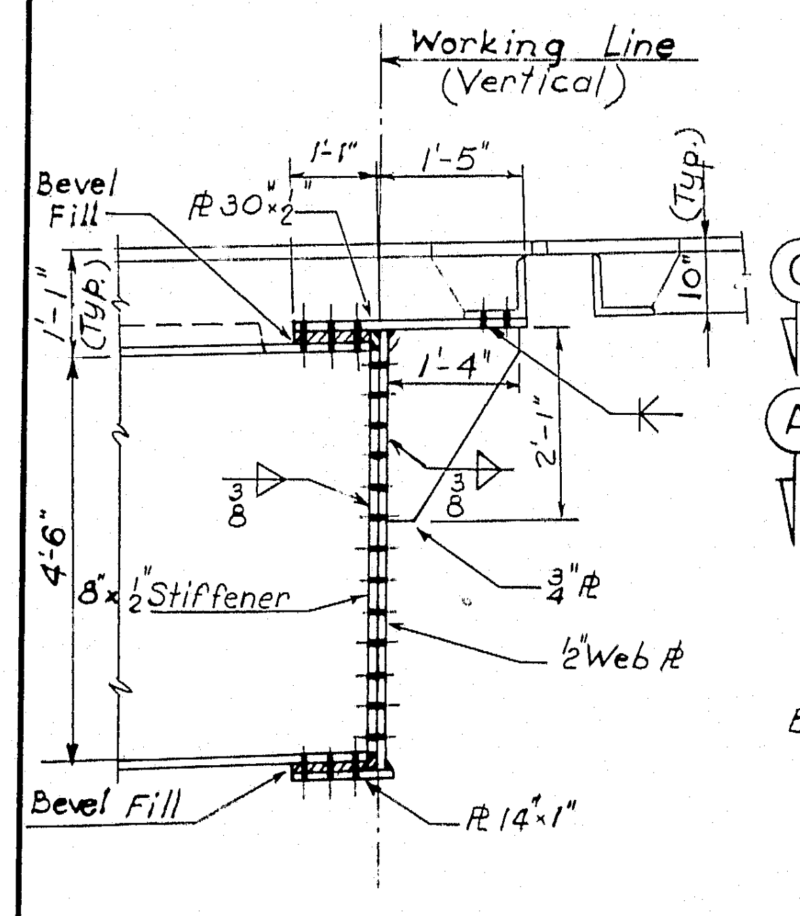

Working Line (Vertical)
Bevel Fill
ℙ 30" × 1/2"
1'-1"
1'-5"
1'-4"
10" (Typ.)
4'-6"
8" × 1/2" Stiffener
1/2" Web ℙ
3/4" ℙ
Bevel Fill
ℙ 14" × 1"

SECTION K-K

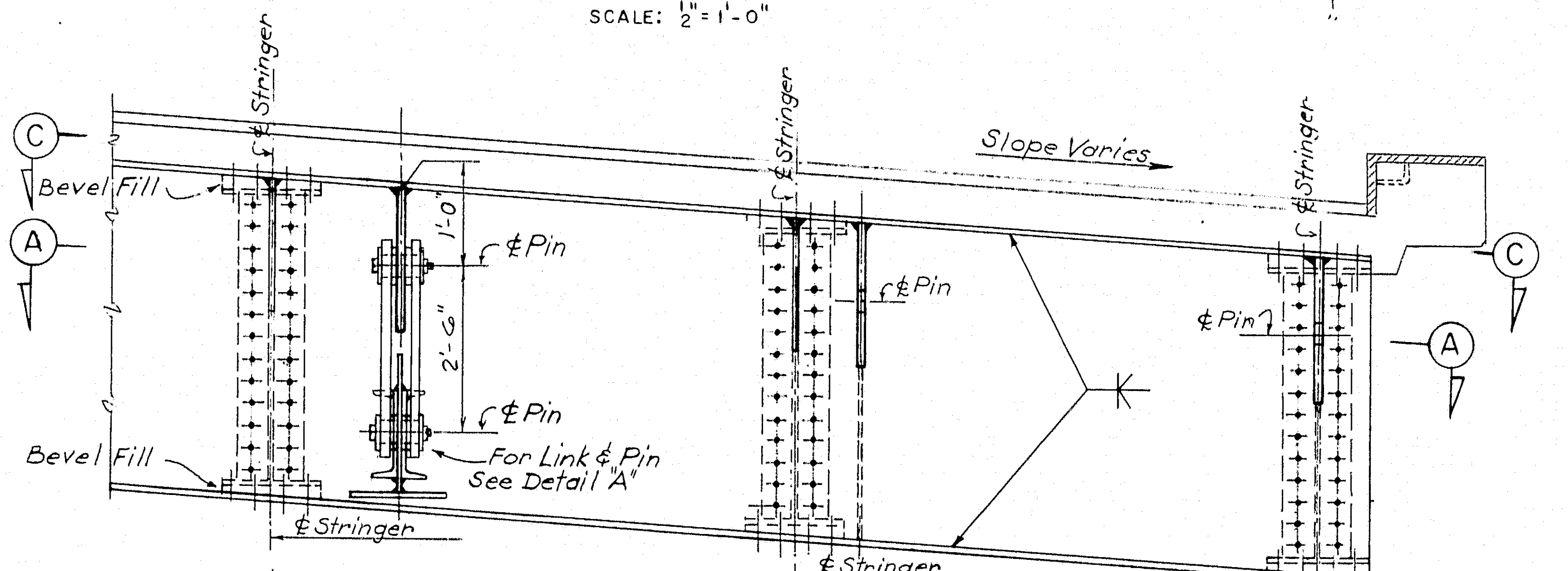

C
A
Bevel Fill
℄ Stringer
Slope Varies
℄ Pin
2'-6"
For Link & Pin See Detail "A"
Bevel Fill
℄ Stringer

SECTION B-B

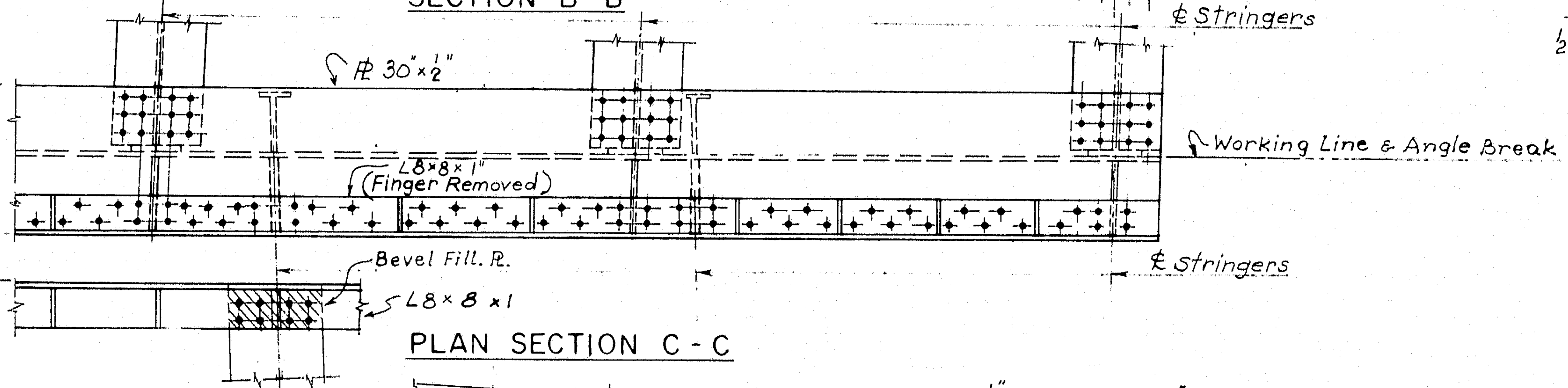

℄ Stringers
ℙ 30" × 1/2"
2'-6"
L 8 × 8 × 1 (Finger Removed)
Working Line & Angle Break
1'-0 1/2" @ 45°F
Bevel Fill. ℙ.
L 8 × 8 × 1
℄ Stringers

PLAN SECTION C-C

Slope Down — Spans 16S-15S

Slope Down — Spans 8S-9S, 13S-14S

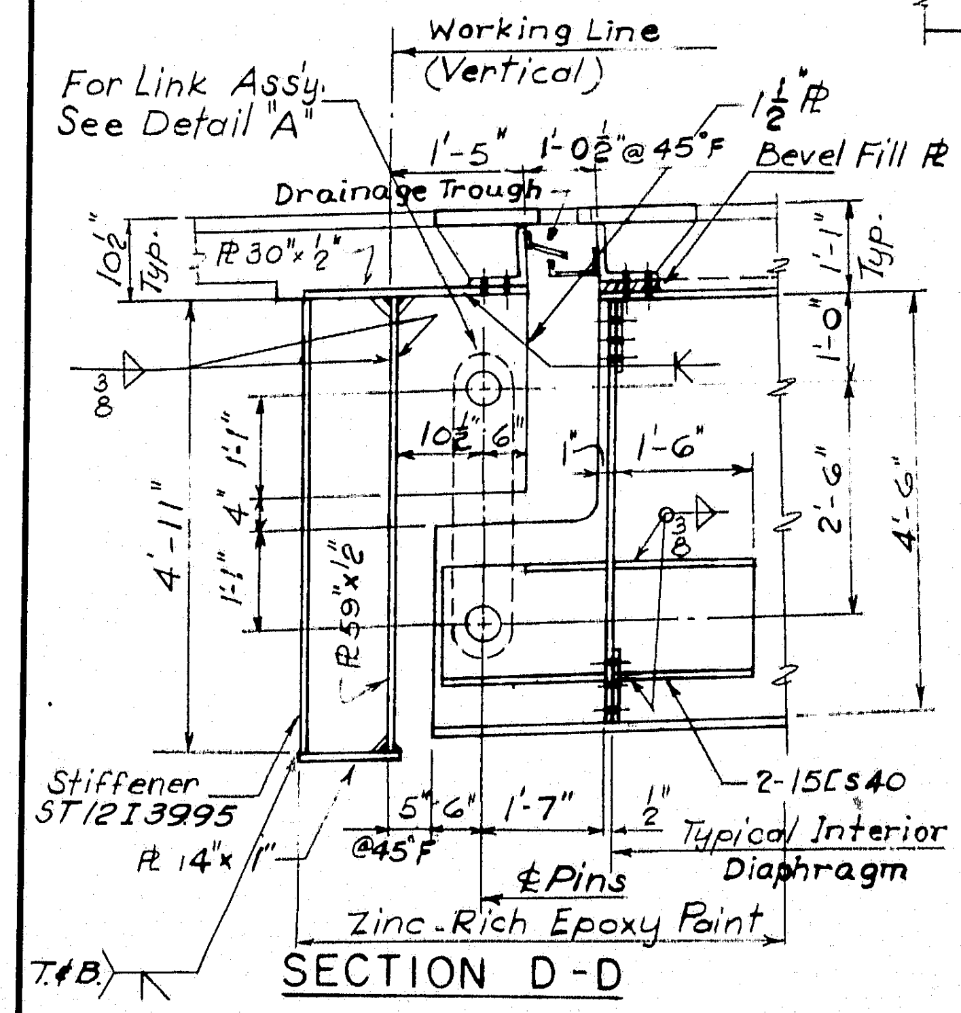

Working Line (Vertical)
For Link Assy. See Detail "A"
1'-5"
1'-0 1/2" @ 45°F
1 1/2" ℙ
Bevel Fill ℙ
Drainage Trough
ℙ 30" × 1/2"
4'-1"
1'-6"
2'-6"
4'-6"
ℙ 59" × 1/2"
Stiffener ST12I 39.95
ℙ 14" × 1"
@ 45°F
5'-6"
1'-7"
℄ Pins
2-15⊏40
Typical Interior Diaphragm
Zinc-Rich Epoxy Paint
T. & B.

SECTION D-D

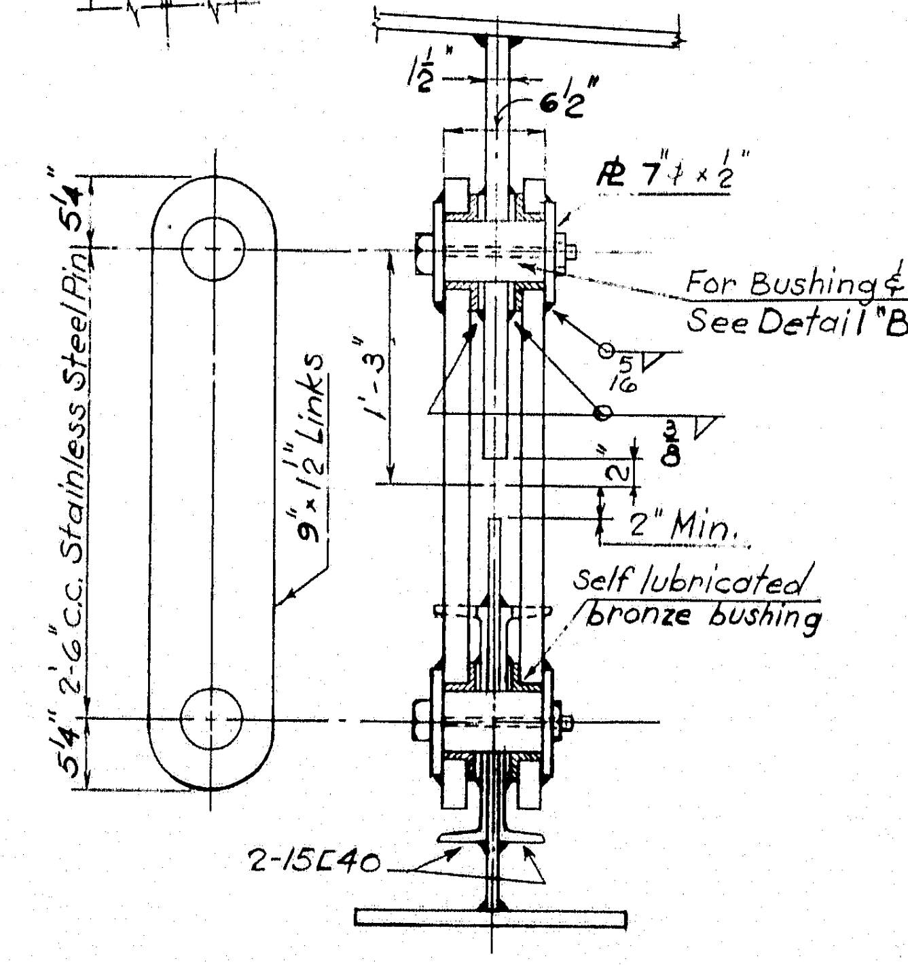

1 1/2"
6 1/2"
ℙ 7" × 1/2"
For Bushing & Pin See Detail "B"
5 1/4" Stainless Steel Pin
1'-3"
9 × 1 1/4" Links
2'-6" C.C.
2" Min.
Self lubricated bronze bushing
2-15⊏40

DETAIL "A"

SCALE: 1" = 1'-0"

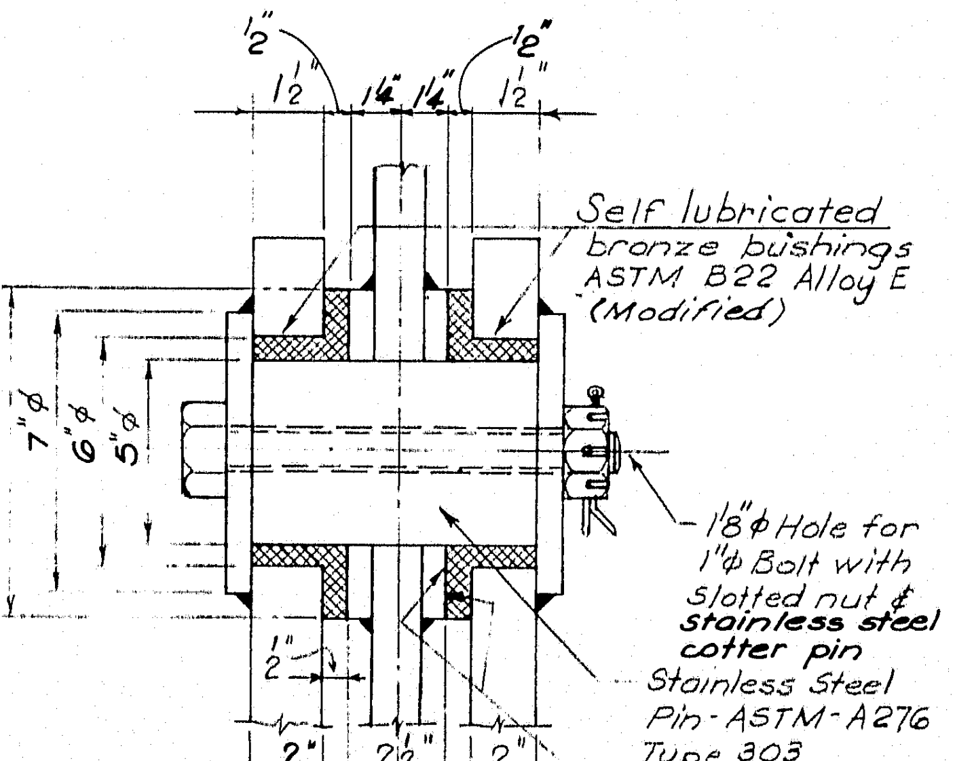

Self lubricated bronze bushings ASTM B22 Alloy E (Modified)
8"⌀
7"⌀
6"⌀
5"⌀
1 1/8"⌀ Hole for 1"⌀ Bolt with slotted nut & stainless steel cotter pin
Stainless Steel Pin - ASTM - A276 Type 303

ASA Class Fit	FN2		FN2
Bushing in Link	6"⌀		6"⌀
ASA Class Fit	RC8	FN2	RC8
Pin to Hole	5"⌀	5"⌀	5"⌀

DETAIL "B"

SCALE: 3" = 1'-0"

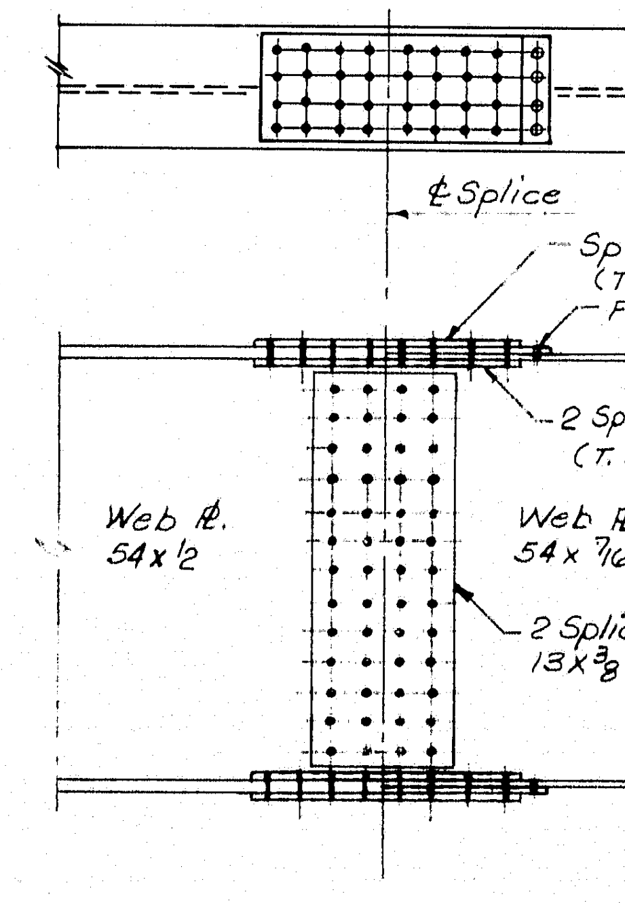

℄ Splice
Splice ℙ 15 × 1/2 (T. & B.)
Fill - As Req'd.
2 Splice ℙs. 6 1/2 × 1/2 (T. & B.)
Web ℙ. 54 × 1/2
Web ℙ. 54 × 7/16
2 Splice ℙs. 18 × 3/8

TYPICAL SPLICE

Except for Type "G" Stringer

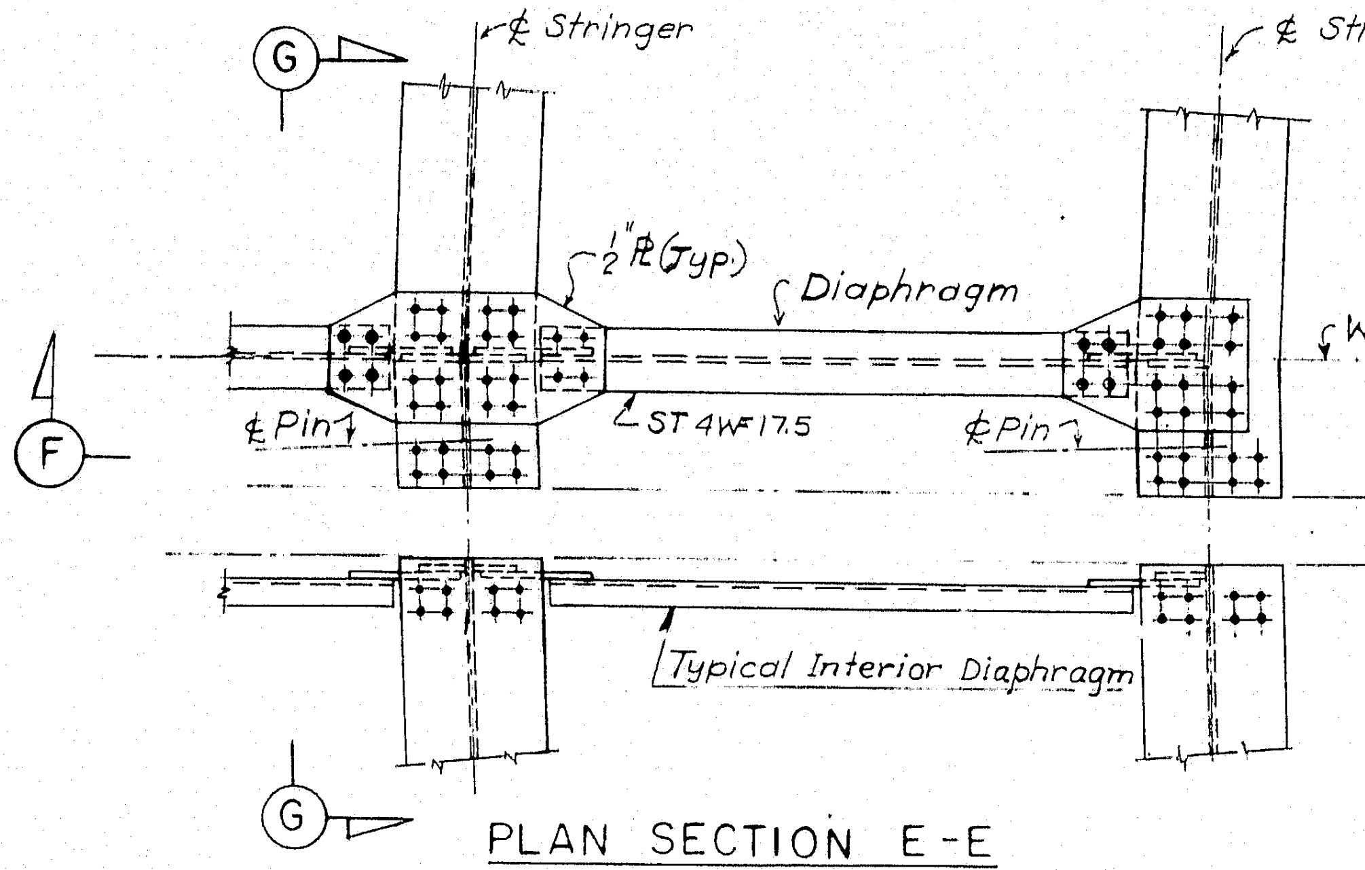

G
℄ Stringer
1/2" ℙ (Typ.)
Diaphragm
Working Line & Angle Break (Span 4S-5S, Span 13S-14S) (Radial)
℄ Pin
ST 4WF 17.5
F
℄ Expansion Joint
Typical Interior Diaphragm

PLAN SECTION E-E

Slope Down — Spans 4S-5S, 13S-14S

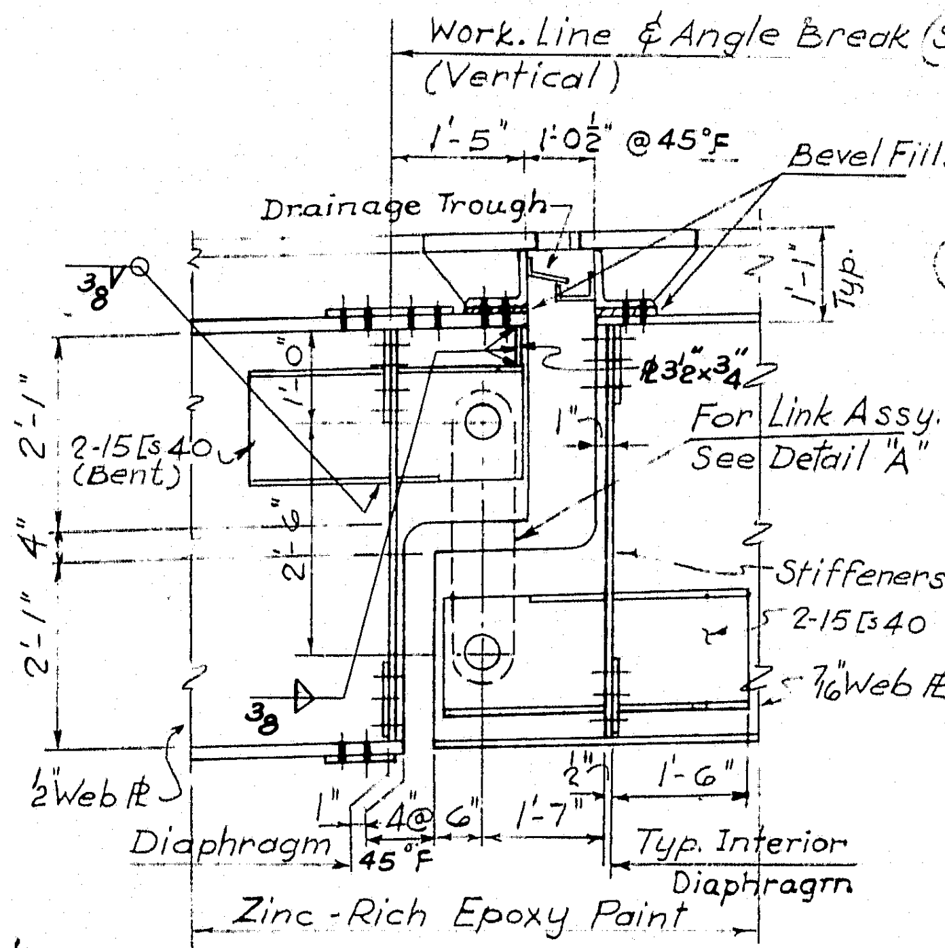

Work. Line & Angle Break (Span 4S-5S & 13S-14S) (Vertical)
1'-5"
1'-0 1/2" @ 45°F
Bevel Fills
Drainage Trough
2-15⊏40 (Bent)
For Link Assy. See Detail "A"
Stiffeners 2-15⊏40
7/16" Web ℙ
1/2" Web ℙ
Diaphragm
4 @ 45°F
1'-7"
1'-6"
Typ. Interior Diaphragm
Zinc-Rich Epoxy Paint

SECTION G-G

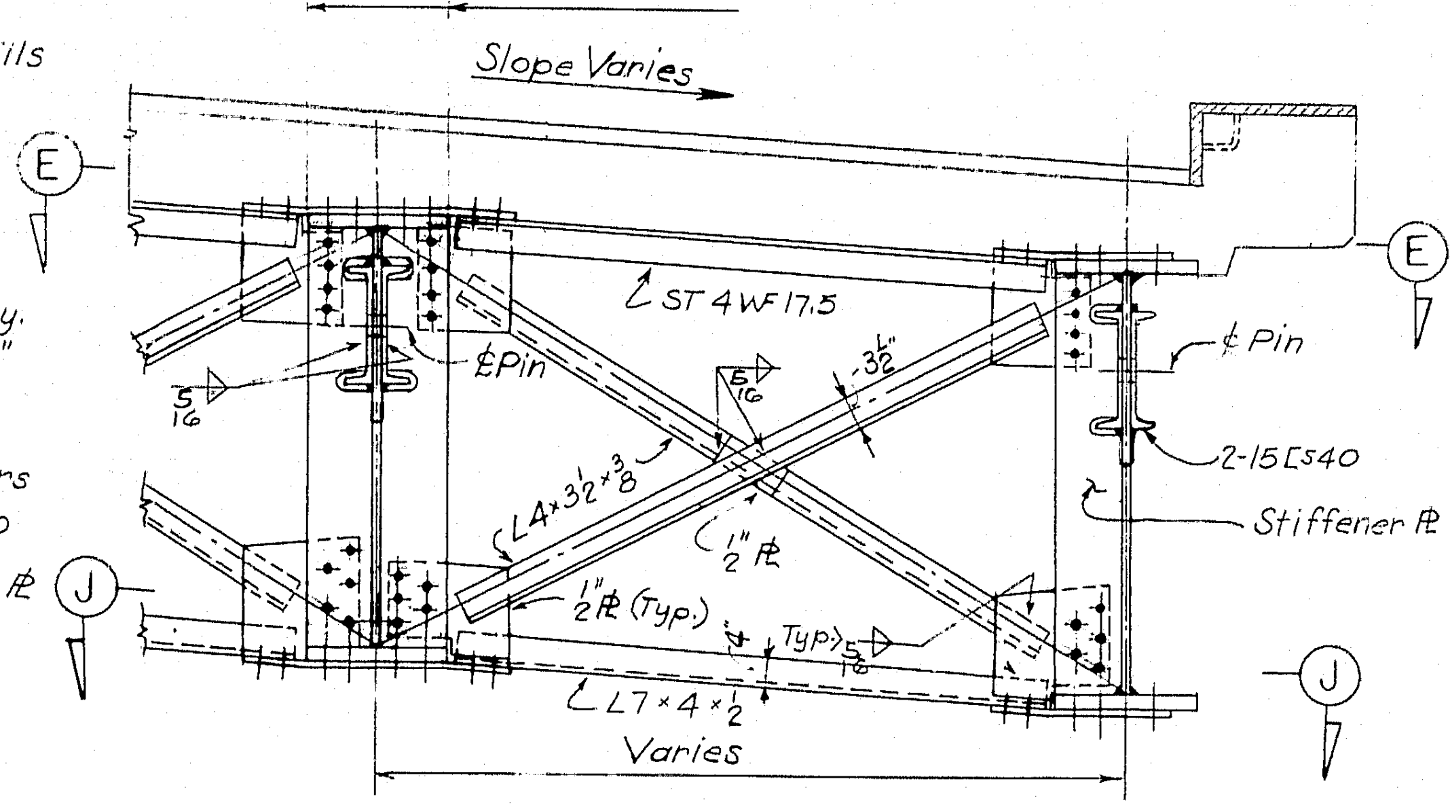

Bent Gusset ℙ
Slope Varies
E
ST 4WF 17.5
℄ Pin
2-15⊏40
Stiffener ℙ 7" × 1/2"
L 4 × 3 1/2 × 3/8
1/2" ℙ
1/2" ℙ (Typ.)
L 7 × 4 × 1/2
Varies
J

SECTION F-F

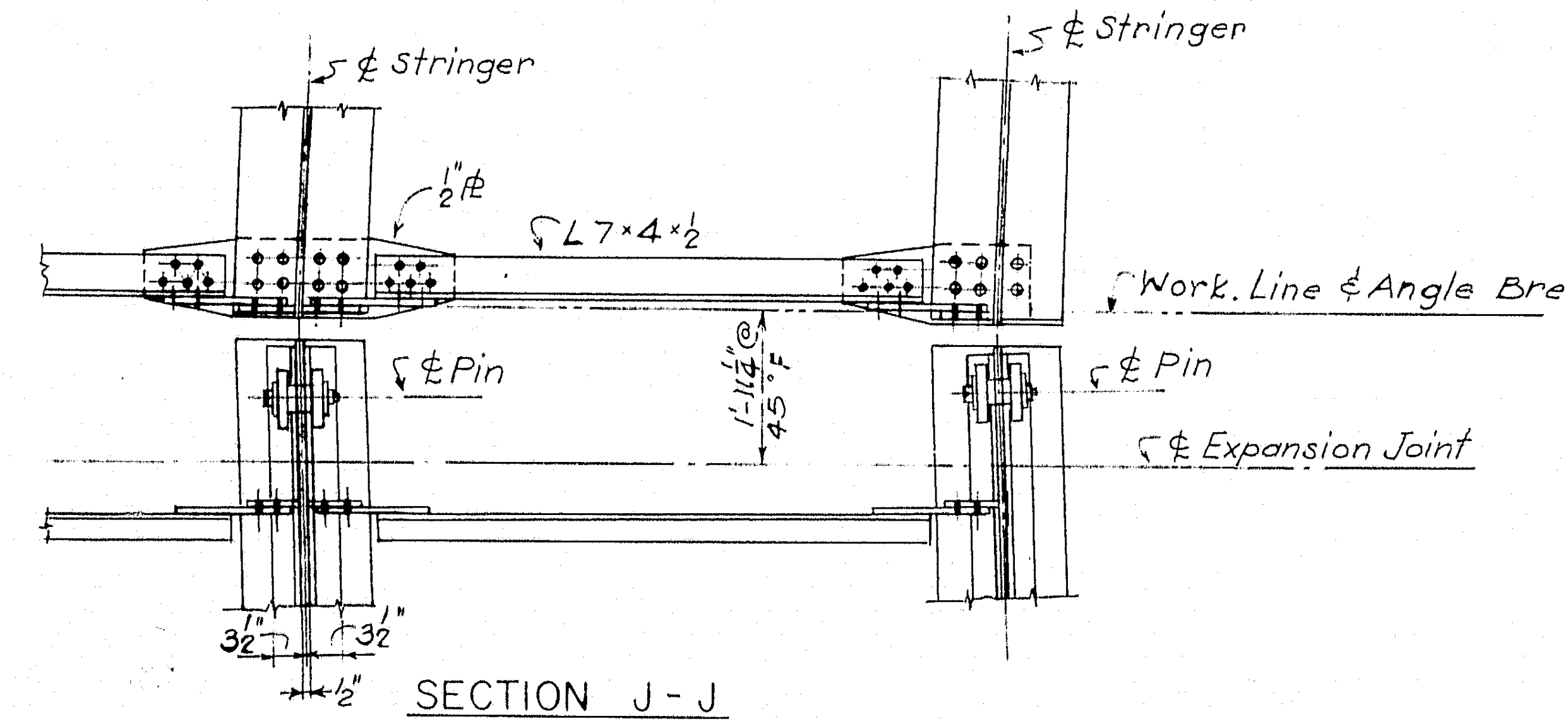

℄ Stringer
1/2" ℙ
L 7 × 4 × 1/2
Work. Line & Angle Break
℄ Pin
℄ Expansion Joint
1'-11 1/2" @ 45°F
3 1/2"

SECTION J-J

3

DESIGN — A. Kryworchy

TRACE — A. J. Mostowicz

CHECK — S. Nishimura

BRIDGE NO. IN CHARGE OF — R. W. Christie

NEW HAMPSHIRE
DEPARTMENT OF PUBLIC WORKS AND HIGHWAYS
AND
MAINE STATE HIGHWAY COMMISSION
INTERSTATE 95 BRIDGE
OVER
PISCATAQUA RIVER
BETWEEN
PORTSMOUTH, NEW HAMPSHIRE AND KITTERY, MAINE
APPROACH SPANS

STEEL DETAILS I

SHEET 20 OF 23

HARDESTY & HANOVER
CONSULTING ENGINEERS
NEW YORK, N. Y.

129-48

B.P.R. REG. NO.	STATE	PROJECT NUMBER	SHEET NO.	TOTAL SHEETS
1	MAINE	I-95-1(22)16	21	23

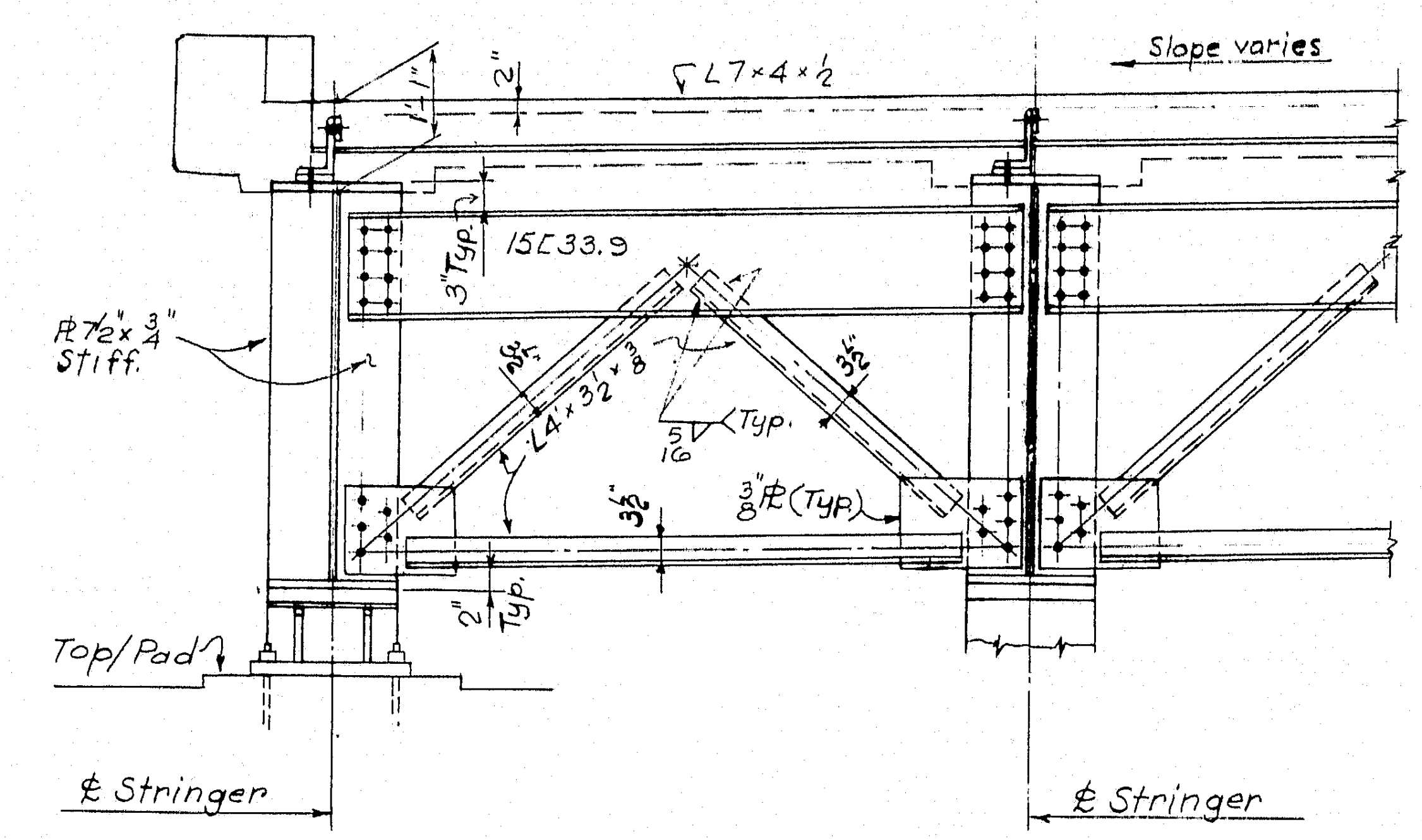
Slope varies
L7×4×½
2"
15⊏33.9
3"Typ.
℄ 7½×¾" Stiff.
L4×3½×⅜
Typ.
⅜(Typ.)
Top/Pad
℄ Stringer
℄ Stringer

TYPICAL DIAPHRAGM AT ABUTMENTS

SCALE: ½" = 1'-0" (TYP. UNLESS NOTED)

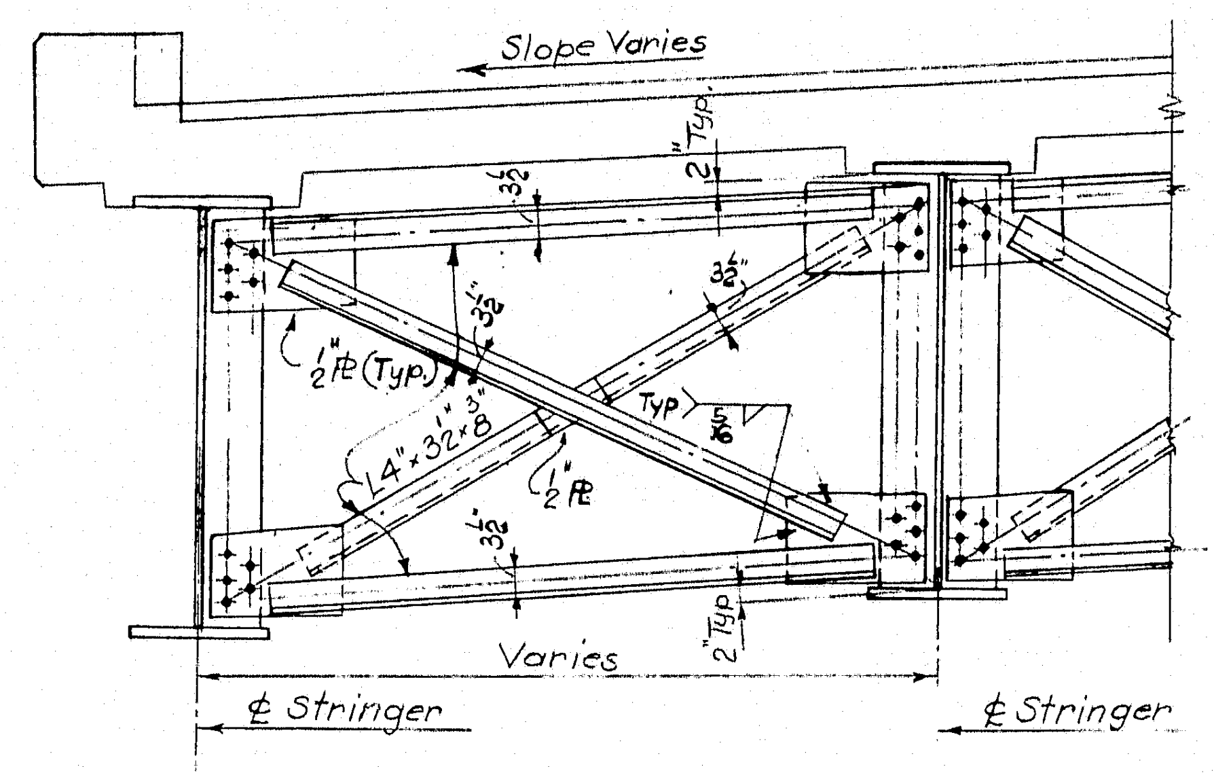
Slope Varies
½"℄(Typ.)
L4×3½×⅜
½℄
Typ.
Varies
℄ Stringer
℄ Stringer

TYPICAL INTERIOR DIAPHRAGM

(On Typical Interior Diaphragms adjacent to expansion joints, field drill bolt holes after alignment of hanger links.)

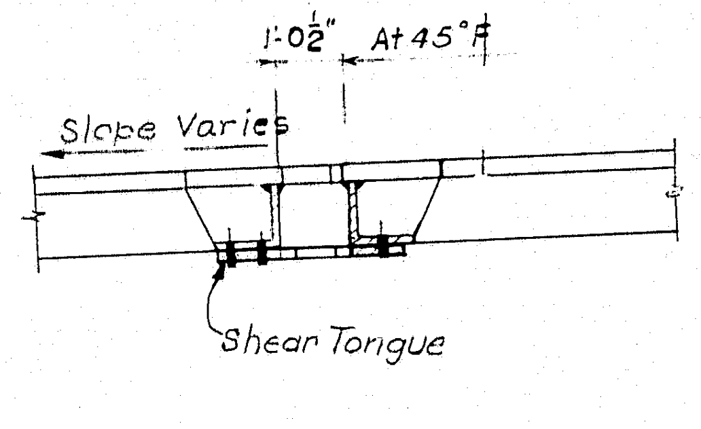
1'-0½"
At 45°F
Slope Varies
Shear Tongue

SECTION L-L

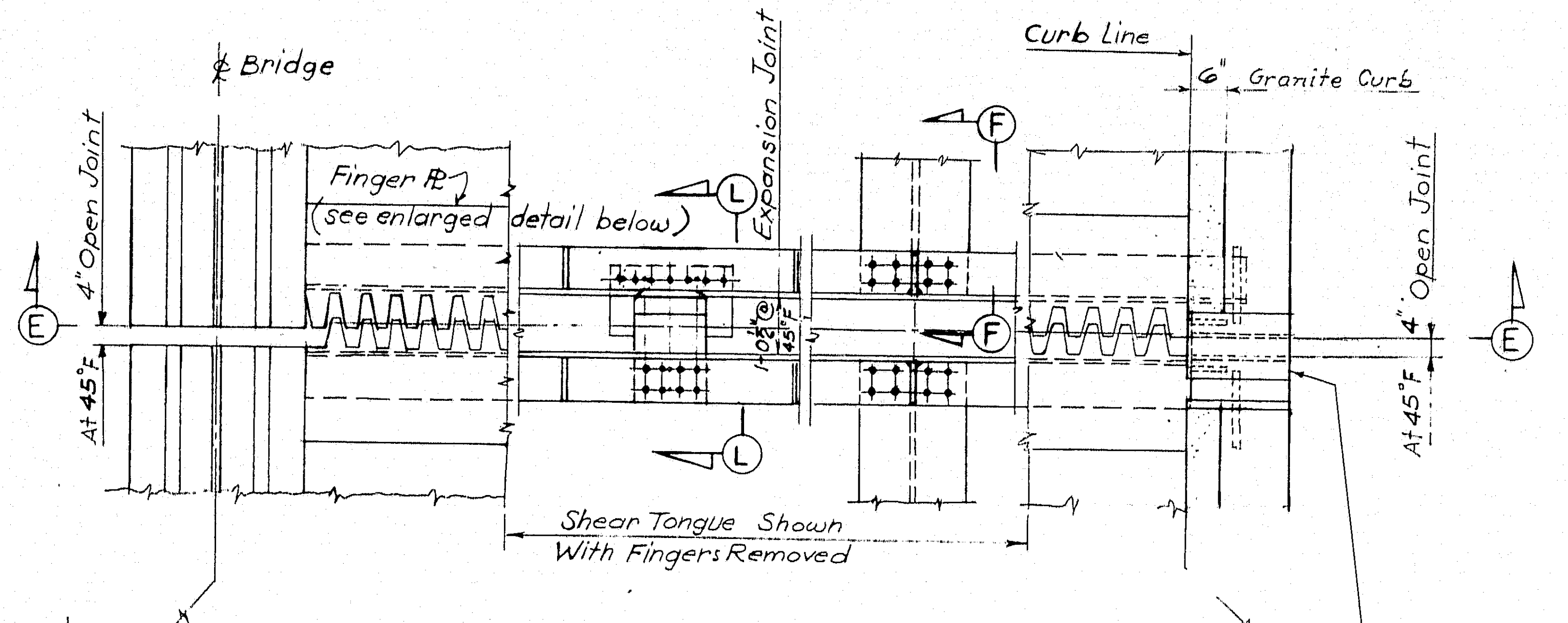
℄ Bridge
Finger ℄ (see enlarged detail below)
Expansion Joint
Curb line
6" Granite Curb
4" Open Joint
At 45°F
4" Open Joint
At 45°F
Shear Tongue Shown With Fingers Removed

TYPICAL PLAN OF EXPANSION JOINT

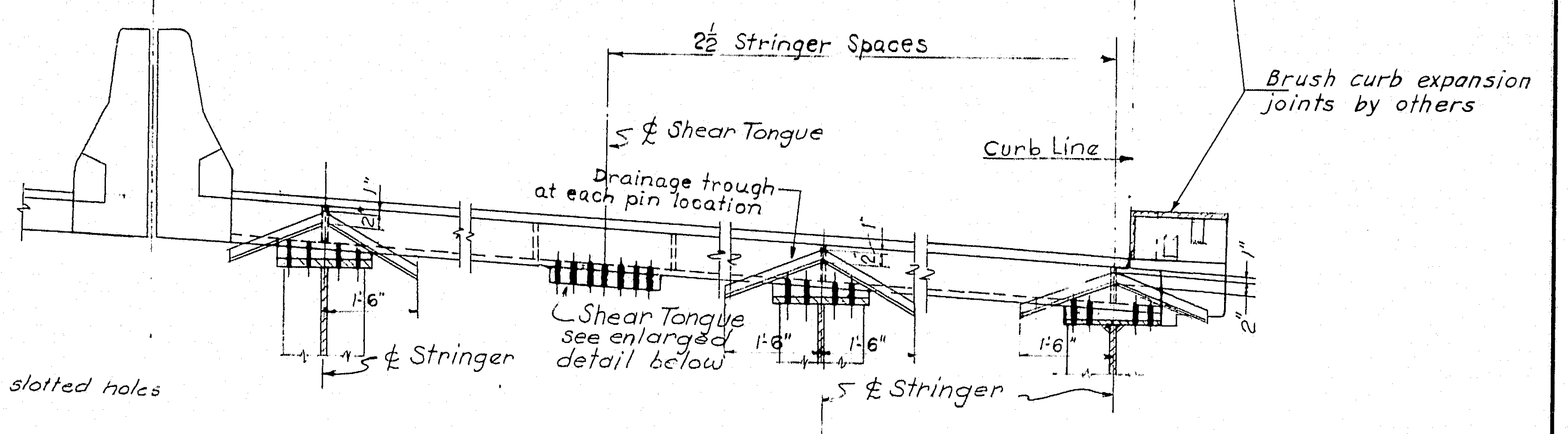
2½ Stringer Spaces
℄ Shear Tongue
Curb Line
Drainage trough at each pin location
Shear Tongue see enlarged detail below
℄ Stringer
℄ Stringer
Brush curb expansion joints by others

SECTION E-E

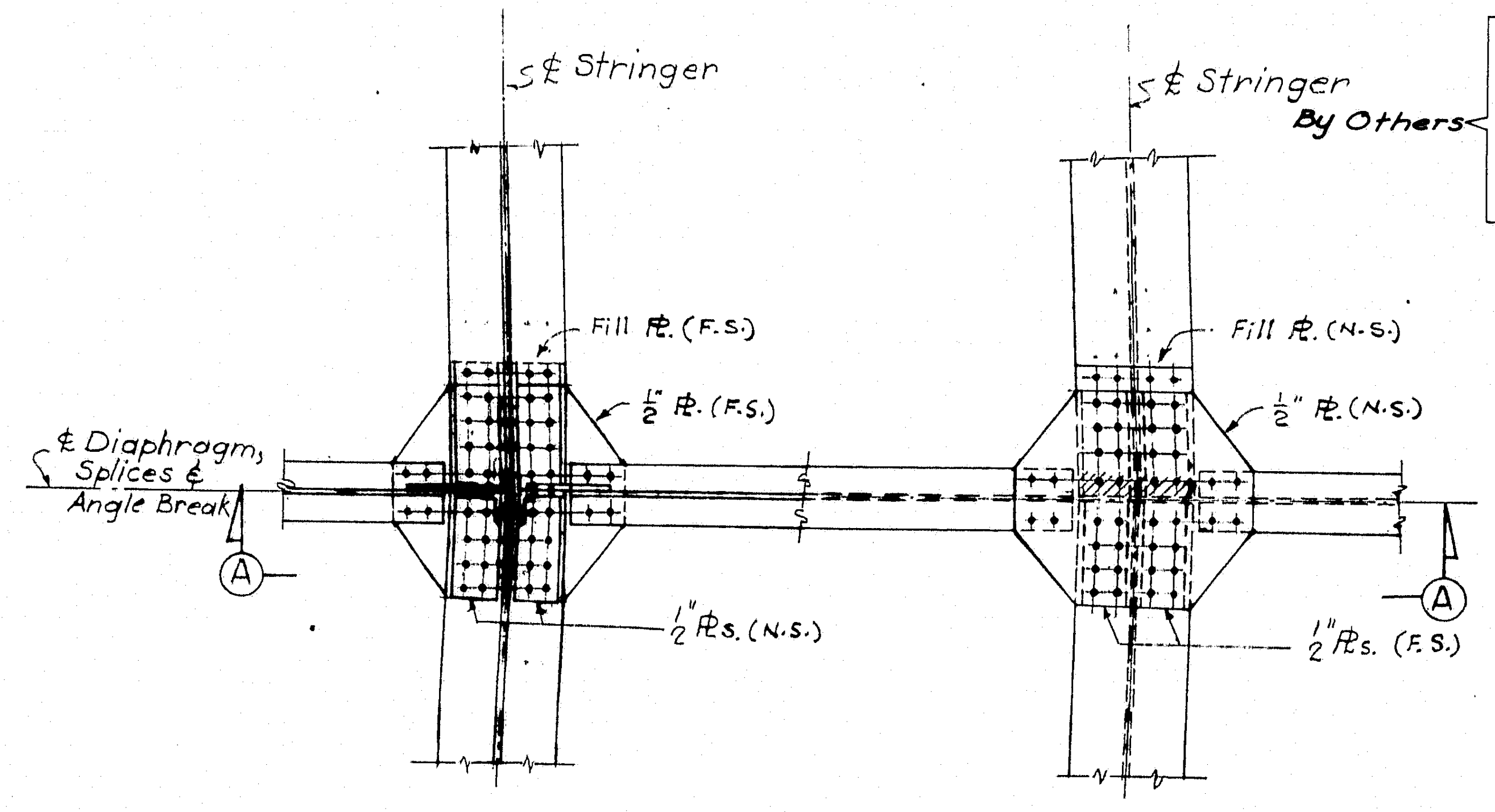
℄ Stringer
℄ Stringer By Others
Fill ℄ (F.S.)
½" ℄ (F.S.)
Fill ℄ (N.S.)
½" ℄ (N.S.)
℄ Diaphragm, Splices ℄ Angle Break
½" ℄s. (N.S.)
½" ℄s. (F.S.)

PLAN SECTION C-C

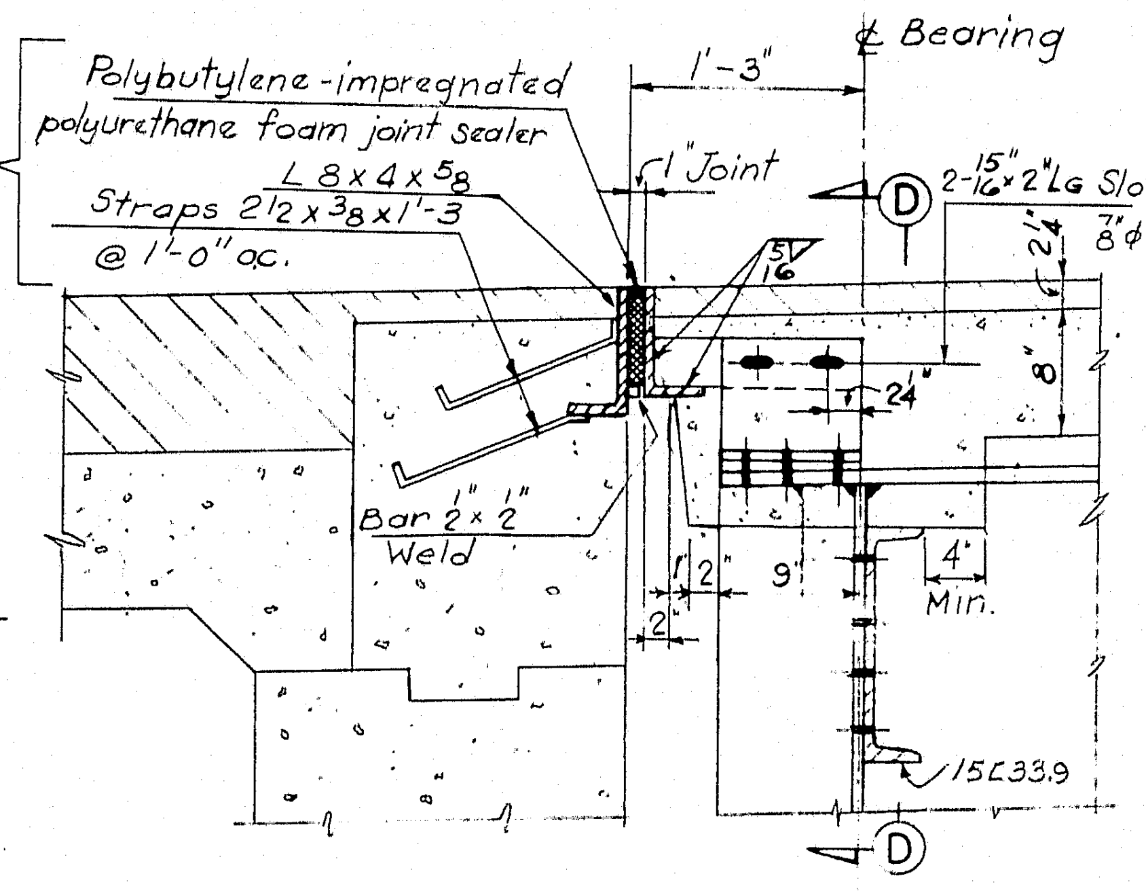
Polybutylene-impregnated polyurethane foam joint sealer
L 8×4×⅝
Straps 2½×⅜×1'-3 @ 1'-0" oc.
1'-3"
℄ Bearing
1" Joint
2-15/16"×2" Lg Slotted holes for ⅞" Bolts
Bar 2×½
Weld
4" Min.
15⊏33.9

JOINT DETAIL AT ABUTMENTS

SCALE: 1" = 1'-0"

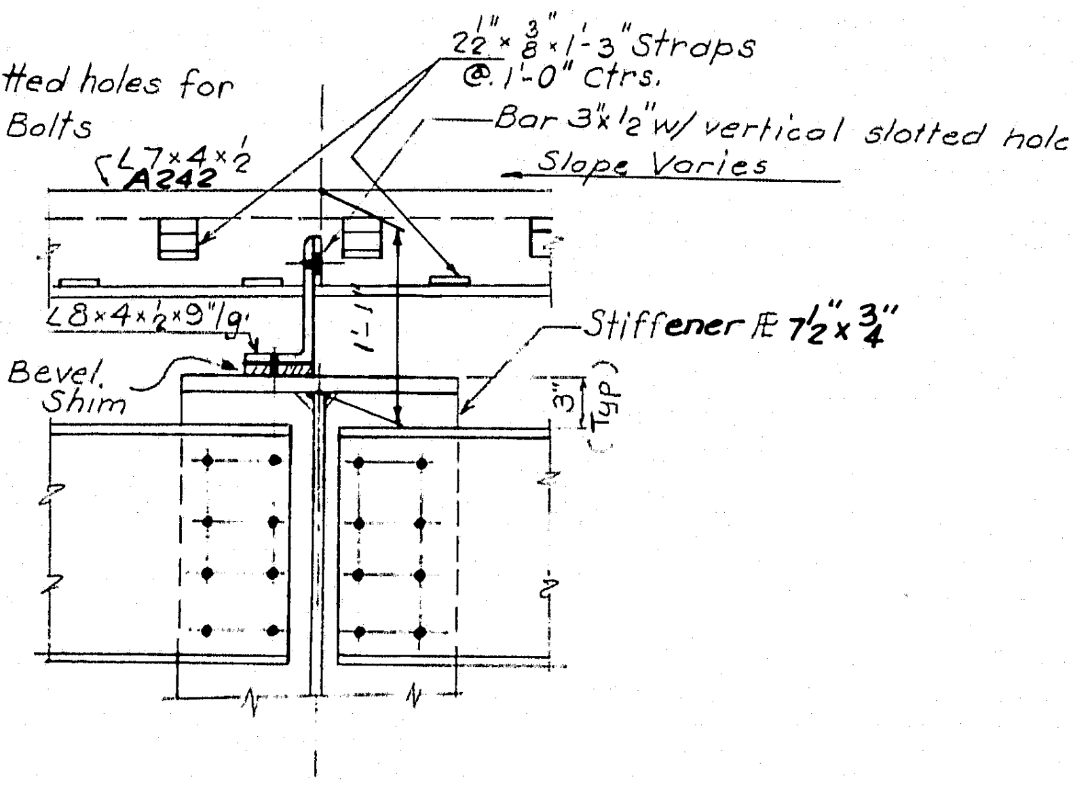
2½×⅜"×1'-3"Straps @ 1'-0" Ctrs.
Bar 3⅜×½ w/ vertical slotted holes
Slope Varies
L7×4×½ A242
L8×4×⅝
Stiffener ℄ 7½"×¾"
Bevel Shim

SECTION D-D

Note: Shear tongues to be centered when hanger links are vertical.

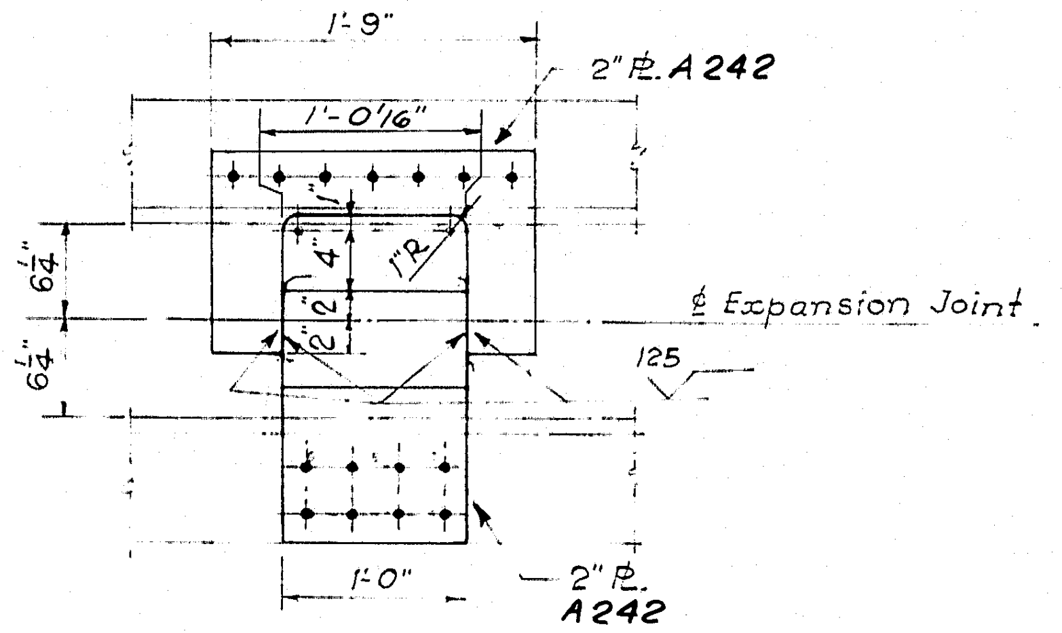
1'-9"
1'-0⅛"
2" ℄ A242
℄ Expansion Joint
2" ℄ A242
1'-0"

SHEAR TONGUE DETAIL

Scale: 1" = 1'-0"

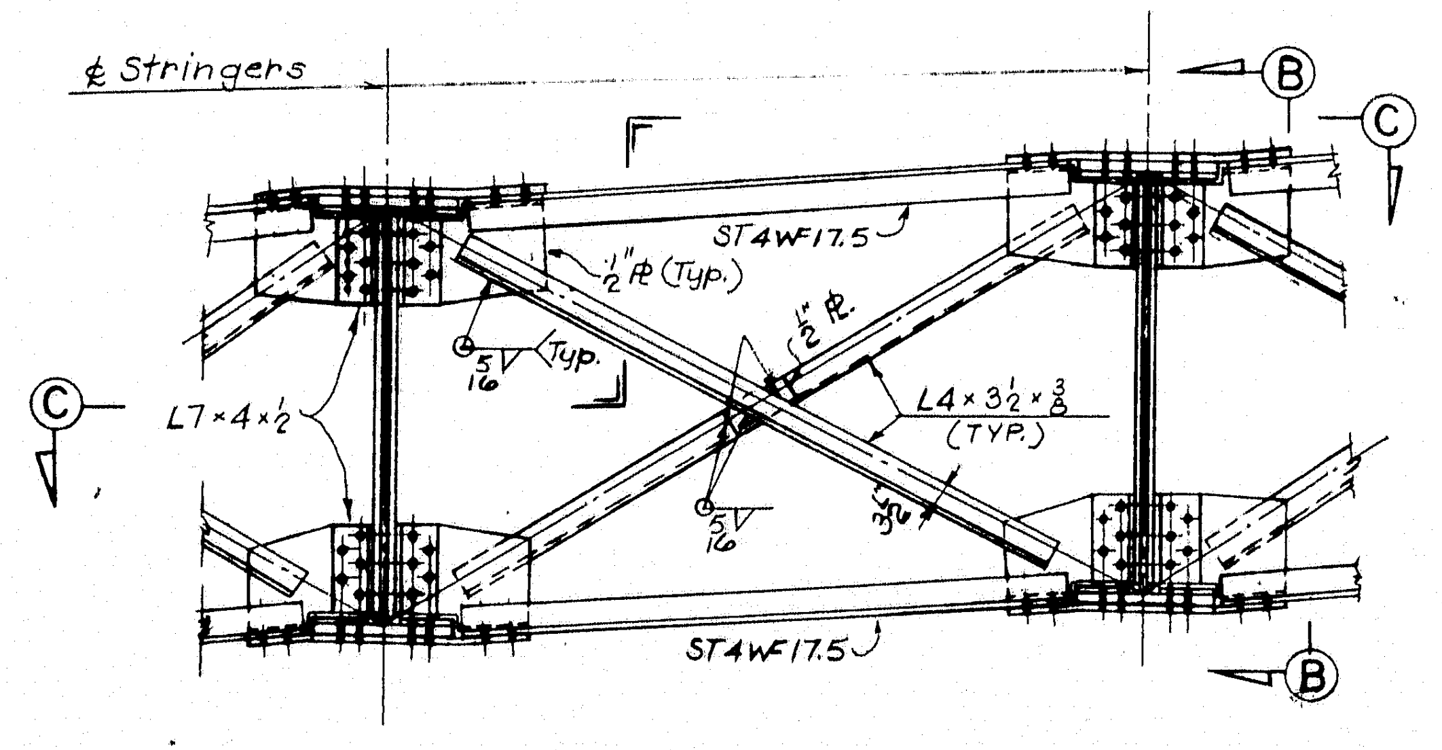
℄ Stringers
ST4WF17.5
½"℄ (Typ.)
L7×4×½
L4×3½×⅜ (TYP.)
ST4WF17.5

SECTION A-A

TYPICAL DIAPHRAGM AT BENT STRINGER SPLICES

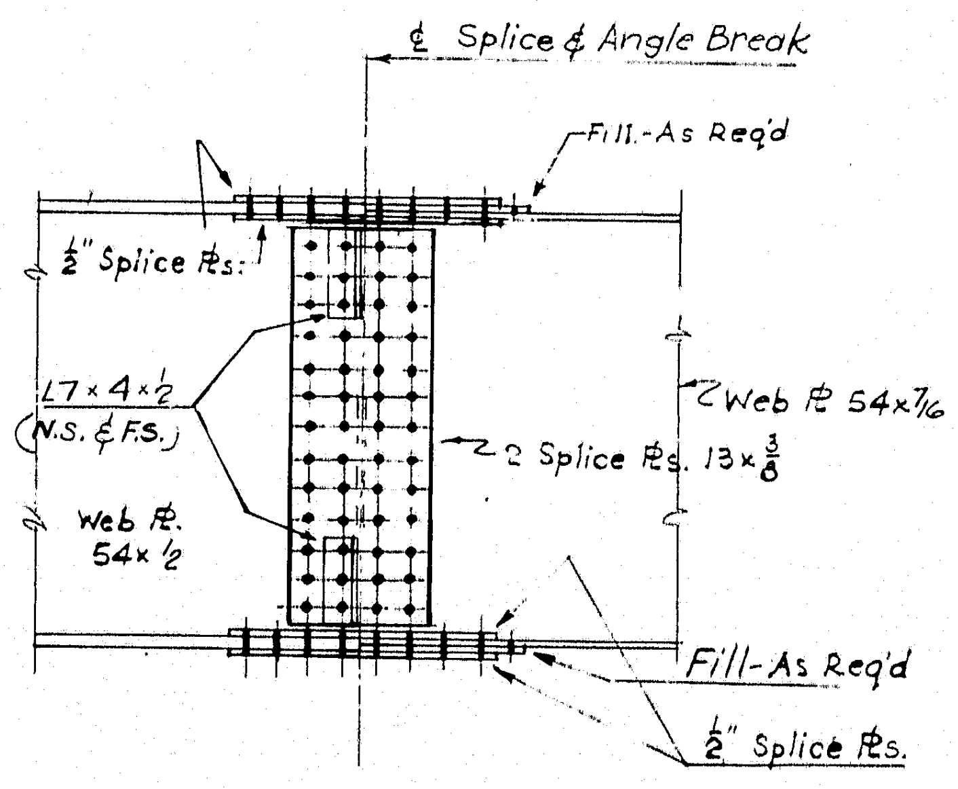
℄ Splice ℄ Angle Break
Fill-As Req'd
½" Splice ℄s.
L7×4×½ (N.S. & F.S.)
Web ℄ 54×½
2 Web ℄ 54×7/16
2 Splice ℄s. 13×⅜
Fill-As Req'd
½" Splice ℄s.

SECTION B-B

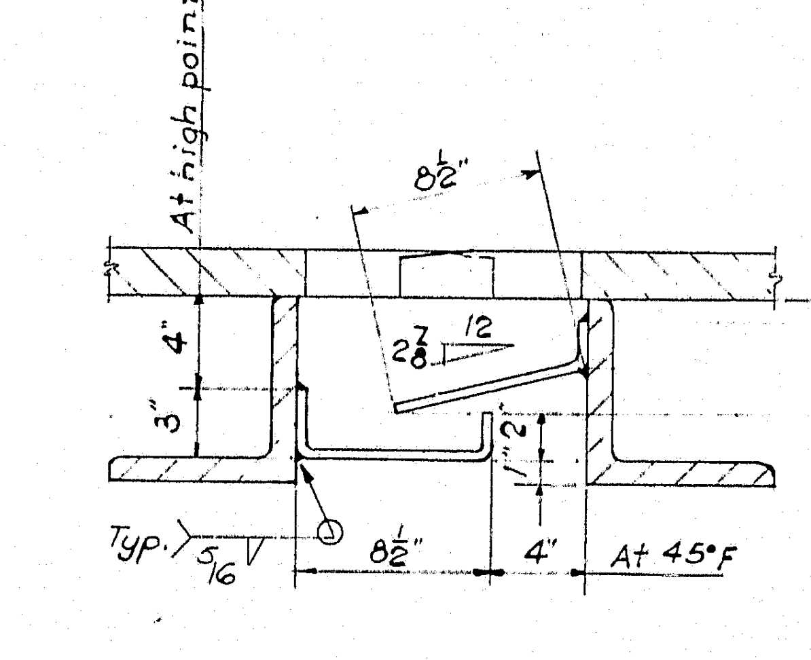
At high point
At high point
8½"
Typ.
8½"
4"
At 45°F

DETAIL OF DRAINAGE TROUGH

Scale: 1½" = 1'-0"

Trough material: ⅜" bent ℄s. - "Corrosion Resisting" ASTM A242 Steel

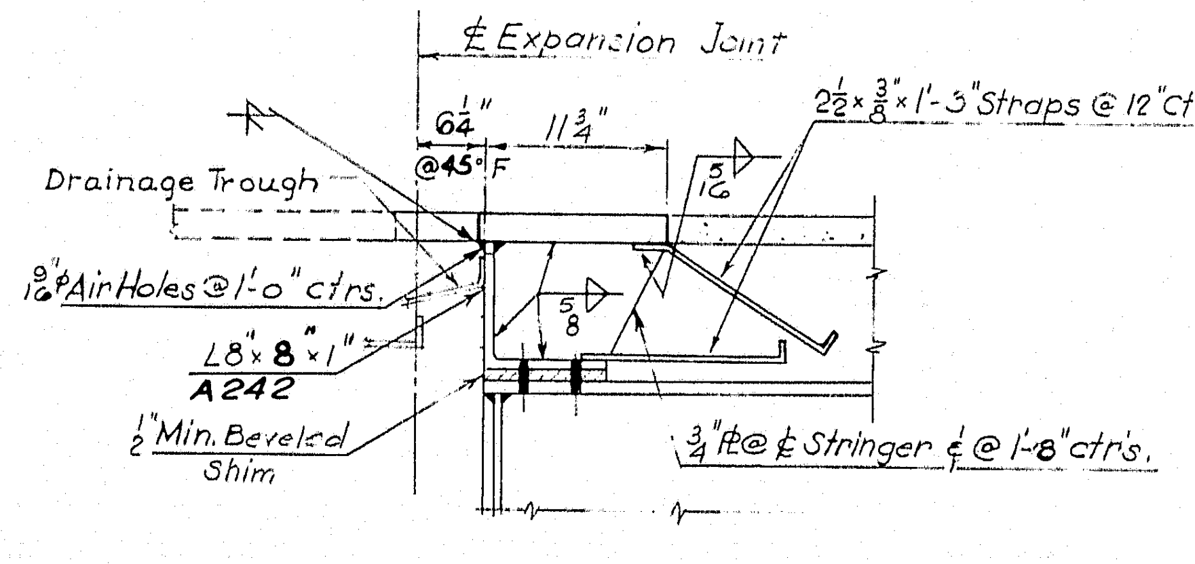
℄ Expansion Joint
6¼" @45°F
11½"
2½×⅜×1'-3"Straps @ 12"Ctrs.
Drainage Trough
⅜"Air Holes @ 1'-0" ctrs.
L8×8×1" A242
1"Min. Beveled Shim
¾"℄ @ ℄ Stringer & @ 1'-8" ctrs.

SECTION F-F

Note: Finger plates to be cut from single plate.

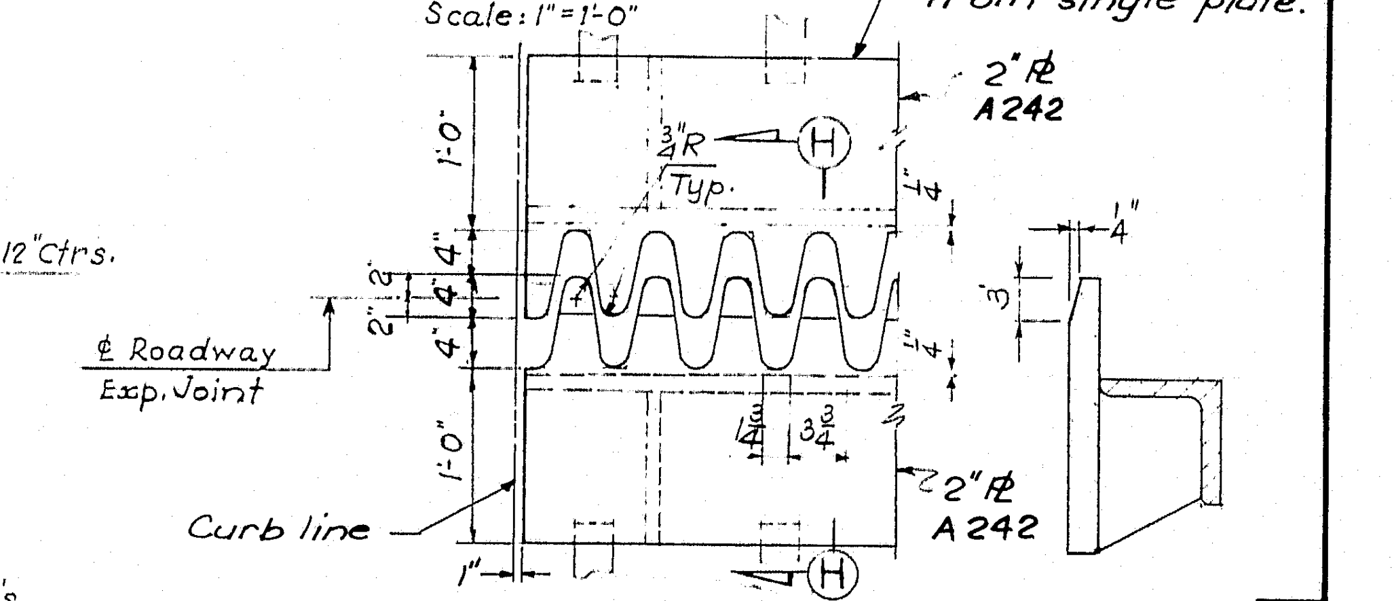
2" ℄ A242
Typ.
℄ Roadway Exp. Joint
1'-0"
1'-0"
Curb line
2" ℄ A242
1"

FINGER JOINT DETAIL SECT. H-H

3

DESIGN - A. Krzywoscha
TRACE - A. J. Mostowicz
CHECK - S. Nishimura

BRIDGE NO. IN CHARGE OF - R. W. Christie

NEW HAMPSHIRE
DEPARTMENT OF PUBLIC WORKS AND HIGHWAYS
AND
MAINE STATE HIGHWAY COMMISSION
INTERSTATE 95 BRIDGE
OVER
PISCATAQUA RIVER
BETWEEN
PORTSMOUTH, NEW HAMPSHIRE AND KITTERY, MAINE

APPROACH SPANS

STEEL DETAILS II

SHEET 21 OF 23

HARDESTY & HANOVER
CONSULTING ENGINEERS
NEW YORK, N.Y.

129-49

B. P. R. REG. NO.	STATE	PROJECT NUMBER	SHEET NO.	TOTAL SHEETS
1	MAINE	I-95-1(22)16	22	23

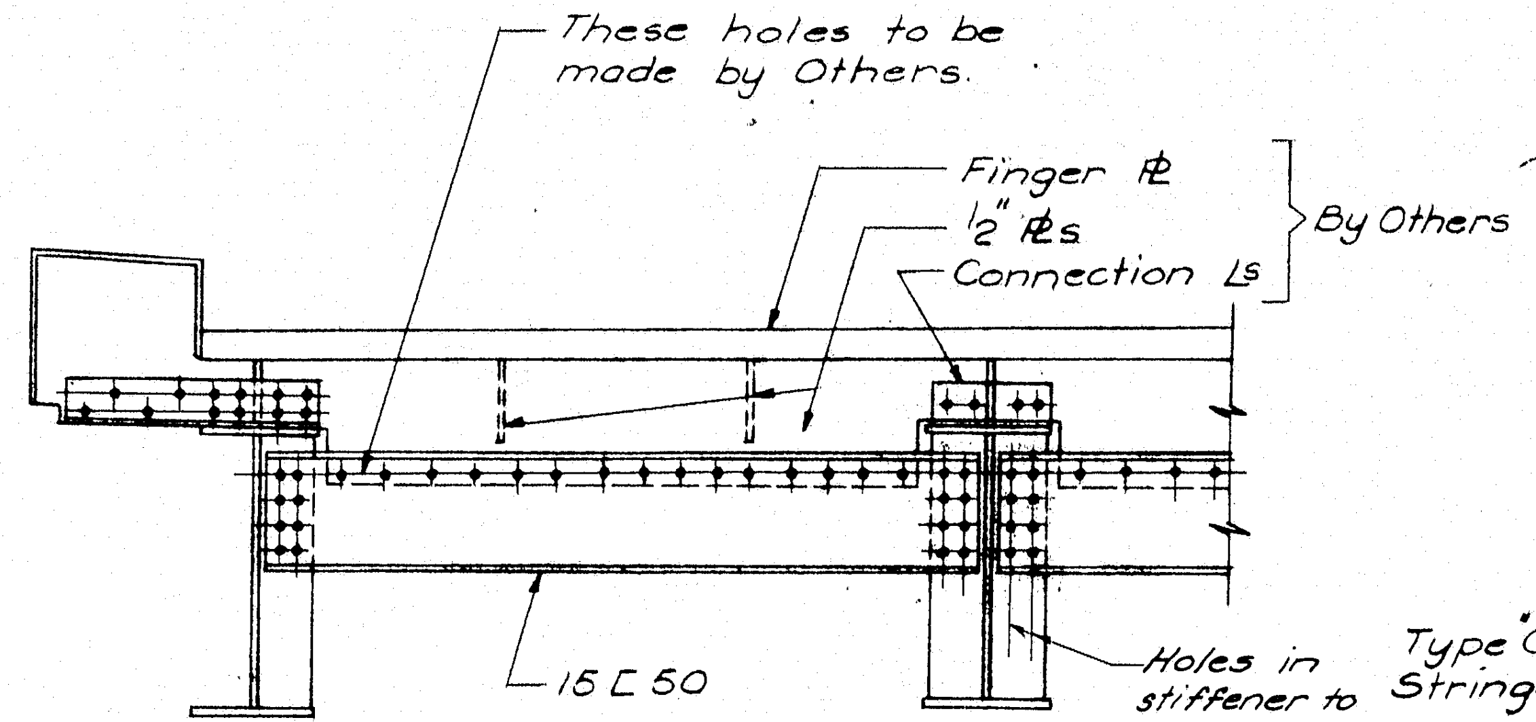

These holes to be made by Others.
Finger ℞
½" ℞s
Connection ∟s
By Others
15 [50
Holes in stiffener to be field drilled by Others. Typical for all 15 [50.

SECTION A-A

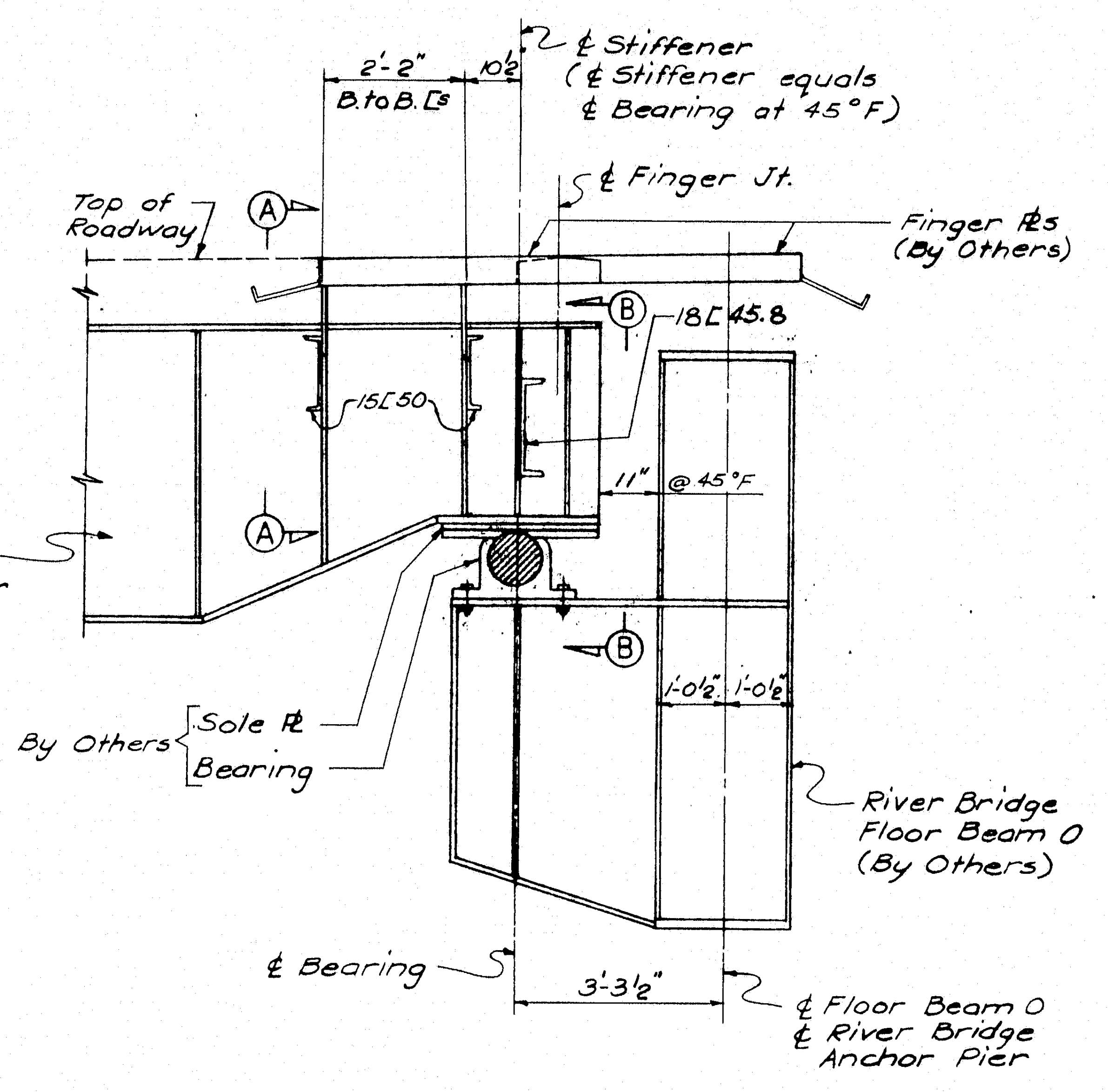

2'-2"
10½"
B. to B. ∟s
℄ Stiffener
(℄ Stiffener equals ℄ Bearing at 45°F)
℄ Finger Jt.
Top of Roadway
A
Finger ℞s (By Others)
B
18 [45.8
15 [50
11" @ 45°F
Type "G" Stringer
A
B
1'-0½"
1'-0½"
By Others
Sole ℞
Bearing
River Bridge Floor Beam 0 (By Others)
℄ Bearing
3'-3½"
℄ Floor Beam 0
℄ River Bridge Anchor Pier

DETAIL AT RIVER BRIDGE

Scale: ½"=1'-0"

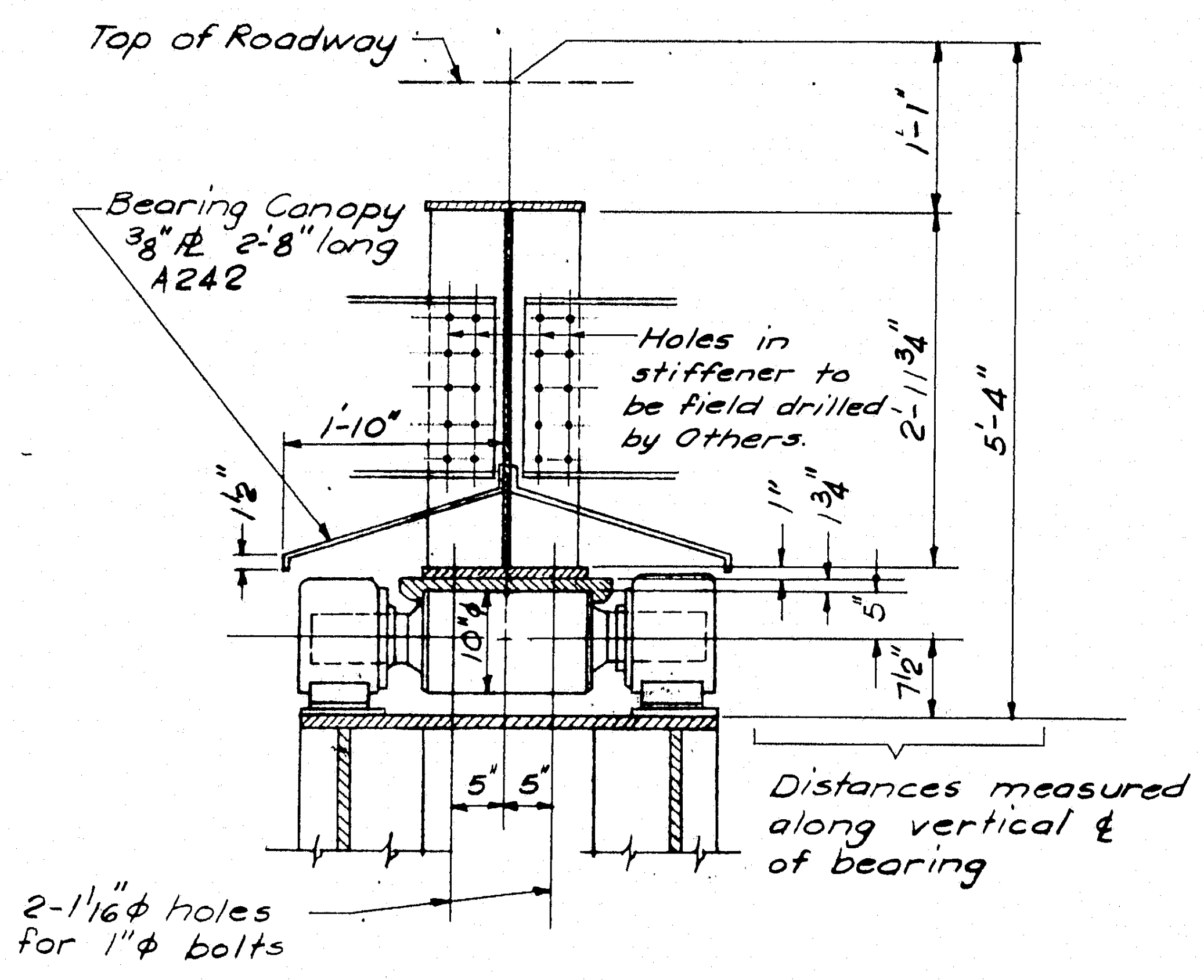

Top of Roadway
1'-1"
Bearing Canopy ⅜" ℞ 2'-8" long A242
Holes in stiffener to be field drilled by Others.
2'-11¾"
5'-4"
1'-10"
1½"
1"
¾"
5"
10⅞"
7½"
5' 5'
Distances measured along vertical ℄ of bearing
2-1 1/16"φ holes for 1"φ bolts

SECTION B-B

Scale: ¾"=1'-0"

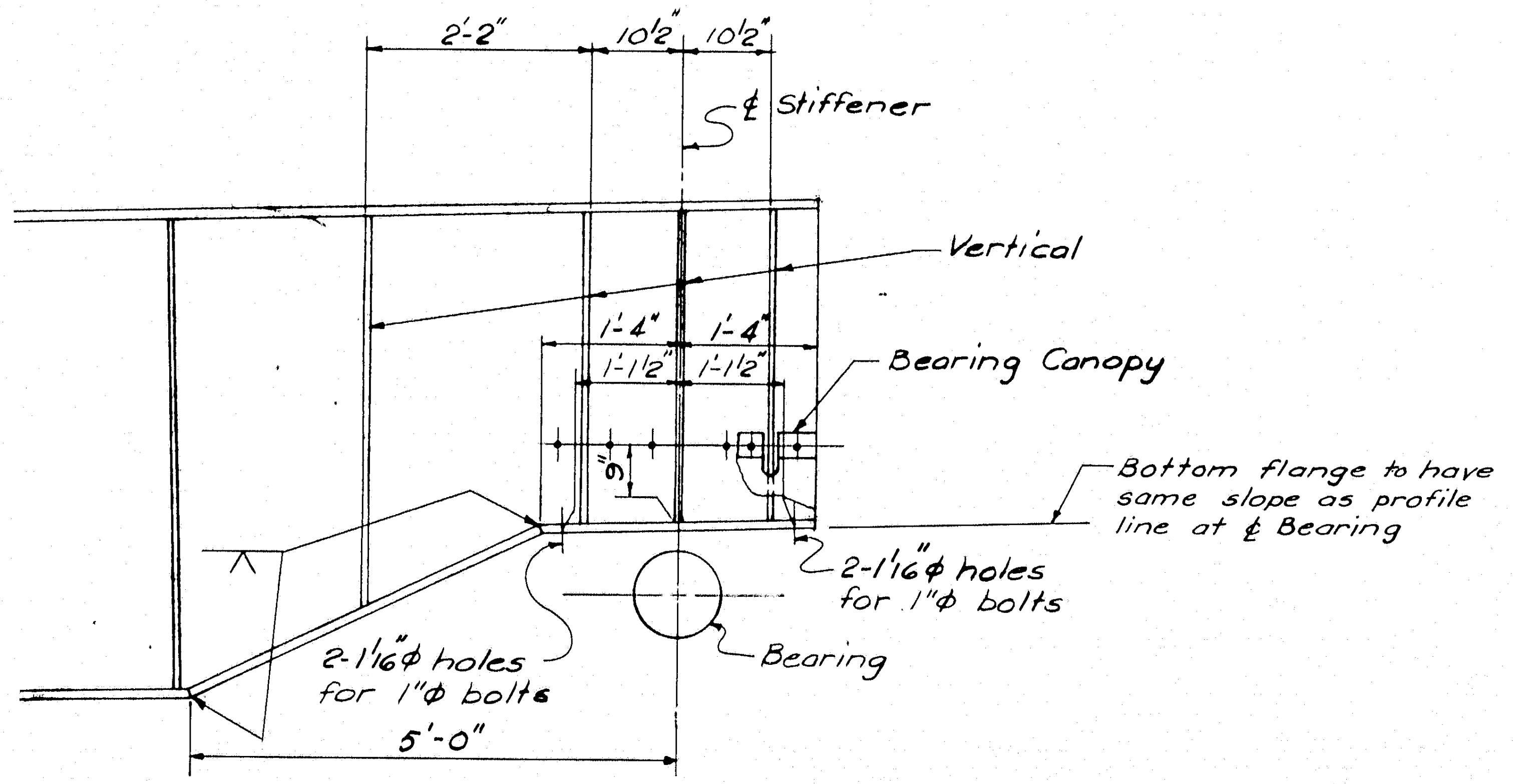

2'-2"
10½"
10½"
℄ Stiffener
Vertical
1'-4"
1'-4"
1'-1½"
1'-1½"
Bearing Canopy
9"
Bottom flange to have same slope as profile line at ℄ Bearing
2-1 1/16"φ holes for 1"φ bolts
Bearing
2-1 1/16"φ holes for 1"φ bolts
5'-0"

TYPE "G" STRINGER

END DETAILS

Scale: ¾"=1'-0"

3

DESIGN – A. Krywoschy
TRACE – A. Klein
CHECK – S. Nishimura

BRIDGE NO.
IN CHARGE OF – R.W. Christi

NEW HAMPSHIRE
DEPARTMENT OF PUBLIC WORKS AND HIGHWAYS
AND
MAINE STATE HIGHWAY COMMISSION
INTERSTATE 95 BRIDGE
OVER
PISCATAQUA RIVER
BETWEEN
PORTSMOUTH, NEW HAMPSHIRE AND KITTERY, MAINE

APPROACH SPANS

STEEL DETAILS III

SHEET 22 OF 23

HARDESTY & HANOVER
CONSULTING ENGINEERS
NEW YORK, N. Y.

129-50.

B. P. R. REG. NO.	STATE	PROJECT NUMBER	SHEET NO.	TOTAL SHEETS
1	MAINE	I-95-1(22) 16	23	23

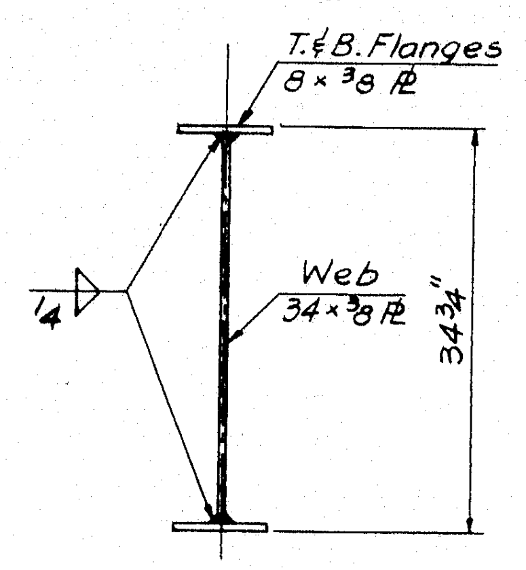

T.& B. Flanges
8 × 3/8 ℙ
Web
34 × 3/8 ℙ
34 3/4"
1/4

SECTION A-A
DIAPHRAGMS & BRACING
(CANTILEVER BRACKET)
Scale: 3/4" = 1'-0"

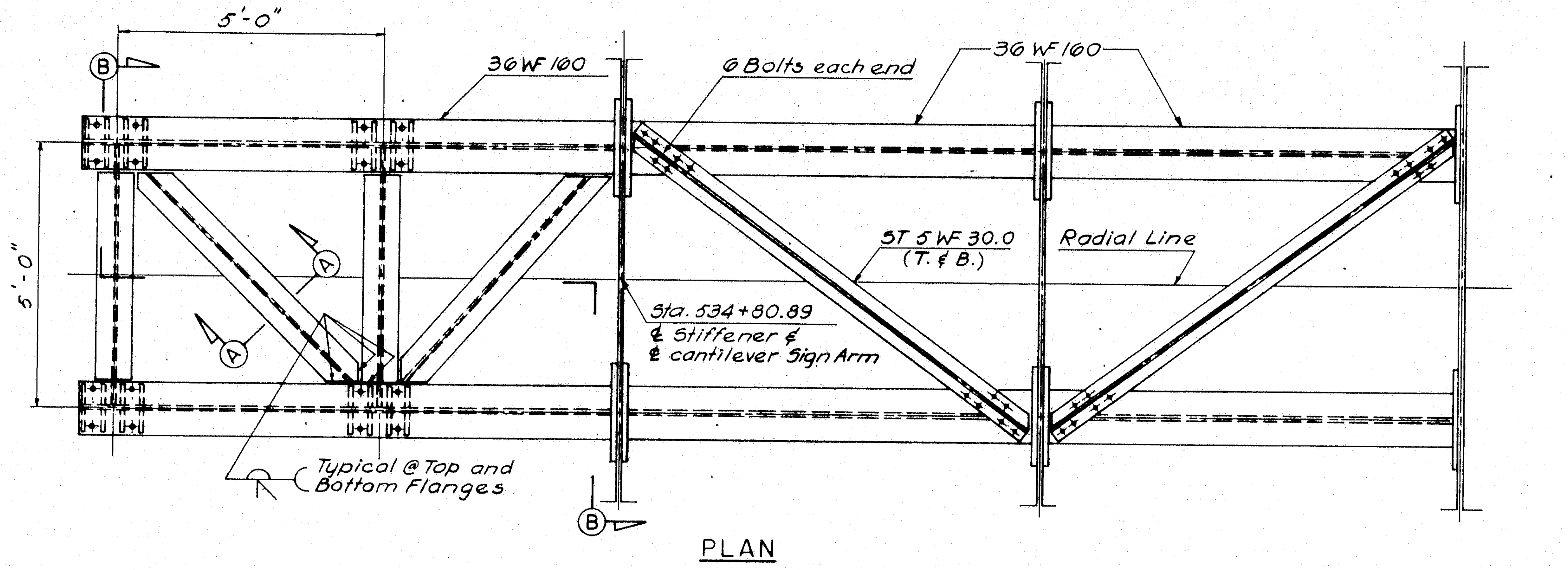

5'-0"
B
36 WF 100
6 Bolts each end
36 WF 160
5'-0"
A
ST 5 WF 30.0
(T. & B.)
Radial Line
Sta. 534+80.89
℄ Stiffener &
℄ cantilever Sign Arm
Typical @ Top and
Bottom Flanges
B

PLAN
Scale: 1/2" = 1'-0"

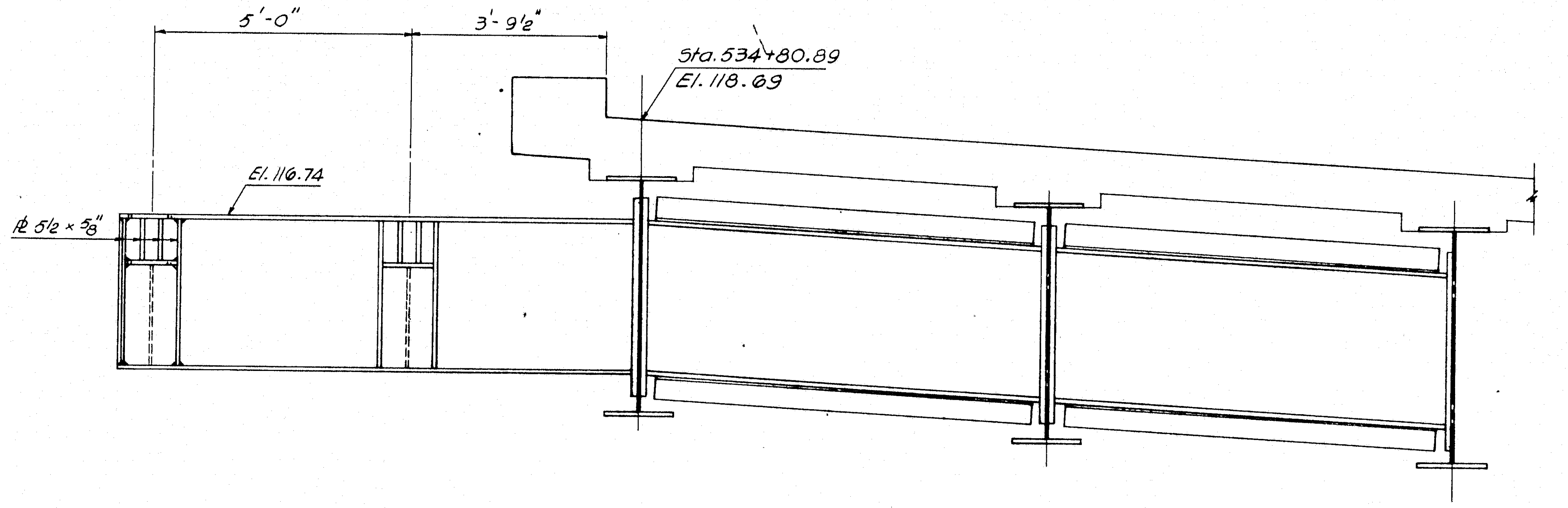

5'-0"
3'-9 1/2"
Sta. 534+80.89
El. 118.09
El. 116.74
ℙ 5 1/2 × 5/8

ELEVATION
Scale: 1/2" = 1'-0"

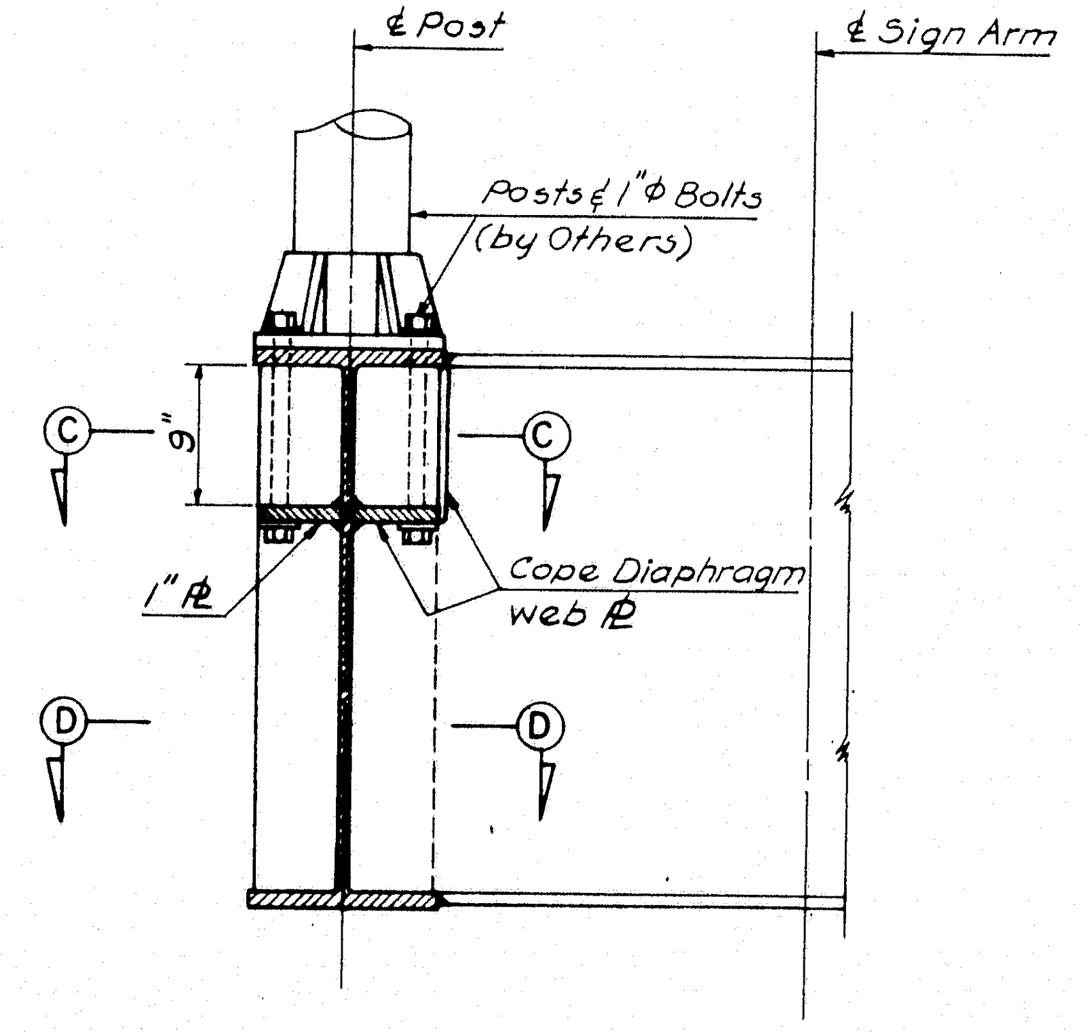

℄ Post
℄ Sign Arm
Posts & 1"Φ Bolts
(by Others)
C
C
9"
1" ℙ
Cope Diaphragm
web ℙ
D
D

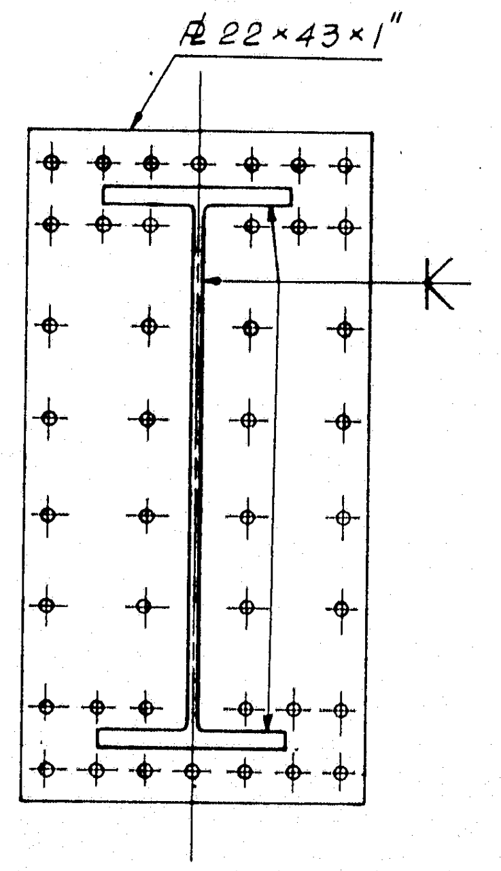

SECTION B-B
Scale: 1" = 1'-0"

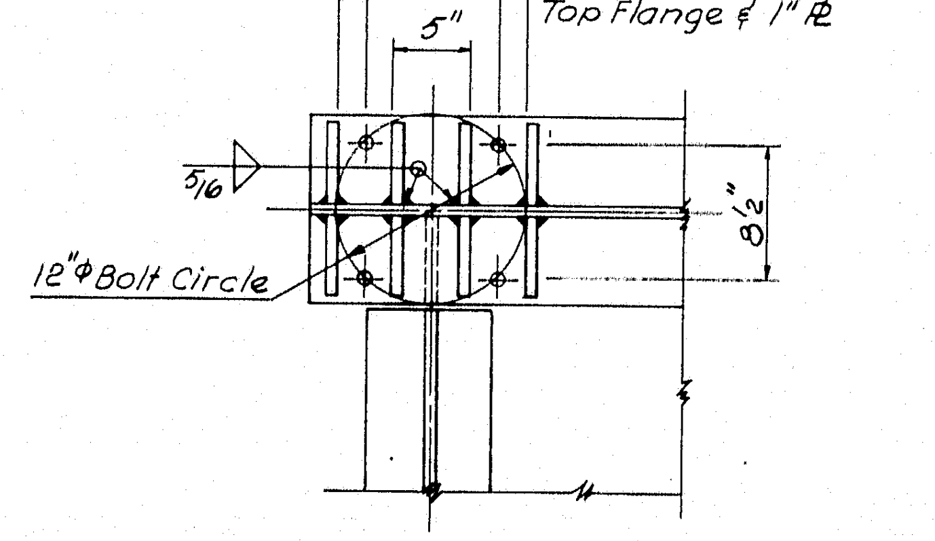

12"
8 1/2"
5"
1 1/16" Φ Holes for 1"Φ Bolts
Top Flange & 1" ℙ
5/16
12"Φ Bolt Circle
8 1/2"

SECTION C-C
Scale: 1" = 1'-0"

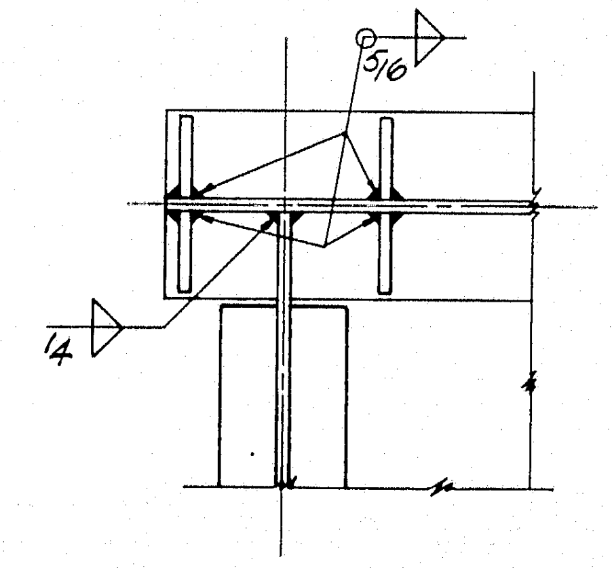

SECTION D-D
Scale: 1" = 1'-0"

NOTES:

Signs and sign arm by Others
All material A36
All bolts 7/8"Φ A325 except where noted

3

DESIGN – T.C. Thompson
TRACE – A.D. Tehenkeli
CHECK – S. Nishimura

BRIDGE NO.
IN CHARGE OF – R.W. Christi

NEW HAMPSHIRE
DEPARTMENT OF PUBLIC WORKS AND HIGHWAYS
AND
MAINE STATE HIGHWAY COMMISSION
INTERSTATE 95 BRIDGE
OVER
PISCATAQUA RIVER
BETWEEN
PORTSMOUTH, NEW HAMPSHIRE AND KITTERY, MAINE

SIGN SUPPORTS

SHEET 23 OF 23

HARDESTY & HANOVER
CONSULTING ENGINEERS
NEW YORK, N. Y.

129-51

B.P.R. REG. NO.	STATE	PROJECT NUMBER	SHEET NO.	TOTAL SHEETS
1	MAINE	I-95-1(22)16	1	44

NEW HAMPSHIRE DEPARTMENT OF PUBLIC WORKS AND HIGHWAYS
MAINE STATE HIGHWAY COMMISSION

PISCATAQUA RIVER BRIDGE
INTERSTATE ROUTE 95
PROJECT NO. I-95-1 (22) 16

PORTSMOUTH, NEW HAMPSHIRE
COUNTY OF ROCKINGHAM

TO

KITTERY, MAINE
COUNTY OF YORK

LENGTH OF PROJECT 0.853 MILES
CONTRACT NO. 4 - APPROACH DECKS

SPECIFICATIONS

1. MAINE STATE HIGHWAY COMMISSION. REVISION OF JUNE, 1968
2. SPECIAL PROVISIONS.
3. SUPPLEMENTAL SPECIFICATIONS.

TRAFFIC

AADT 1990	38,580
DHV	6,560
T	1 %
D	70 %
V	70 MPH

SHEET	TITLE
1	COVER SHEET
2	QUANTITY SUMMARY
3	GENERAL NOTES
4	PROJECT PLAN AND ELEVATION
5-7	GENERAL PLAN AND ELEVATION
8	TYPICAL SECTIONS
9	DECK GEOMETRY
10-20	DECK SLAB LAYOUTS
21-31	DECK FRAMING PLANS
32-33	STEEL AND CONCRETE DETAILS
34	SCUPPERS
35	ABUTMENT BACKWALLS
36-37	APPROACH SLABS
38	PYLON DETAILS
39	ABUTMENT LAYOUT DETAILS
40	RAILING DETAILS
41-42	ELECTRICAL WORK
43-44	BAR LISTS
44 A	STANDARD DETAILS (BD III-69) TRAFFIC CONTROL DEVICES

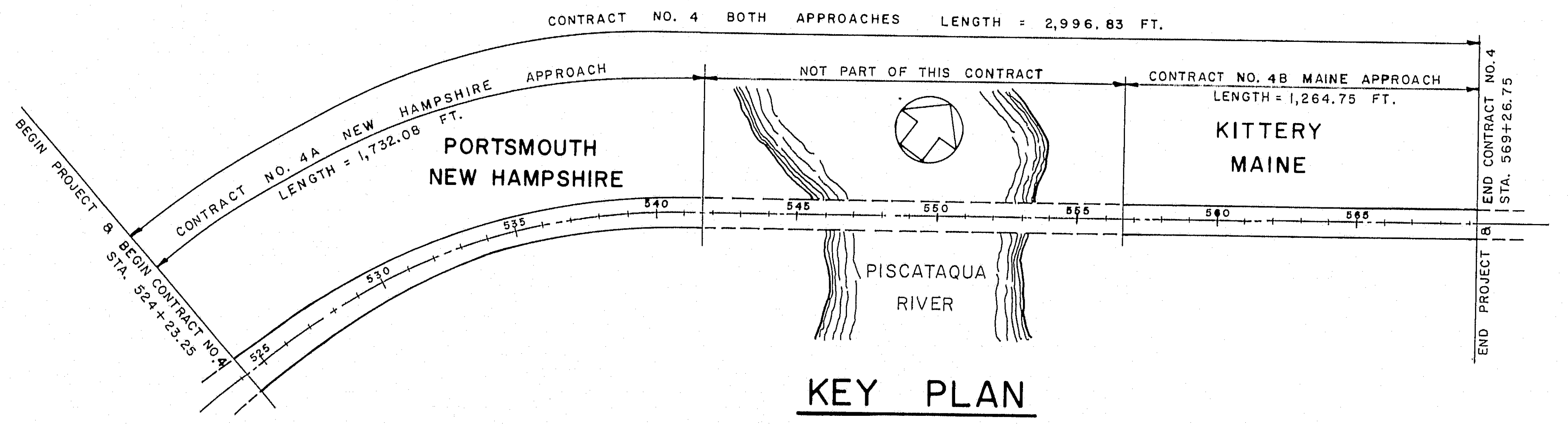
CONTRACT NO. 4 BOTH APPROACHES LENGTH = 2,996.83 FT.
CONTRACT NO. 4A NEW HAMPSHIRE APPROACH
LENGTH = 1,732.08 FT.
NOT PART OF THIS CONTRACT
CONTRACT NO. 4B MAINE APPROACH
LENGTH = 1,264.75 FT.
PORTSMOUTH
NEW HAMPSHIRE
KITTERY
MAINE
PISCATAQUA
RIVER
BEGIN PROJECT & BEGIN CONTRACT NO. 4
STA. 524+23.25
END CONTRACT NO. 4
STA. 569+26.75
END PROJECT
525
530
535
540
545
550
555
560
565

KEY PLAN

SCALE: 1" = 400'

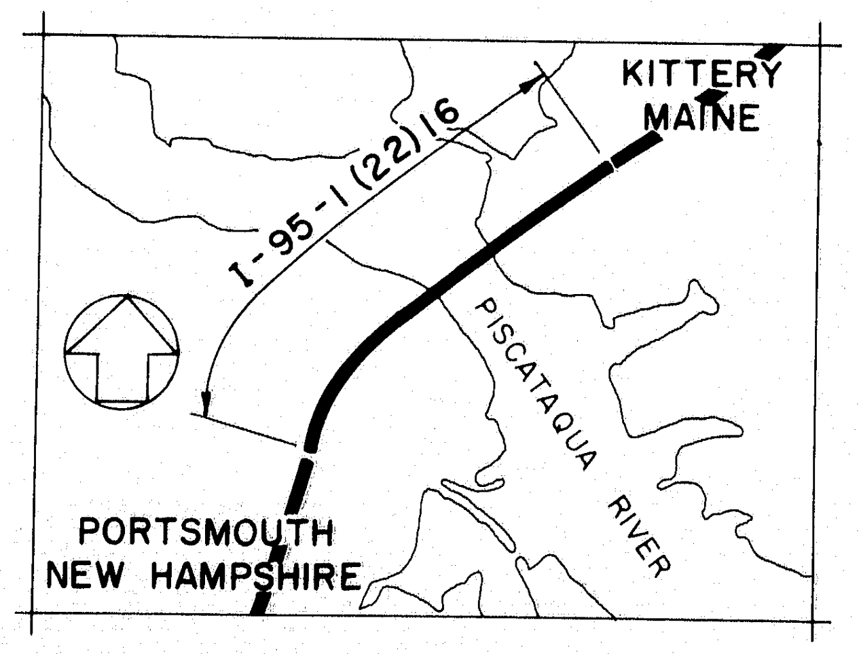
KITTERY
MAINE
I-95-1(22)16
PISCATAQUA RIVER
PORTSMOUTH
NEW HAMPSHIRE

LOCATION MAP

SCALE: 1" = 2000'

APPROVED
NEW HAMPSHIRE DEPARTMENT OF
PUBLIC WORKS AND HIGHWAYS

RW Whitaker
COMMISSIONER

Reuel W Webb
CHIEF ENGINEER

10-14-69
DATE

APPROVED
MAINE STATE HIGHWAY COMMISSION

David H Stevens
CHAIRMAN

Bertrand G. Lachance

Sylvester L. Poor
CHIEF ENGINEER

October 16, 1969
DATE

PREPARED BY

HARDESTY & HANOVER
CONSULTING ENGINEERS
NEW YORK, NEW YORK

John J Fiala

OCTOBER 7, 1969
DATE

DEPARTMENT OF TRANSPORTATION
FEDERAL HIGHWAY ADMINISTRATION
BUREAU OF PUBLIC ROADS
REGION 1

APPROVED

DIVISION ENGINEER

DATE

129-52

B. P. R. REG. NO.	STATE	PROJECT NUMBER	SHEET NO.	TOTAL SHEETS
1	MAINE	I-95-1(22)16	2	44

ITEM NO.	DESCRIPTION	UNIT	NEW HAMPSHIRE APPROACH		MAINE APPROACH		TOTAL	
			ESTIMATED	AS BUILT	ESTIMATED	AS BUILT	ESTIMATED	AS BUILT
203.24	COMMON BORROW	C.Y.	2,190	2,636	1,567	2,108	3,757	4,744
304.10	AGGREGATE SUBBASE COURSE-GRAVEL	C.Y.	113	110	80	79	193	189
502.21	STRUCTURAL CONCRETE, ABUTMENTS & RETAINING WALLS	C.Y.	65	66.1	46	47.9	111	114
502.261 502.262	STRUCTURAL CONCRETE, ROADWAY SLAB, BRUSH CURBS & MEDIAN BARRIER ON STEEL BRIDGES	L.S.	1	1	1	1	1 1	1 1
502.311 502.312	STRUCTURAL CONCRETE, APPROACH SLAB & MEDIAN BARRIER ON APPROACH SLAB	L.S.	1	1	1	1	1 1	1 1
502.34	SET RETARDER	C.Y. CONC.	6,137	5,303	4,108	3,437	10,245	8,740
503.121	REINFORCING STEEL, FABRICATED & DELIVERED	LBS.	1,834,400	1,936,316	1,255,100	1,270,877	3,089,500	3,207,193
503.131	REINFORCING STEEL, PLACING	LBS.	1,834,400	1,935,050	1,255,100	1,267,997	3,089,500	3,203,047
507.081	BRIDGE RAILING	L.F.	3,492	3,494.5	2,558	2,520.5	6,050	6,015
512,06	FRENCH DRAINS	C.Y.	82	87	58	63	140	150
513.081	SLOPE PROTECTION	S.Y.	920	836	1,781	1,237	2,701	2,073
515.06	EPOXY RESIN SURFACE SEALANT	S.Y.	115	97.6	83	94.8	198	192.4
516.06	WATER REPELLANT	GAL.	46	124	34	118	80	242
603.152	12 INCH CULVERT PIPE	L.F.	175	127.3	300	282	475	409.3
603.58	12 INCH METAL PIPE END SECTIONS	EACH	3	3	3	3	6	6
603.84	6 INCH WROUGHT IRON PIPE	L.F.			50	40	50	40
603.85	8 INCH WROUGHT IRON PIPE	L.F.			10	4.6	10	4.6
607.15	DRIVE GATEWAYS-16 FEET-METAL	EACH			2	—	2	—
607.17	CHAIN LINK FENCE-6 FEET	L.F.			1,430	610	1,430	610
607.36	BRACING ASSEMBLY, TYPE I-CHAIN LINK FENCE - 6 FEET	EACH			8	4	8	4
607.37	BRACING ASSEMBLY, TYPE II-CHAIN LINK FENCE - 6 FEET	EACH			7	2	7	2
609.131	VERTICAL BRIDGE CURB, TYPE 1	L.F.	3,506	3,496.4	2,572	2,564.5	6,078	6,060.9
609.132	VERTICAL BRIDGE CURB, SPECIAL	L.F.	3,506	3,505.7	2,572	2,572.4	6,078	6,078.1
615.07	LOAM	C.Y.	80	74	266	416	346	490
618.14	SEEDING, METHOD NUMBER 2	UNIT	7	6.1	24	33.7	31	39.8
619.08	HAY MULCH	TON	0.1	0.2	0.3	0.9	0.4	1.1
639.07	TESTING FACILITIES, CONCRETE	L.S.			1	2	1	2
655.101 655.103	ELECTRICAL WORK	L.S.	1	1	1	1	1 1	1 1

STRUCTURAL CONCRETE, ROADWAY SLAB, BRUSH CURBS, & MEDIAN BARRIER

	UNIT	ITEM 502.261 NEW HAMPSHIRE APPROACH	ITEM 502.262 MAINE APPROACH
ROADWAY SLAB	C.Y.	5,635	3,734
BRUSH CURBS	C.Y.	155	113
MEDIAN BARRIER	C.Y.	268	195
SCUPPERS	LB.	10,600	18,600
8" W.I. PIPE	L.F.	185	90
6" W.I. PIPE	L.F.	-	330
BRUSH CURB EXPANSION JOINTS	LB.	1,470	1,100

STRUCTURAL CONCRETE, APPROACH SLAB & MEDIAN BARRIER ON APPROACH SLAB

	UNIT	ITEM 502.311 NEW HAMPSHIRE APPROACH	ITEM 502.312 MAINE APPROACH
APPROACH SLAB	C.Y.	76	63
MEDIAN BARRIER ON APPROACH SLAB	C.Y.	3	3

AS BUILT

R.W. Christie 2/5/73

4

DESIGN — S. Nishimura
TRACE —
CHECK —

BRIDGE NO.
IN CHARGE OF — Richard W. Christie

NEW HAMPSHIRE
DEPARTMENT OF PUBLIC WORKS AND HIGHWAYS
AND
MAINE STATE HIGHWAY COMMISSION
INTERSTATE 95 BRIDGE
OVER
PISCATAQUA RIVER
BETWEEN
PORTSMOUTH, NEW HAMPSHIRE AND KITTERY, MAINE

HARDESTY & HANOVER
CONSULTING ENGINEERS
NEW YORK, N. Y.

QUANTITY SUMMARY

SHEET 2 OF 44

129-53

B. P. R. REG. NO.	STATE	PROJECT NUMBER	SHEET NO.	TOTAL SHEETS
1	MAINE	I-95-1(22)16	3	44

SPECIFICATIONS

THE FOLLOWING SPECIFICATIONS GOVERN THE DESIGN AND CONSTRUCTION OF THIS PROJECT:

DESIGN
  AMERICAN ASSOCIATION OF STATE HIGHWAY OFFICIALS, NINTH EDITION, 1965
  STANDARD SPECIFICATIONS FOR HIGHWAY BRIDGES

  AMERICAN WELDING SOCIETY
  SPECIFICATIONS FOR WELDED HIGHWAY AND RAILWAY BRIDGES
    AWS D2.0-66 AND SUPPLEMENTS

CONSTRUCTION
  STATE OF MAINE, STATE HIGHWAY COMMISSION
    STANDARD SPECIFICATIONS - HIGHWAYS AND BRIDGES
      REVISION OF JUNE 1968
    SUPPLEMENTAL SPECIFICATIONS
    SPECIAL PROVISIONS FOR THE PROJECT

DESIGN CRITERIA

DESIGN SPEED = 70 MPH
MINIMUM STOPPING SIGHT DISTANCE = 600 FEET
VERTICAL NAVIGATION CLEARANCE ABOVE MEAN HIGH WATER 135'0"
LIVE LOAD

CASE I	AASHO HS-20-44 WITH ALLOWABLE UNIT STRESSES DETERMINED BY THE CRITERIA FOR FATIGUE
CASE II	AASHO HS20-44 INCREASED BY 100% WITH ALLOWABLE UNIT STRESSES OF 150% OF BASIC STRESSES
CASE III	MILITARY TANDEM AXLE LOAD OF TWO 24,000 POUND AXLES SPACED 4'-0" APART WITH ALLOWABLE UNIT STRESSES EQUAL TO BASIC STRESSES

WIND LOAD
  GIRDER SPANS 50 POUNDS PER SQUARE FOOT ON THE PROJECTED AREA OF THE SUPERSTRUCTURE

DIMENSIONS

ALL DIMENSIONS SHOWN IN PLAN VIEWS ARE HORIZONTAL AND AT A TEMPERATURE OF 45°F.

DESIGN STRESSES

CONCRETE	F_c = 1,200 PSI
REINFORCING STEEL	F_s = 20,000 PSI

CONCRETE

STRUCTURAL CONCRETE FOR THE VARIOUS PARTS OF THE WORK SHALL BE AS FOLLOWS:

USE	CLASS	CEMENT CONTENT SACKS/CU. YD.	AGGREGATE
DECK SLABS	AA	7.00	CRUSHED STONE
ABUTMENTS	A	6.50	CRUSHED STONE
APPROACH SLABS	A	6.50	CRUSHED STONE

ALL CONCRETE SHALL BE AIR-ENTRAINED AND HAVE AN EXPECTED 28 DAY COMPRESSIVE STRENGTH OF 3500 PSI.

REINFORCING STEEL

REINFORCING STEEL SHALL CONFORM TO THE FOLLOWING SPECIFICATIONS:

BAR SIZE 2-11	AASHO M31 INTERMEDIATE GRADE OR ASTM A615 GRADE 60

BAR LISTS ARE SET UP SO THAT EACH STRUCTURE IN THE CONTRACT HAS ITS OWN COMBINATION OF LETTERS AND NUMBERS.

BAR SIZES ARE IDENTIFIED BY THE FIRST TWO DIGITS OF A FOUR DIGIT BAR MARK OR THE FIRST DIGIT OF A THREE DIGIT BAR MARK.

THE LAST TWO DIGITS IN CONJUNCTION WITH THE LETTER PREFIX INDICATES THE BAR NUMBER WITHIN A GIVEN BAR SIZE GROUP AND THE STRUCTURE IN WHICH IT BELONGS. NEW HAMPSHIRE STRUCTURES HAVE BAR NUMBERS FROM 00 TO 49 AND MAINE STRUCTURES HAVE BAR NUMBERS FROM 50-99. LETTER PREFIXES DESIGNATE THE EXACT STRUCTURE IN WHICH THE BAR BELONGS.

ALL DIMENSIONS IN THE BAR LISTS ARE OUT TO OUT DIMENSIONS.

REINFORCING STEEL SPLICES

REINFORCING BARS SHALL BE SPLICED BY LAPPING AT LEAST 30 DIAMETERS.

REINFORCING BAR SPLICES IN ADDITION TO THOSE SHOWN ON THE PLANS MAY BE USED IF APPROVED BY THE ENGINEER.

REINFORCING BAR SPLICES SHOWN ON THE PLANS MAY BE OMITTED AND LONGER BARS USED IF APPROVED BY THE ENGINEER.

4

DESIGN —
TRACE — M. Droste
CHECK — S. Nishimura

BRIDGE NO.
IN CHARGE OF — R. W. Christie

NEW HAMPSHIRE
DEPARTMENT OF PUBLIC WORKS AND HIGHWAYS
AND
MAINE STATE HIGHWAY COMMISSION
INTERSTATE 95 BRIDGE
OVER
PISCATAQUA RIVER
BETWEEN
PORTSMOUTH, NEW HAMPSHIRE AND KITTERY, MAINE

HARDESTY & HANOVER
CONSULTING ENGINEERS
NEW YORK, N. Y.

GENERAL NOTES

SHEET 3 OF 44

129-54

B. P. R. REG. NO.	STATE	PROJECT NUMBER	SHEET NO.	TOTAL SHEETS
1	MAINE	I-95-1(22)16	4	44

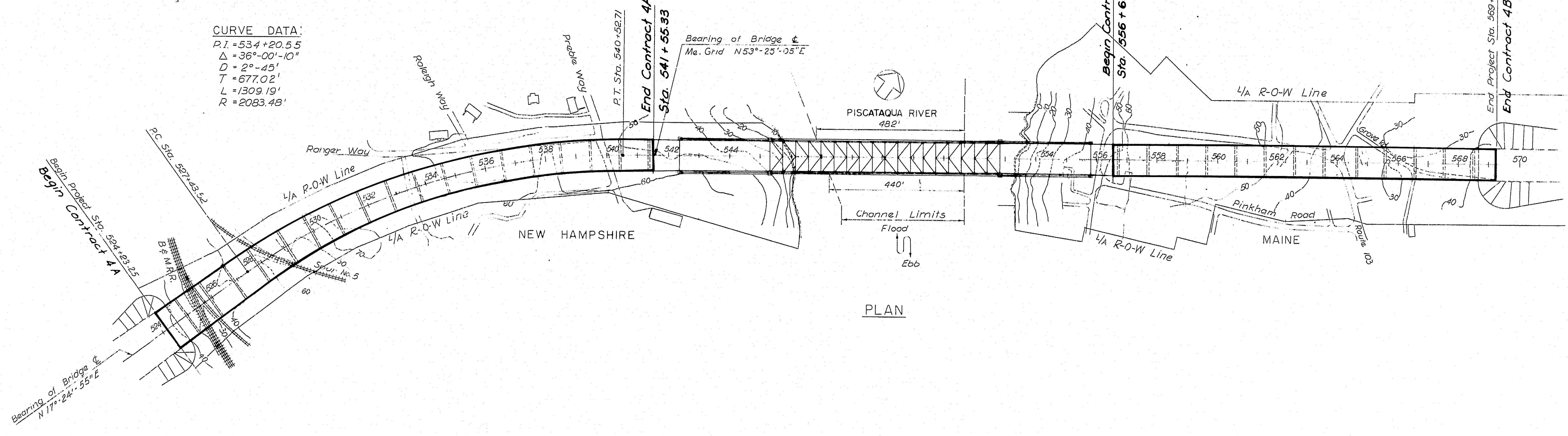
CURVE DATA:
P.I. = 534+20.55
Δ = 36°-00'-10"
D = 2°-45'
T = 677.02'
L = 1309.19'
R = 2083.48'
Begin Project Sta. 524+23.25
Begin Contract 4A
P.C. Sta. 527+43.52
Bearing of Bridge ℄ N 17°-24'-55"E
B.& M.R.R.
Spur No. 5
L/A R-O-W Line
L/A R-O-W Line
Ranger Way
Raleigh Way
Preble Way
NEW HAMPSHIRE
P.T. Sta. 540+52.71
End Contract 4A
Sta. 541+55.33
Bearing of Bridge ℄
Me. Grid N53°-25'-05"E
PISCATAQUA RIVER
482'
440'
Channel Limits
Flood
Ebb
Begin Contract 4B
Sta. 556+62.00
L/A R-O-W Line
L/A R-O-W Line
Grove Rd.
Pinkham Road
Route 103
MAINE
End Project Sta. 569+26.75
End Contract 4B
524
526
528
530
532
534
536
538
540
542
544
554
556
558
560
562
564
566
568
570

PLAN

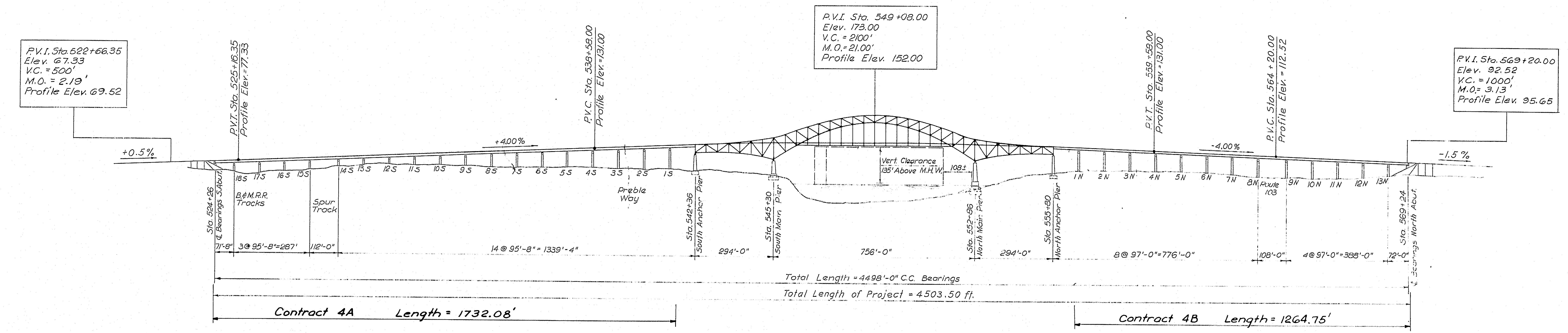
P.V.I. Sta. 522+66.35
Elev. 67.33
V.C. = 500'
M.O. = 2.19'
Profile Elev. 69.52
+0.5%
P.V.T. Sta. 525+16.35
Profile Elev. = 77.33
+4.00%
P.V.C. Sta. 538+58.00
Profile Elev. = 131.00
P.V.I. Sta. 549+08.00
Elev. 173.00
V.C. = 2100'
M.O. = 21.00'
Profile Elev. 152.00
P.V.T. Sta. 559+58.00
Profile Elev. = 131.00
-4.00%
P.V.C. Sta. 564+20.00
Profile Elev. = 112.52
P.V.I. Sta. 569+20.00
Elev. 92.52
V.C. = 1000'
M.O. = 3.13'
Profile Elev. 95.65
-1.5%
18S
17S
16S
15S
14S
13S
12S
11S
10S
9S
8S
7S
6S
5S
4S
3S
2S
1S
B.& M.R.R. Tracks
Spur Track
Preble Way
Vert. Clearance
135' Above M.H.W.
108±
1N
2N
3N
4N
5N
6N
7N
8N
Route 103
9N
10N
11N
12N
13N
Sta. 524+26 ℄ Bearings S. Abut.
Sta. 542+36 South Anchor Pier
Sta. 545+30 South Main Pier
Sta. 552+86 North Main Pier
Sta. 555+80 North Anchor Pier
Sta. 569+24 ℄ Bearings North Abut.
71'-8"
3@ 95'-8" = 287'
112'-0"
14 @ 95'-8" = 1339'-4"
294'-0"
756'-0"
294'-0"
8 @ 97'-0" = 776'-0"
108'-0"
4 @ 97'-0" = 388'-0"
72'-0"
Total Length = 4498'-0" C.C. Bearings
Total Length of Project = 4503.50 ft.
Contract 4A Length = 1732.08'
Contract 4B Length = 1264.75'

ELEVATION

Scale Hor. & Vert. 1" = 200'

4

DESIGN —
TRACE — S. Bradford
CHECK — R. W. Christie

BRIDGE NO.
IN CHARGE OF — R. W. Christie

NEW HAMPSHIRE
DEPARTMENT OF PUBLIC WORKS AND HIGHWAYS
AND
MAINE STATE HIGHWAY COMMISSION
INTERSTATE 95 BRIDGE
OVER
PISCATAQUA RIVER
BETWEEN
PORTSMOUTH, NEW HAMPSHIRE AND KITTERY, MAINE

PROJECT PLAN AND ELEVATION

SHEET 4 OF 44

HARDESTY & HANOVER
CONSULTING ENGINEERS
NEW YORK, N. Y.

129-55

B. P. R. REG. NO.	STATE	PROJECT NUMBER	SHEET NO.	TOTAL SHEETS
1	MAINE	I-95-1(22)16	5	44

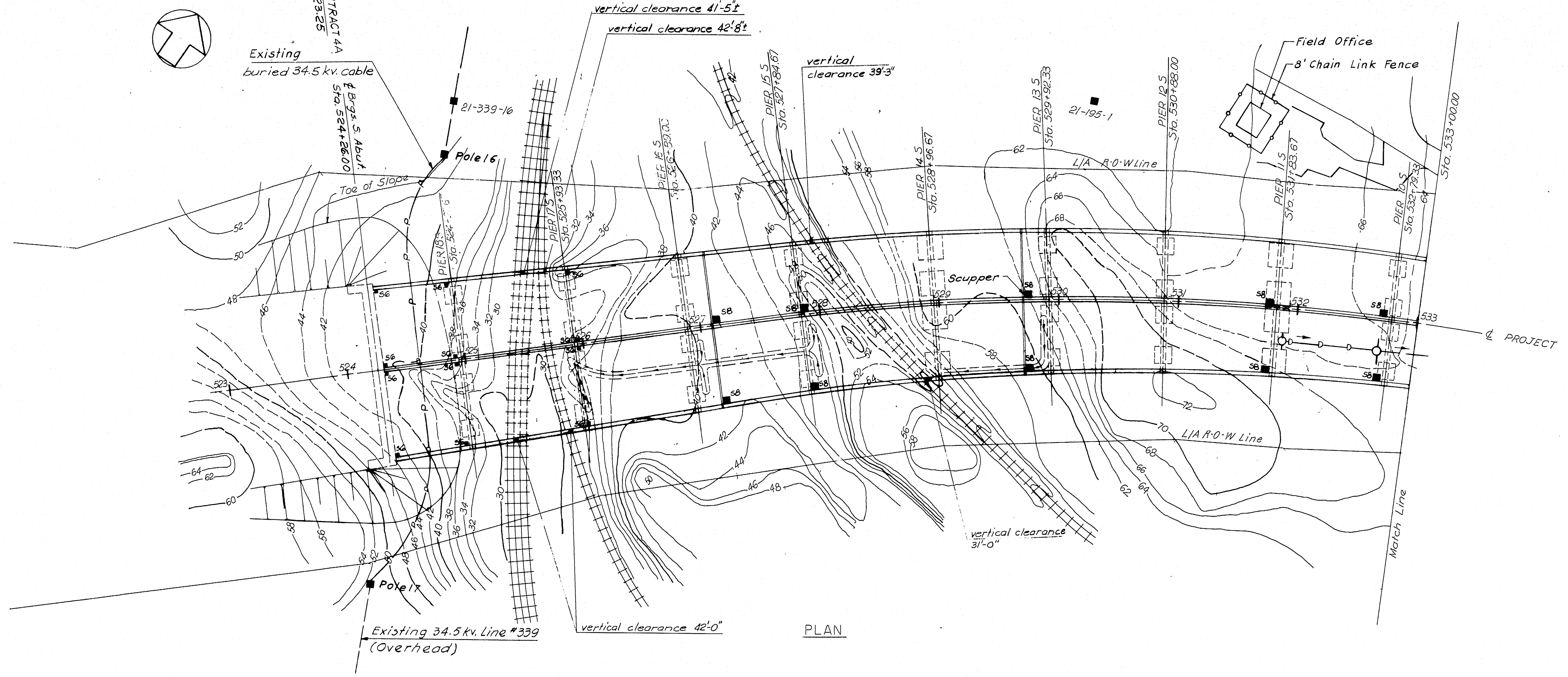
BEGIN CONTRACT 4A
Sta. 524+23.25
Existing
buried 34.5 kv. cable
℄ Brgs. S. Abut.
Sta. 524+26.00
21-339-16
Pole 16
Toe of Slope
vertical clearance 41'-5"±
vertical clearance 42'-8"±
vertical
clearance 39'-3"
PIER 18.5
PIER 17.5 Sta. 525+93.33
PIER 16.5
PIER 15.5 Sta. 527+84.61
PIER 14.5 Sta. 528+96.67
PIER 13.5 Sta. 529+92.33
PIER 12.5 Sta. 530+88.00
PIER 11.5 Sta. 531+83.67
PIER 10.5 Sta. 532+79.33
Sta. 533+00.00
21-195-1
Field Office
8' Chain Link Fence
L/A R-O-W Line
Scupper
℄ PROJECT
L/A R-O-W Line
Match Line
vertical clearance
31'-0"
Pole 17
Existing 34.5 kv. Line #339
(Overhead)
vertical clearance 42'-0"
21-339-19

PLAN

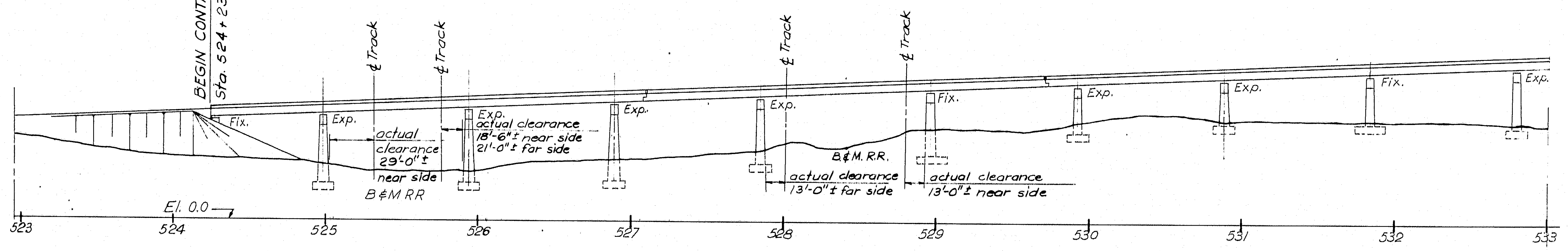
BEGIN CONTRACT 4A
Sta. 524+23.25
℄ Track
℄ Track
℄ Track
℄ Track
Fix.
Exp.
actual
clearance
29'-0"±
near side
B&M RR
Exp.
actual clearance
18'-6"± near side
21'-0"± far side
Exp.
Exp.
B&M RR.
actual clearance
13'-0"± far side
Fix.
actual clearance
13'-0"± near side
Exp.
Exp.
Fix.
Exp.
El. 0.0
523
524
525
526
527
528
529
530
531
532
533

ELEVATION

Scale Horiz. & Vert.: 1"=50'

4

DESIGN —
TRACE — S. Bradford
CHECK — H. R. Cattley & R. W. Christie

BRIDGE NO.
IN CHARGE OF — R. W. Christie

NEW HAMPSHIRE
DEPARTMENT OF PUBLIC WORKS AND HIGHWAYS
AND
MAINE STATE HIGHWAY COMMISSION
INTERSTATE 95 BRIDGE
OVER
PISCATAQUA RIVER
BETWEEN
PORTSMOUTH, NEW HAMPSHIRE AND KITTERY, MAINE

GENERAL PLAN & ELEVATION
STA. 524+25 - STA. 533+00

SHEET 5 OF 44

HARDESTY & HANOVER
CONSULTING ENGINEERS
NEW YORK, N. Y.

129-56

B. P. R. REG. NO.	STATE	PROJECT NUMBER	SHEET NO.	TOTAL SHEETS
1	MAINE	I-95-1(22)16	6	44

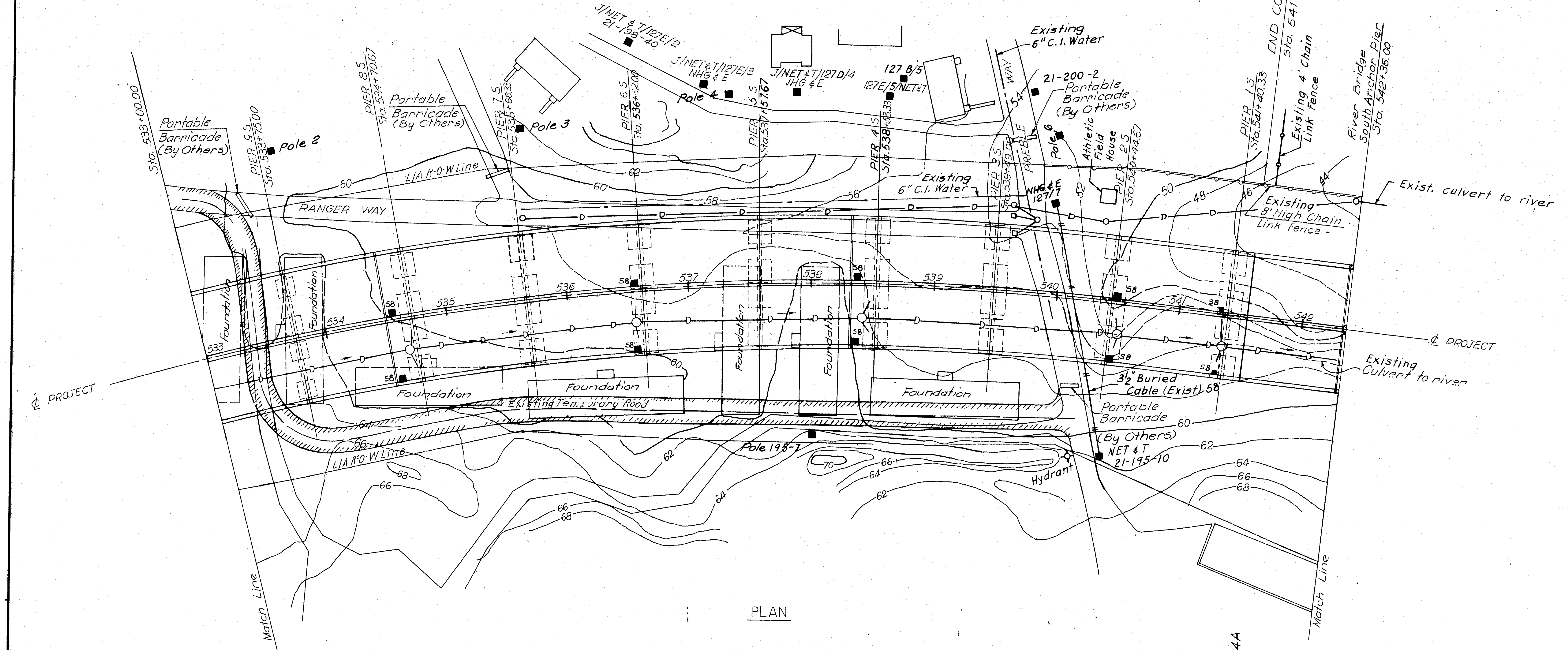
Sta. 533+00.00
Portable Barricade (By Others)
PIER 9S Sta. 533+75.00
Pole 2
PIER 8S Sta. 534+70.67
Portable Barricade (By Others)
PIER 7S Sta. 535+66.33
Pole 3
J/NET & T/127E/2 21-198-40
J/NET & T/127E/3 NHG & E
Pole 4
PIER 6S Sta. 536+62.00
PIER 5S Sta. 537+57.67
J/NET & T/127D/4 JHG & E
127 B/5
127E/5/NET & T
PIER 4S Sta. 538+53.33
Existing 6" C.I. Water
WAY
PREBLE
21-200-2
Portable Barricade (By Others)
Pole 6
Athletic Field House
PIER 3S Sta. 539+49.00
NHG & E 127/7
PIER 2S Sta. 540+44.67
PIER 1S Sta. 541+40.33
END CONTRACT 4A Sta. 541+55.33
Existing 4' Chain Link Fence
River Bridge South Anchor Pier Sta. 542+36.00
Exist. culvert to river
Existing 8' High Chain Link Fence
L/A R-O-W Line
RANGER WAY
Existing 6" C.I. Water
℄ PROJECT
Foundation
Foundation
Foundation
Foundation
Foundation
Foundation
Foundation
Existing Temporary Road
533
534
535
536
537
538
539
540
541
542
3½" Buried Cable (Exist.)
Existing Culvert to river
Portable Barricade (By Others)
NET & T 21-195-10
Hydrant
Pole 195-7
L/A R-O-W Line
Match Line
Match Line

PLAN

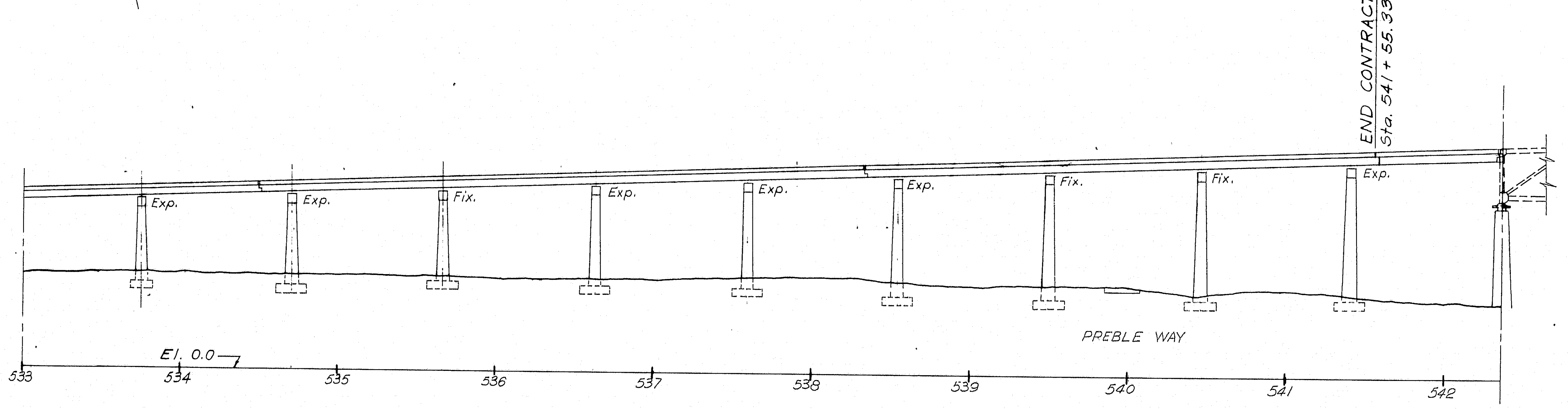
END CONTRACT 4A Sta. 541+55.33
Exp.
Exp.
Fix.
Exp.
Exp.
Exp.
Fix.
Fix.
Exp.
PREBLE WAY
El. 0.0
533
534
535
536
537
538
539
540
541
542

ELEVATION

Scale Horiz. & Vert.: 1" = 50'

4

DESIGN —
TRACE — S. Bradford
CHECK — H.R. Cattley + R.W. Christie

BRIDGE NO.
IN CHARGE OF — R.W. Christie

NEW HAMPSHIRE
DEPARTMENT OF PUBLIC WORKS AND HIGHWAYS
AND
MAINE STATE HIGHWAY COMMISSION
INTERSTATE 95 BRIDGE
OVER
PISCATAQUA RIVER
BETWEEN
PORTSMOUTH, NEW HAMPSHIRE AND KITTERY, MAINE

GENERAL PLAN & ELEVATION
STA. 533+00 - STA. 542+36

SHEET 6 OF 44

HARDESTY & HANOVER
CONSULTING ENGINEERS
NEW YORK, N. Y.

129-57

B. P. R. REG. NO.	STATE	PROJECT NUMBER	SHEET NO.	TOTAL SHEETS
1	MAINE	I-95-1 (22) 16	7	44

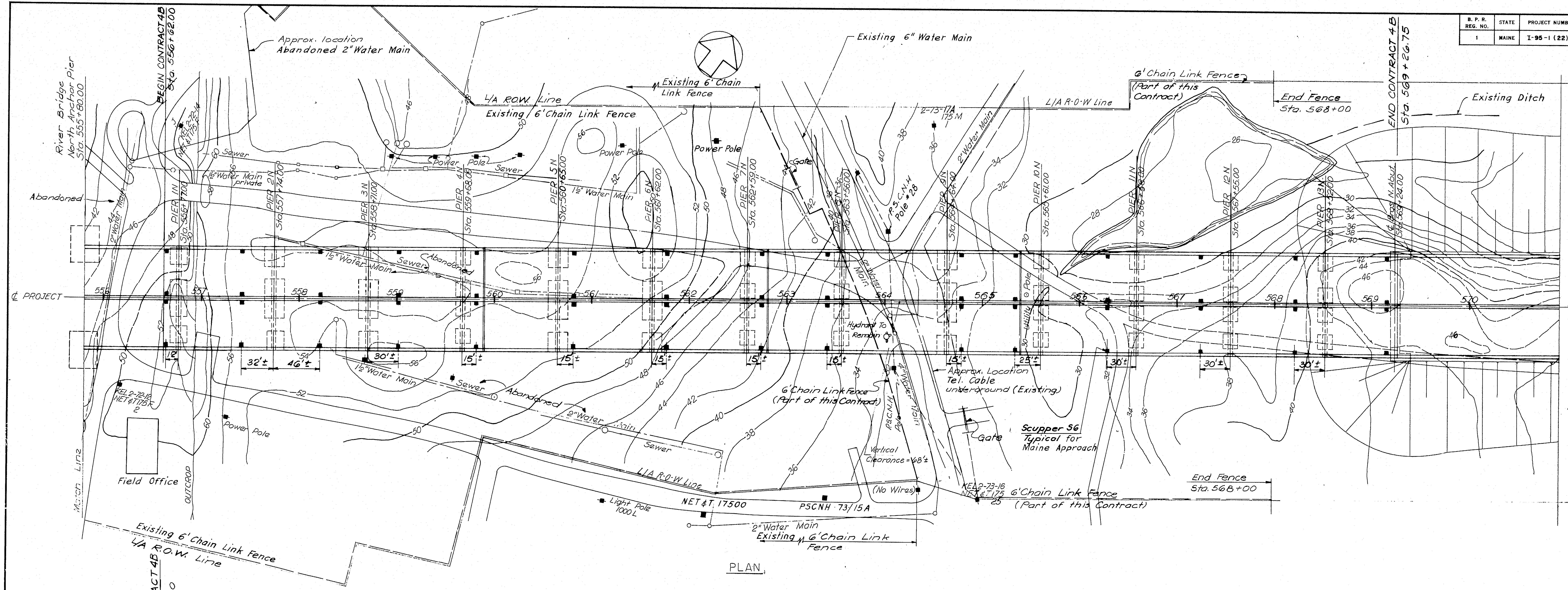
River Bridge
North Anchor Pier
Sta. 555+80.00
BEGIN CONTRACT 4B
Sta. 556+62.00
Approx. location
Abandoned 2" Water Main
L/A ROW Line
Existing 6' Chain Link Fence
Existing 6' Chain Link Fence
Existing 6" Water Main
6' Chain Link Fence (Part of this Contract)
L/A R-O-W Line
End Fence
Sta. 568+00
END CONTRACT 4B
Sta. 569+26.75
Existing Ditch
Abandoned
2" Water Main
Sewer
1½" Water Main private
Power Pole
Power Pole
Power Pole
Gate
2-73-17A
175 M
2" Water Main
P.S.C.N.H. Pole #28
PIER 1N Sta. 556+77.00
PIER 2N Sta. 557+74.00
PIER 3N Sta. 558+71.00
PIER 4N Sta. 559+68.00
PIER 5N Sta. 560+65.00
PIER 6N Sta. 561+62.00
PIER 7N Sta. 562+59.00
PIER 8N Sta. 563+56.00
PIER 9N Sta. 564+64.00
PIER 10N Sta. 565+61.00
PIER 11N Sta. 566+58.00
PIER 12N Sta. 567+55.00
PIER 13N Sta. 568+52.00
℄ Brg. N. Abut. Sta. 569+24.00
℄ PROJECT
556
557
558
559
560
561
562
563
564
565
566
567
568
569
570
℄ PROJECT
1½" Water Main
Sewer
Abandoned
12'
32'±
46'±
30'±
15'±
15'±
15'±
15'±
15'±
15'±
25'±
30'±
30'±
30'±
Hydrant To Remain
Pole
Utility
KEL 2-72-14
NET&T 175 F
KEL 2-72-12
NET&T 175 F
2
Power Pole
Field Office
OUTCROP
Match Line
1½" Water Main
Sewer
Abandoned
2" Water Main
Sewer
6' Chain Link Fence
(Part of this Contract)
P.S.C.N.H. Pole
2" Water Main
Approx. Location
Tel. Cable
underground (Existing)
Gate
Scupper S6
Typical for
Maine Approach
Vertical
Clearance = 68'±
(No Wires)
L/A R-O-W Line
Light Pole
1000 L
NET & T 17500
PSCNH 73/15A
2" Water Main
Existing 6' Chain Link Fence
KEL 2-73-16
NET&T 175
25
6' Chain Link Fence
(Part of this Contract)
End Fence
Sta. 568+00
Existing 6' Chain Link Fence
L/A R.O.W. Line
BEGIN CONTRACT 4B
Sta. 556+62.00

PLAN

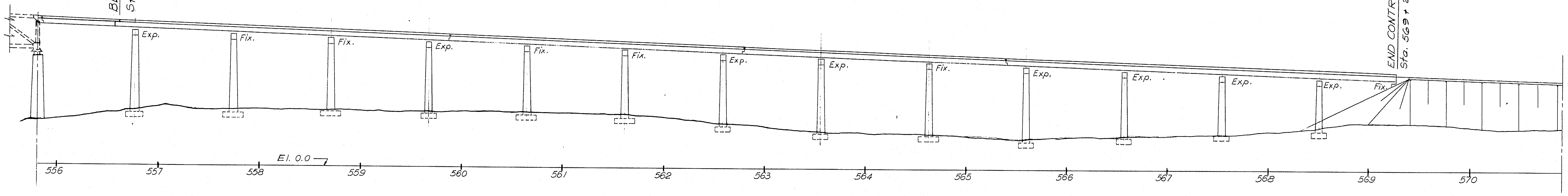
BEGIN CONTRACT 4B
Sta. 556+62.00
END CONTRACT 4B
Sta. 569+26.75
Exp.
Fix.
Fix.
Exp.
Fix.
Fix.
Exp.
Exp.
Fix.
Exp.
Exp.
Exp.
Exp.
Fix.
El. 0.0
556
557
558
559
560
561
562
563
564
565
566
567
568
569
570

ELEVATION

Scale Horiz. & Vert.: 1" = 50'

4

DESIGN —
TRACE — J. Bradford
CHECK — H. R. Cattley & R. W. Christie

BRIDGE NO.
IN CHARGE OF — R. W. Christie

NEW HAMPSHIRE
DEPARTMENT OF PUBLIC WORKS AND HIGHWAYS
AND
MAINE STATE HIGHWAY COMMISSION
INTERSTATE 95 BRIDGE
OVER
PISCATAQUA RIVER
BETWEEN
PORTSMOUTH, NEW HAMPSHIRE AND KITTERY, MAINE

HARDESTY & HANOVER
CONSULTING ENGINEERS
NEW YORK, N. Y.

GENERAL PLAN & ELEVATION
STA. 555+80 - STA. 569+24

SHEET 7 OF 44

129-58

B. P. R. REG. NO.	STATE	PROJECT NUMBER	SHEET NO.	TOTAL SHEETS
1	MAINE	I-95-1(22)16	8	44

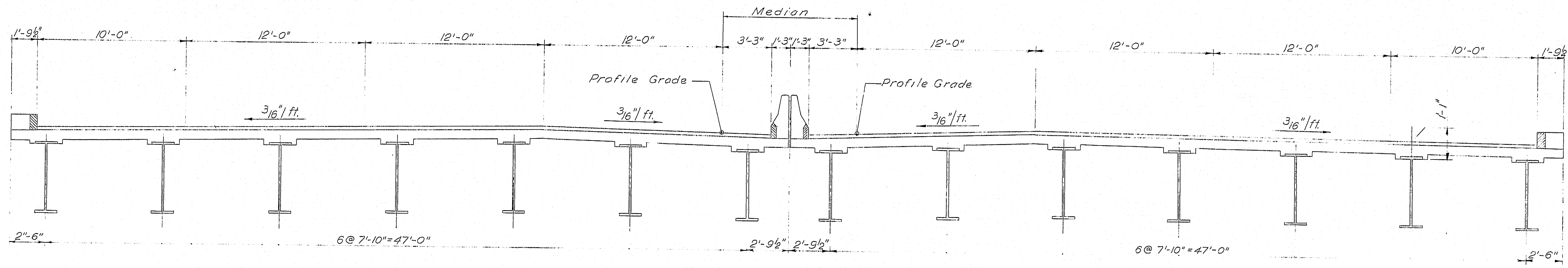
Median
1'-9½"
10'-0"
12'-0"
12'-0"
12'-0"
3'-3"
1'-3"
1'-3"
3'-3"
12'-0"
12'-0"
12'-0"
10'-0"
1'-9½"
Profile Grade
Profile Grade
3/16"/ft.
3/16"/ft.
3/16"/ft.
3/16"/ft.
1'-1"
2'-6"
6 @ 7'-10" = 47'-0"
2'-9½"
2'-9½"
6 @ 7'-10" = 47'-0"
2'-6"

APPROACH SPANS - NORMAL SECTION

_ Top of stringer web to top of wearing surface

NOTE: STRUCTURAL STEEL BY OTHERS

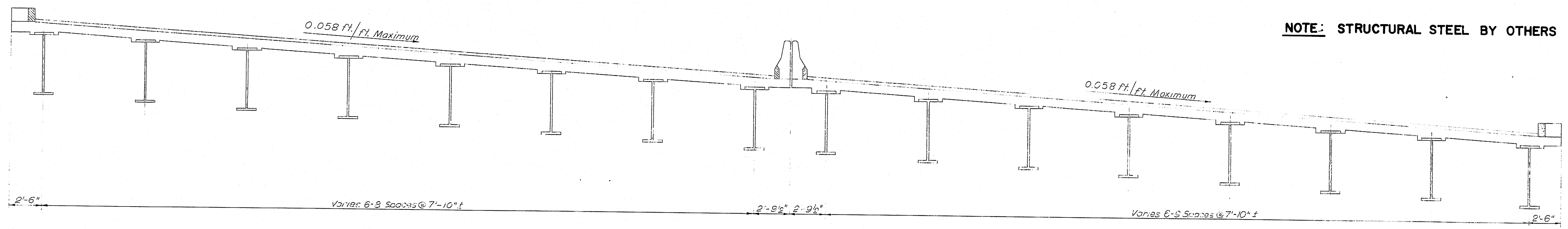
0.058 ft./ft. Maximum
0.058 ft./ft. Maximum
2'-6"
Varies 6-8 Spaces @ 7'-10" ±
2'-9½"
2'-9½"
Varies 6-9 Spaces @ 7'-10" ±
2'-6"

APPROACH SPANS - SUPERELEVATED SECTION

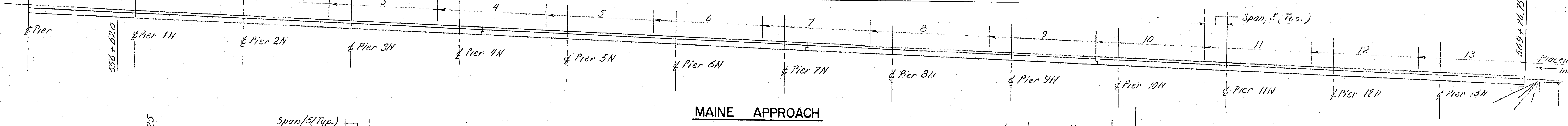
1
2
3
4
5
6
7
8
9
10
11
12
13
Span/5 (Typ.)
℄ Pier
556+62.0
℄ Pier 1N
℄ Pier 2N
℄ Pier 3N
℄ Pier 4N
℄ Pier 5N
℄ Pier 6N
℄ Pier 7N
℄ Pier 8N
℄ Pier 9N
℄ Pier 10N
℄ Pier 11N
℄ Pier 12N
℄ Pier 13N
569+26.75
Placement Sequence No.
← Indicates Dir. of Placement

MAINE APPROACH

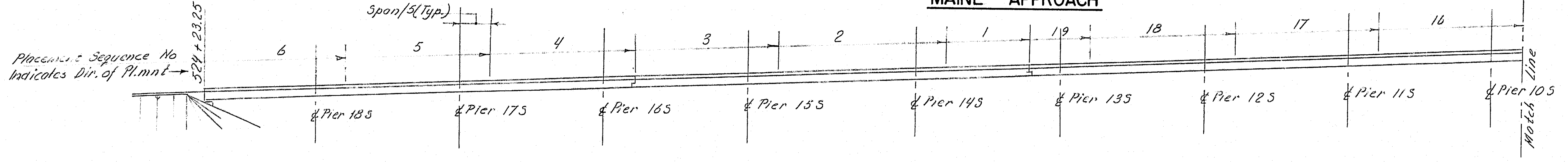
Span/5(Typ.)
Placement Sequence No
Indicates Dir. of Pl.mnt →
524+23.25
6
5
4
3
2
1
19
18
17
16
℄ Pier 18S
℄ Pier 17S
℄ Pier 16S
℄ Pier 15S
℄ Pier 14S
℄ Pier 13S
℄ Pier 12S
℄ Pier 11S
℄ Pier 10S
Match Line

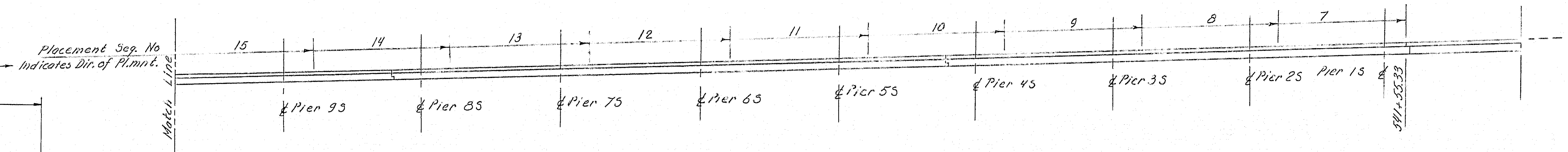
Placement Seq. No
→ Indicates Dir. of Pl.mnt.
Match Line
15
14
13
12
11
10
9
8
7
℄ Pier 9S
℄ Pier 8S
℄ Pier 7S
℄ Pier 6S
℄ Pier 5S
℄ Pier 4S
℄ Pier 3S
℄ Pier 2S
Pier 1S ℄
541+55.33

NEW HAMPSHIRE APPROACH

DECK CONCRETE PLACEMENT SEQUENCE

NOTE:
If approved by the Engineer, alternate Placement Schedules may be used

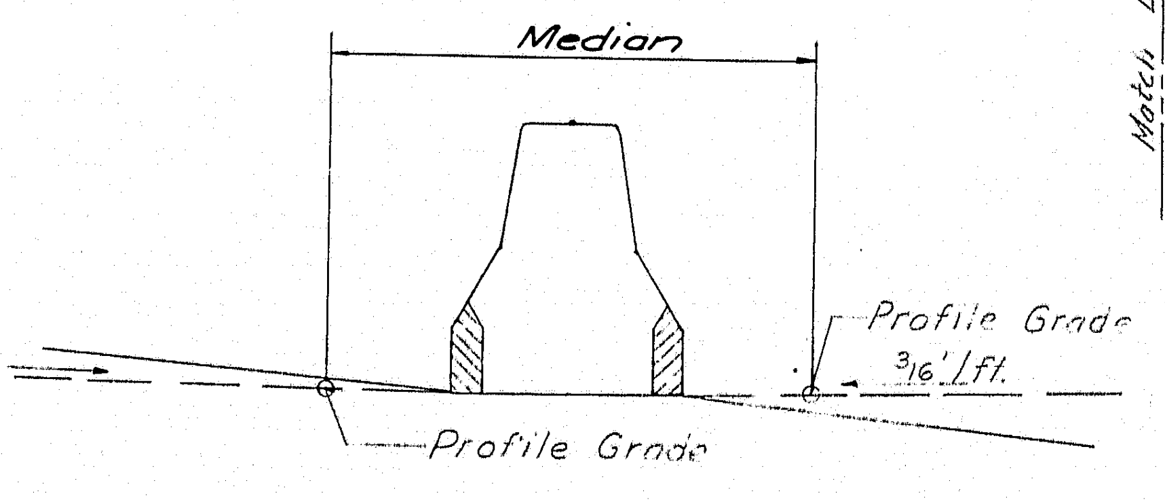
Median
3/16"/ft.
Profile Grade
3/16"/ft.
Profile Grade

GEOMETRY OF THEORETICAL PROFILE
No Scale

4

DESIGN —
TRACE — C.J.
CHECK — S.H.

BRIDGE NO.
IN CHARGE OF — R.W. Christie

NEW HAMPSHIRE
DEPARTMENT OF PUBLIC WORKS AND HIGHWAYS
AND
MAINE STATE HIGHWAY COMMISSION
INTERSTATE 95 BRIDGE
OVER
PISCATAQUA RIVER
BETWEEN
PORTSMOUTH, NEW HAMPSHIRE AND KITTERY, MAINE

TYPICAL SECTIONS

HARDESTY & HANOVER
CONSULTING ENGINEERS
NEW YORK, N. Y.

SHEET 8 OF 44

129-59

B. P. R. REG. NO.	STATE	PROJECT NUMBER	SHEET NO.	TOTAL SHEETS
1	MAINE	I-95-1(22)16	9	44

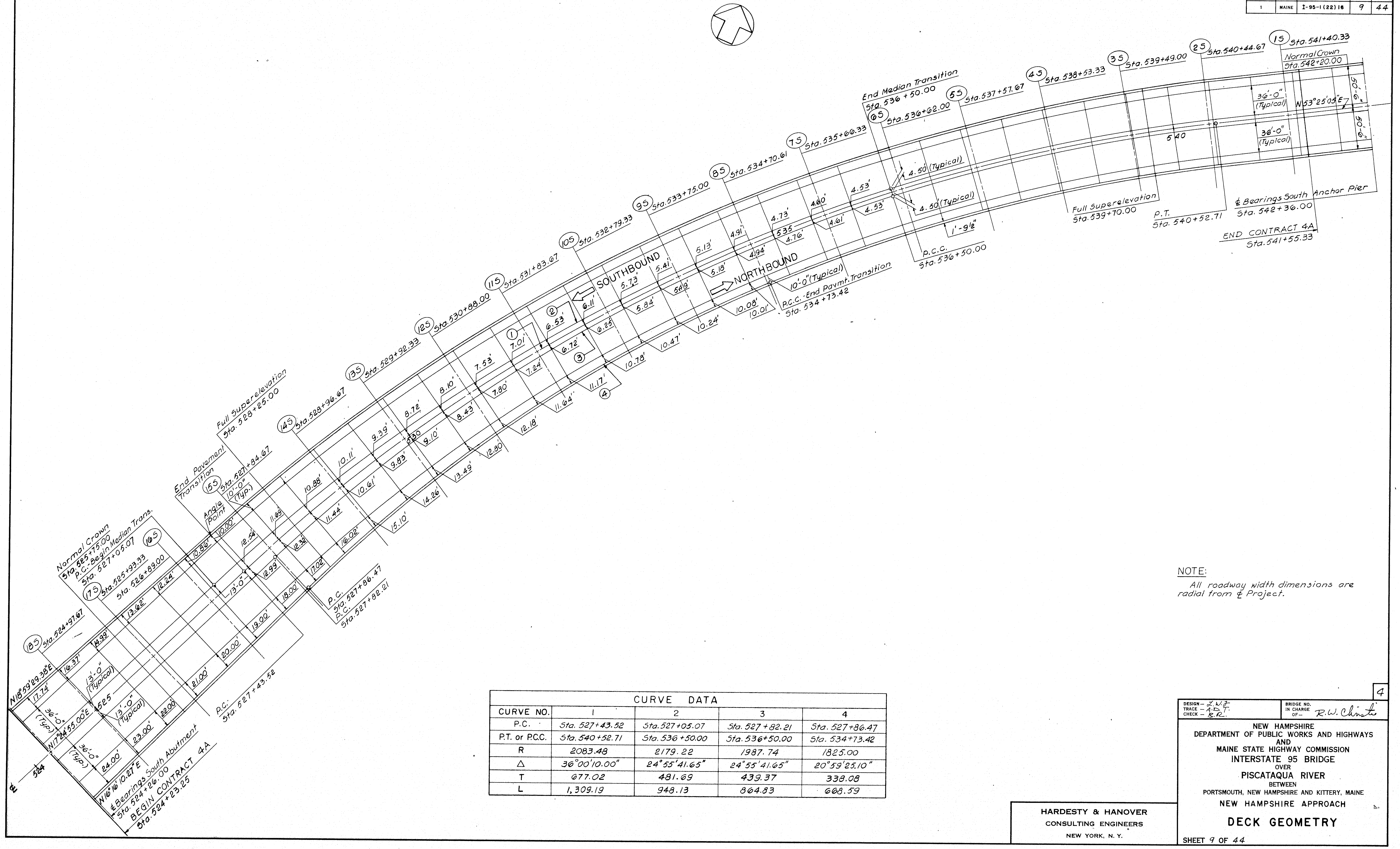

(1S) Sta. 541+40.33
Normal Crown Sta. 542+20.00
(2S) Sta. 540+44.67
(3S) Sta. 539+49.00
(4S) Sta. 538+53.33
(5S) Sta. 537+57.67
End Median Transition Sta. 536+50.00
(6S) Sta. 536+62.00
(7S) Sta. 535+66.33
(8S) Sta. 534+70.61
(9S) Sta. 533+75.00
(10S) Sta. 532+79.33
(11S) Sta. 531+83.67
(12S) Sta. 530+88.00
(13S) Sta. 529+92.33
(14S) Sta. 528+96.67
(15S) Sta. 527+84.67
(16S) Sta. 526+89.00
(17S) Sta. 525+93.33
(18S) Sta. 524+97.67
36'-0" (Typical)
36'-0" (Typical)
50'-6"
50'-6"
N 53°25'05"E
540
4.50' (Typical)
4.50' (Typical)
1'-9½"
4.53'
4.53'
4.60'
4.61'
4.73'
4.76'
535
4.91'
4.94'
5.13'
5.18'
5.41'
5.49'
5.73'
5.84'
6.11'
6.25'
6.53'
6.72'
7.01'
7.24'
7.53'
7.80'
8.10'
8.43'
8.72'
9.10'
530
9.39'
9.83'
10.11'
10.61'
10.88'
11.44'
11.69'
12.32'
12.54'
12.99'
10.86'
10.00'
12.24'
13.62'
14.99'
16.37'
17.74'
10.01'
10.08'
10.24'
10.47'
10.78'
11.17'
11.64'
12.18'
12.80'
13.49'
14.26'
15.10'
16.02'
17.02'
18.00'
19.00'
20.00'
21.00'
22.00'
23.00'
24.00'
① ② ③ ④
SOUTHBOUND
NORTHBOUND
10'-0" (Typical)
P.C.C.-End Pavmt. Transition Sta. 534+73.42
P.C.C. Sta. 536+50.00
Full Superelevation Sta. 539+70.00
P.T. Sta. 540+52.71
℄ Bearings South Anchor Pier Sta. 542+36.00
END CONTRACT 4A Sta. 541+55.33
Full Superelevation Sta. 528+25.00
End Pavement Transition
10'-0" (Typ.)
Angle Point
13'-0"
P.C. Sta. 527+86.47
P.C. Sta. 527+82.21
Normal Crown Sta. 525+75.00
P.C.-Begin Median Trans. Sta. 527+05.07
13'-0" (Typical)
13'-0" (Typical)
525
N18°59'29.38"E
36'-0" (Typ.)
N17°24'55.00"E
36'-0" (Typ.)
N16°16'10.27"E
℄ Bearings South Abutment Sta. 524+26.00
BEGIN CONTRACT 4A Sta. 524+23.25
P.C. Sta. 527+43.52
℄
524

NOTE:
All roadway width dimensions are radial from ℄ Project.

CURVE DATA				
CURVE NO.	1	2	3	4
P.C.	Sta. 527+43.52	Sta. 527+05.07	Sta. 527+82.21	Sta. 527+86.47
P.T. or P.C.C.	Sta. 540+52.71	Sta. 536+50.00	Sta. 536+50.00	Sta. 534+73.42
R	2083.48	2179.22	1987.74	1825.00
△	36°00'10.00"	24°55'41.65"	24°55'41.65"	20°59'25.10"
T	677.02	481.69	439.37	338.08
L	1,309.19	948.13	864.83	668.59

4

DESIGN – Z.W.J.
TRACE – A.D.T.
CHECK – B.R.

BRIDGE NO.
IN CHARGE OF – R.W. Christie

NEW HAMPSHIRE
DEPARTMENT OF PUBLIC WORKS AND HIGHWAYS
AND
MAINE STATE HIGHWAY COMMISSION
INTERSTATE 95 BRIDGE
OVER
PISCATAQUA RIVER
BETWEEN
PORTSMOUTH, NEW HAMPSHIRE AND KITTERY, MAINE
NEW HAMPSHIRE APPROACH

DECK GEOMETRY

SHEET 9 OF 44

HARDESTY & HANOVER
CONSULTING ENGINEERS
NEW YORK, N. Y.

129-60

B. P. R. REG. NO.	STATE	PROJECT NUMBER	SHEET NO.	TOTAL SHEETS
1	MAINE	I-95-1(22)16	10	44

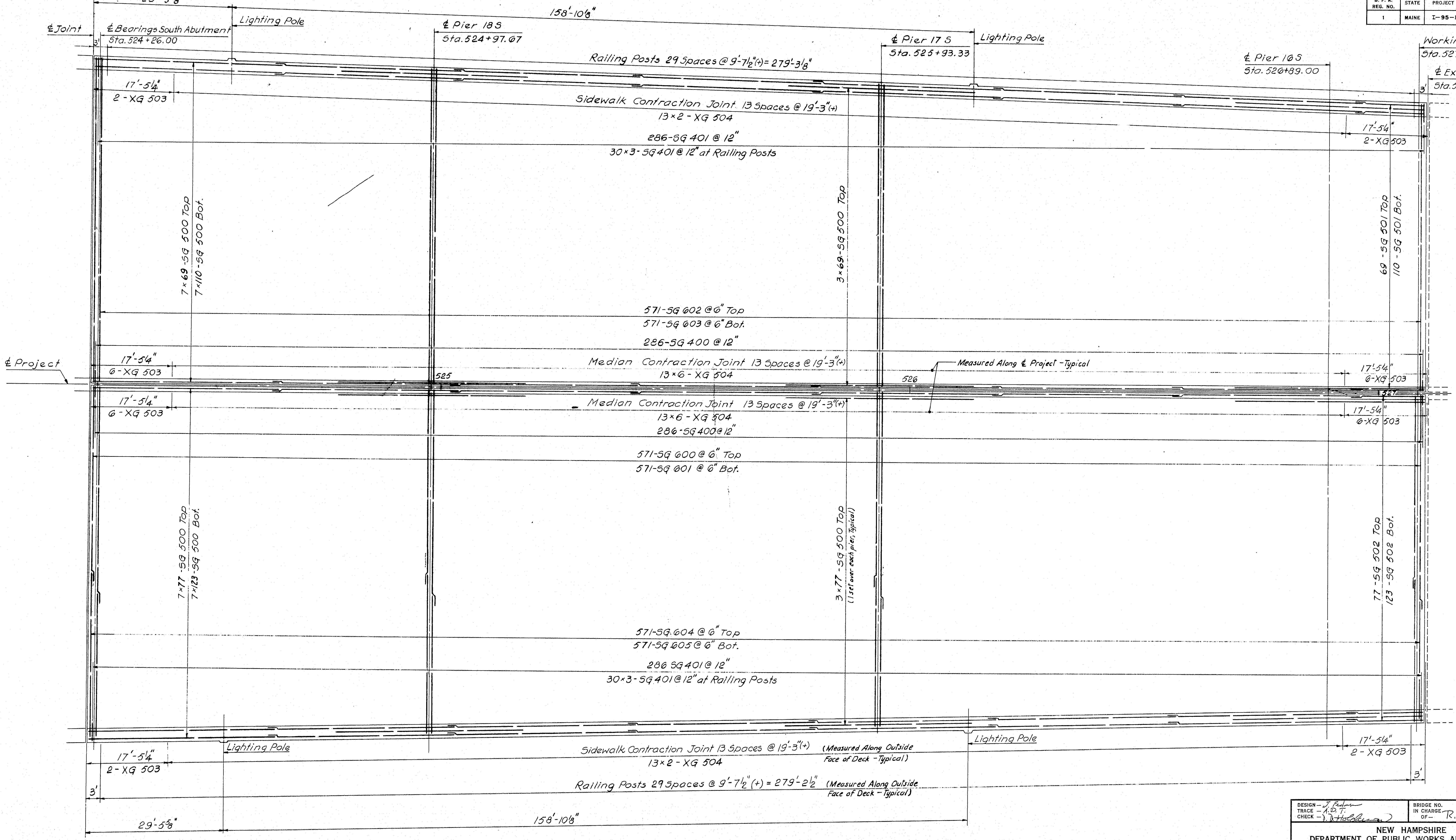
29'-5⅝"
158'-10⅛"
℄ Joint
℄ Bearings South Abutment
Sta. 524+26.00
Lighting Pole
℄ Pier 18 S
Sta. 524+97.67
℄ Pier 17 S
Sta. 525+93.33
Lighting Pole
℄ Pier 16 S
Sta. 526+89.00
Working Line
Sta. 527+08.00
℄ Exp. Joint
Sta. 527+09.94
3'
Railing Posts 29 Spaces @ 9'-7½"(+) = 279'-3⅛"
17'-5¼"
2 - XG 503
Sidewalk Contraction Joint 13 Spaces @ 19'-3"(+)
13×2 - XG 504
286-SG 401 @ 12"
30×3 - SG 401 @ 12" at Railing Posts
17'-5¼"
2 - XG 503
7×69 - SG 500 Top
7×110 - SG 500 Bot.
3×69 - SG 500 Top
69 - SG 501 Top
110 - SG 501 Bot.
571-SG 602 @ 6" Top
571-SG 603 @ 6" Bot.
286-SG 400 @ 12"
℄ Project
17'-5¼"
6 - XG 503
Median Contraction Joint 13 Spaces @ 19'-3"(+)
13×6 - XG 504
525
526
527
Measured Along ℄ Project - Typical
17'-5¼"
6 - XG 503
17'-5¼"
6 - XG 503
Median Contraction Joint 13 Spaces @ 19'-3"(+)
13×6 - XG 504
286-SG 400 @ 12"
17'-5¼"
6 - XG 503
571-SG 600 @ 6" Top
571-SG 601 @ 6" Bot.
7×77 - SG 500 Top
7×123 - SG 500 Bot.
3×77 - SG 500 Top
(1 set over each pier, Typical)
77 - SG 502 Top
123 - SG 502 Bot.
571-SG 604 @ 6" Top
571-SG 605 @ 6" Bot.
286 SG 401 @ 12"
30×3 - SG 401 @ 12" at Railing Posts
17'-5¼"
2 - XG 503
Lighting Pole
Sidewalk Contraction Joint 13 Spaces @ 19'-3"(+)
13×2 - XG 504
(Measured Along Outside Face of Deck - Typical)
Lighting Pole
17'-5¼"
2 - XG 503
3'
Railing Posts 29 Spaces @ 9'-7½"(+) = 279'-2½"
(Measured Along Outside Face of Deck - Typical)
3'
29'-5⅝"
158'-10⅛"

NOTE:
For reinforcing at Scuppers see Scupper details.

4

DESIGN — J. Fedum
TRACE — A.D.T.
CHECK — D. D. Holdeman

BRIDGE NO.
IN CHARGE OF — R.W. Christie

HARDESTY & HANOVER
CONSULTING ENGINEERS
NEW YORK, N. Y.

NEW HAMPSHIRE
DEPARTMENT OF PUBLIC WORKS AND HIGHWAYS
AND
MAINE STATE HIGHWAY COMMISSION
INTERSTATE 95 BRIDGE
OVER
PISCATAQUA RIVER
BETWEEN
PORTSMOUTH, NEW HAMPSHIRE AND KITTERY, MAINE
NEW HAMPSHIRE APPROACH
DECK SLAB LAYOUT
STA. 524 + 25 TO STA. 527 + 10
SHEET 10 OF 44

129-61

B. P. R. REG. NO.	STATE	PROJECT NUMBER	SHEET NO.	TOTAL SHEETS
1	MAINE	I-95-1(22)16	11	44

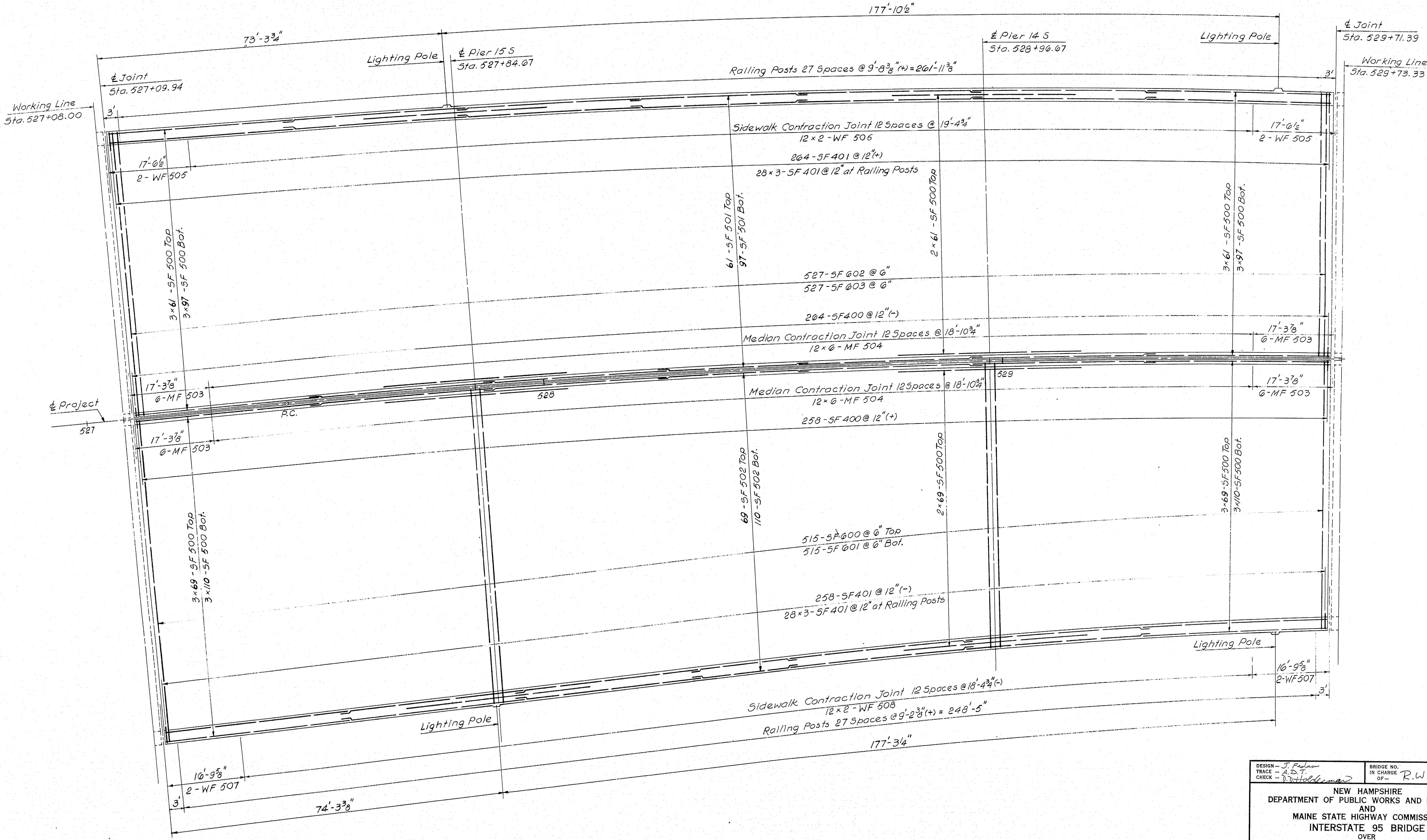

177'-10 1/2"
73'-3 3/4"
Lighting Pole
℄ Pier 15 S
Sta. 527+84.67
℄ Pier 14 S
Sta. 528+96.67
Lighting Pole
℄ Joint
Sta. 529+71.39
Working Line
Sta. 529+73.33
℄ Joint
Sta. 527+09.94
Working Line
Sta. 527+08.00
3'
3'
Railing Posts 27 Spaces @ 9'-8 3/8"(+) = 261'-11 3/8"
Sidewalk Contraction Joint 12 Spaces @ 19'-4 3/4"
12 × 2 - WF 506
17'-6 1/2"
2 - WF 505
17'-6 1/2"
2 - WF 505
264 - SF 401 @ 12"(+)
28 × 3 - SF 401 @ 12" at Railing Posts
3×61 - SF 500 Top
3×97 - SF 500 Bot.
61 - SF 501 Top
97 - SF 501 Bot.
2×61 - SF 500 Top
3×61 - SF 500 Top
3×97 - SF 500 Bot.
527 - SF 602 @ 6"
527 - SF 603 @ 6"
264 - SF 400 @ 12"(-)
Median Contraction Joint 12 Spaces @ 18'-10 3/4"
12 × 6 - MF 504
17'-3 7/8"
6 - MF 503
17'-3 7/8"
6 - MF 503
℄ Project
527
528
529
P.C.
Median Contraction Joint 12 Spaces @ 18'-10 3/4"
12 × 6 - MF 504
17'-3 7/8"
6 - MF 503
17'-3 7/8"
6 - MF 503
258 - SF 400 @ 12"(+)
3×69 - SF 500 Top
3×110 - SF 500 Bot.
69 - SF 502 Top
110 - SF 502 Bot.
2×69 - SF 500 Top
3×69 - SF 500 Top
3×110 - SF 500 Bot.
515 - SF 600 @ 6" Top
515 - SF 601 @ 6" Bot.
258 - SF 401 @ 12"(-)
28 × 3 - SF 401 @ 12" at Railing Posts
Lighting Pole
16'-9 5/8"
2 - WF 507
3'
Sidewalk Contraction Joint 12 Spaces @ 18'-4 3/4"(-)
12 × 2 - WF 508
Railing Posts 27 Spaces @ 9'-2 3/8"(+) = 248'-5"
Lighting Pole
177'-3 1/4"
16'-9 5/8"
2 - WF 507
3'
74'-3 3/8"

4

DESIGN – J. Fedun
TRACE – A.D.T.
CHECK – D.D. Holdeman

BRIDGE NO.
IN CHARGE OF – R.W. Christie

NEW HAMPSHIRE
DEPARTMENT OF PUBLIC WORKS AND HIGHWAYS
AND
MAINE STATE HIGHWAY COMMISSION

INTERSTATE 95 BRIDGE
OVER
PISCATAQUA RIVER
BETWEEN
PORTSMOUTH, NEW HAMPSHIRE AND KITTERY, MAINE

NEW HAMPSHIRE APPROACH
DECK SLAB LAYOUT
STA. 527 + 10 TO STA. 529 + 71

SHEET 11 OF 44

HARDESTY & HANOVER
CONSULTING ENGINEERS
NEW YORK, N. Y.

129-62

B. P. R. REG. NO.	STATE	PROJECT NUMBER	SHEET NO.	TOTAL SHEETS
1	MAINE	I-95-1(22)16	12	44

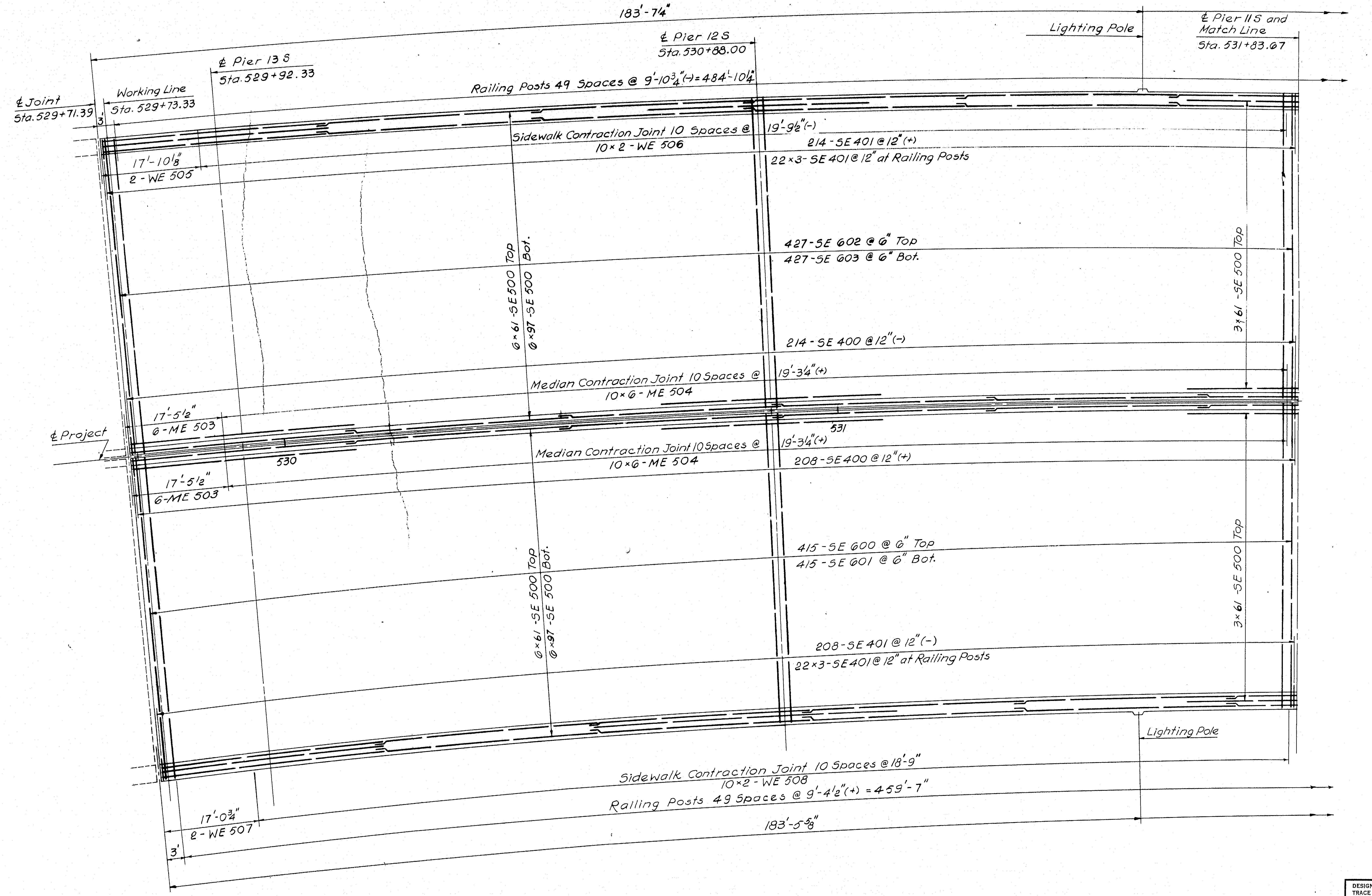

183'-7¼"
℄ Pier 12 S
Sta. 530+88.00
Lighting Pole
℄ Pier 11 S and
Match Line
Sta. 531+83.67
℄ Pier 13 S
Sta. 529+92.33
Railing Posts 49 Spaces @ 9'-10¾"(-) = 484'-10¼"
℄ Joint
Sta. 529+71.39
Working Line
Sta. 529+73.33
3'
Sidewalk Contraction Joint 10 Spaces @
10 × 2 - WE 506
19'-9½"(-)
214 - SE 401 @ 12"(+)
22 × 3 - SE 401 @ 12" at Railing Posts
17'-10⅛"
2 - WE 505
6 × 61 - SE 500 Top
6 × 97 - SE 500 Bot.
427 - SE 602 @ 6" Top
427 - SE 603 @ 6" Bot.
3 × 61 - SE 500 Top
214 - SE 400 @ 12"(-)
Median Contraction Joint 10 Spaces @
10 × 6 - ME 504
19'-3¼"(+)
17'-5½"
6 - ME 503
℄ Project
530
531
Median Contraction Joint 10 Spaces @
10 × 6 - ME 504
19'-3¼"(+)
208 - SE 400 @ 12"(+)
17'-5½"
6 - ME 503
415 - SE 600 @ 6" Top
415 - SE 601 @ 6" Bot.
6 × 61 - SE 500 Top
6 × 97 - SE 500 Bot.
3 × 61 - SE 500 Top
208 - SE 401 @ 12"(-)
22 × 3 - SE 401 @ 12" at Railing Posts
Lighting Pole
Sidewalk Contraction Joint 10 Spaces @ 18'-9"
10 × 2 - WE 508
Railing Posts 49 Spaces @ 9'-4½"(+) = 459'-7"
17'-0¾"
2 - WE 507
183'-5⅝"
3'

4

DESIGN – J. Feduc
TRACE – A.D.T.
CHECK – D.D. Holderman

BRIDGE NO.
IN CHARGE OF – R.W. Christie

NEW HAMPSHIRE
DEPARTMENT OF PUBLIC WORKS AND HIGHWAYS
AND
MAINE STATE HIGHWAY COMMISSION
INTERSTATE 95 BRIDGE
OVER
PISCATAQUA RIVER
BETWEEN
PORTSMOUTH, NEW HAMPSHIRE AND KITTERY, MAINE
NEW HAMPSHIRE APPROACH

DECK SLAB LAYOUT
STA. 529 + 71 TO STA. 531 + 82

SHEET 12 OF 44

HARDESTY & HANOVER
CONSULTING ENGINEERS
NEW YORK, N. Y.

129-63

B. P. R. REG. NO.	STATE	PROJECT NUMBER	SHEET NO.	TOTAL SHEETS
1	MAINE	I-95-1(22)16	13	44

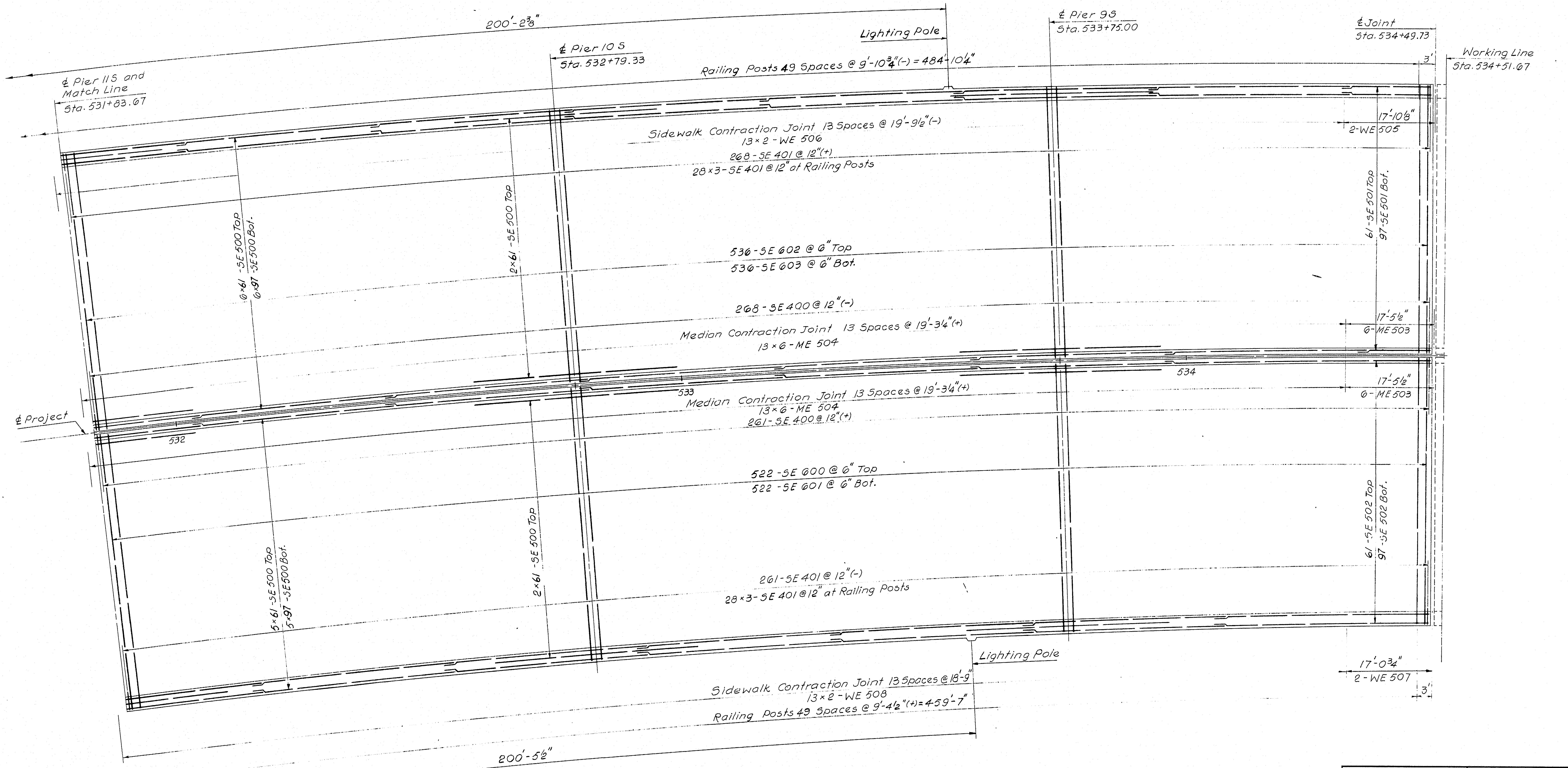

200'-2⅜"
℄ Pier 10 S
Sta. 532+79.33
Lighting Pole
℄ Pier 9 S
Sta. 533+75.00
℄ Joint
Sta. 534+49.73
Working Line
Sta. 534+51.67
3'
℄ Pier 11 S and Match Line
Sta. 531+83.07
Railing Posts 49 Spaces @ 9'-10¾"(-) = 484'-10¼"
Sidewalk Contraction Joint 13 Spaces @ 19'-9½"(-)
13×2-WE 506
268-5E 401 @ 12"(+)
28×3-5E 401 @ 12" at Railing Posts
17'-10⅛"
2-WE 505
6×61-5E 500 Top
6×97-5E 500 Bot.
2×61-5E 500 Top
61-5E 501 Top
97-5E 501 Bot.
536-5E 602 @ 6" Top
536-5E 603 @ 6" Bot.
268-5E 400 @ 12"(-)
17'-5½"
6-ME 503
Median Contraction Joint 13 Spaces @ 19'-3¼"(+)
13×6-ME 504
534
533
℄ Project
532
Median Contraction Joint 13 Spaces @ 19'-3¼"(+)
13×6-ME 504
261-5E 400 @ 12"(+)
17'-5½"
6-ME 503
522-5E 600 @ 6" Top
522-5E 601 @ 6" Bot.
61-5E 502 Top
97-5E 502 Bot.
2×61-5E 500 Top
5×61-5E 500 Top
5×97-5E 500 Bot.
261-5E 401 @ 12"(-)
28×3-5E 401 @ 12" at Railing Posts
Lighting Pole
17'-0¾"
2-WE 507
3'
Sidewalk Contraction Joint 13 Spaces @ 18'-9"
13×2-WE 508
Railing Posts 49 Spaces @ 9'-4½"(+) = 459'-7"
200'-5½"

4

DESIGN — J. Fedun
TRACE — A.D.T.
CHECK — D.D. Holderman

BRIDGE NO.
IN CHARGE OF — R.W. Christie

NEW HAMPSHIRE
DEPARTMENT OF PUBLIC WORKS AND HIGHWAYS
AND
MAINE STATE HIGHWAY COMMISSION
INTERSTATE 95 BRIDGE
OVER
PISCATAQUA RIVER
BETWEEN
PORTSMOUTH, NEW HAMPSHIRE AND KITTERY, MAINE
NEW HAMPSHIRE APPROACH
DECK SLAB LAYOUT
STA. 531 + 82 TO STA. 534 + 50
SHEET 13 OF 44

HARDESTY & HANOVER
CONSULTING ENGINEERS
NEW YORK, N. Y.

129-64

B. P. R. REG. NO.	STATE	PROJECT NUMBER	SHEET NO.	TOTAL SHEETS
1	MAINE	I-95-1(22)16	14	44

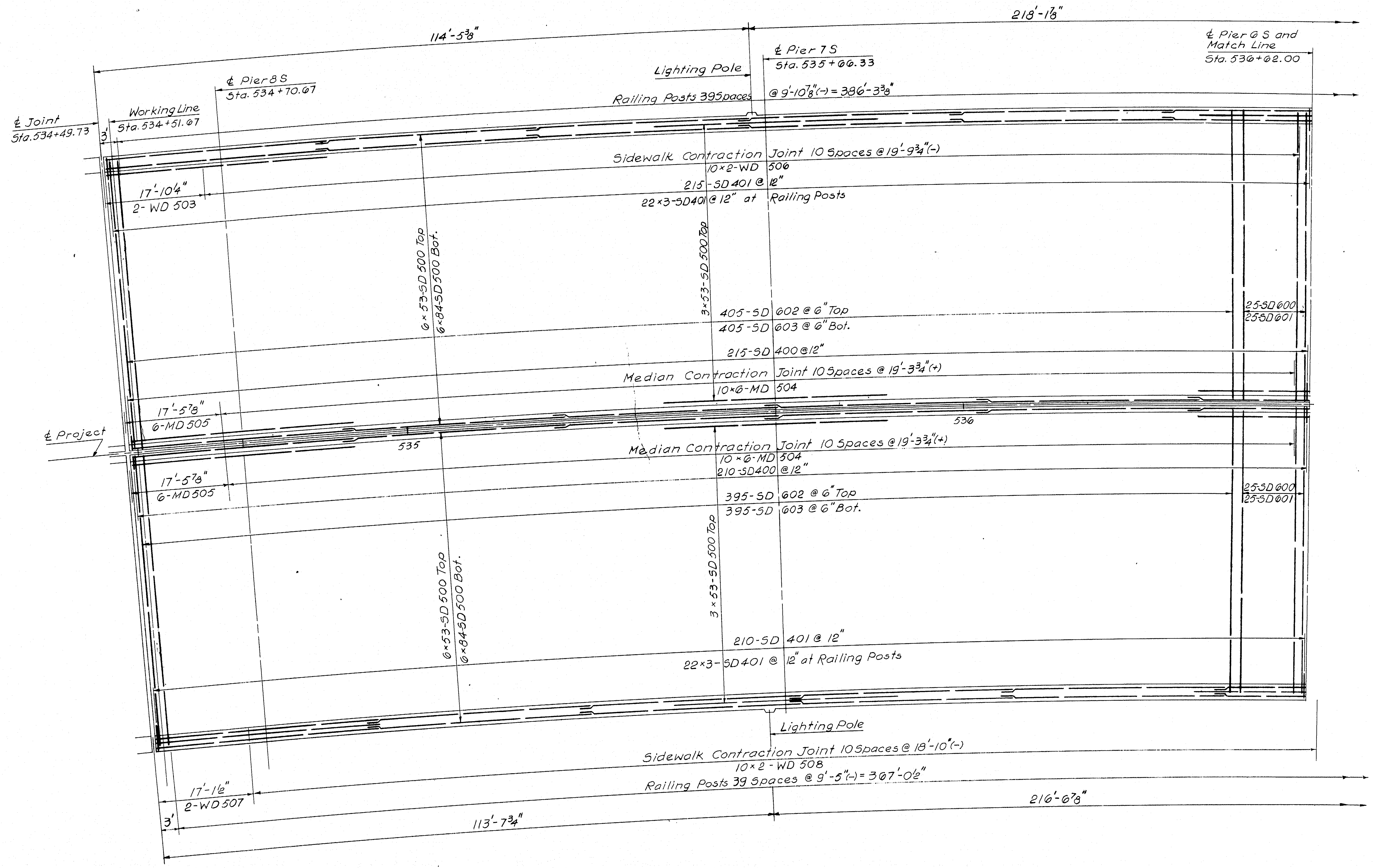

114'-5⅜"
218'-1⅞"
℄ Pier 8 S
Sta. 534+70.67
℄ Pier 7 S
Sta. 535+66.33
℄ Pier 6 S and Match Line
Sta. 536+62.00
Lighting Pole
Railing Posts 39 Spaces @ 9'-10⅞"(-) = 386'-3⅜"
℄ Joint
Sta. 534+49.73
3'
Working Line
Sta. 534+51.67
Sidewalk Contraction Joint 10 Spaces @ 19'-9¾"(-)
10×2-WD 506
17'-10¼"
2-WD 503
215-SD 401 @ 12"
22×3-SD 401 @ 12" at Railing Posts
6×53-SD 500 Top
6×84-SD 500 Bot.
3×53-SD 500 Top
405-SD 602 @ 6" Top
405-SD 603 @ 6" Bot.
25-SD 600
25-SD 601
215-SD 400 @ 12"
Median Contraction Joint 10 Spaces @ 19'-3¾"(+)
10×6-MD 504
17'-5⅞"
6-MD 505
℄ Project
535
536
Median Contraction Joint 10 Spaces @ 19'-3¾"(+)
10×6-MD 504
210-SD 400 @ 12"
17'-5⅞"
6-MD 505
395-SD 602 @ 6" Top
395-SD 603 @ 6" Bot.
25-SD 600
25-SD 601
6×53-SD 500 Top
6×84-SD 500 Bot.
3×53-SD 500 Top
210-SD 401 @ 12"
22×3-SD 401 @ 12" at Railing Posts
Lighting Pole
Sidewalk Contraction Joint 10 Spaces @ 18'-10"(-)
10×2-WD 508
17'-1½"
2-WD 507
Railing Posts 39 Spaces @ 9'-5"(-) = 367'-0½"
216'-6⅞"
3'
113'-7¾"

4

DESIGN — J. Fedun
TRACE — A.D.T.
CHECK — B.D. Haldeman

BRIDGE NO.
IN CHARGE OF — R.W. Christie

NEW HAMPSHIRE
DEPARTMENT OF PUBLIC WORKS AND HIGHWAYS
AND
MAINE STATE HIGHWAY COMMISSION
INTERSTATE 95 BRIDGE
OVER
PISCATAQUA RIVER
BETWEEN
PORTSMOUTH, NEW HAMPSHIRE AND KITTERY, MAINE
NEW HAMPSHIRE APPROACH
DECK SLAB LAYOUT
STA. 534 + 50 TO STA. 536 + 62
SHEET 14 OF 44

HARDESTY & HANOVER
CONSULTING ENGINEERS
NEW YORK, N. Y.

129-65

B. P. R. REG. NO.	STATE	PROJECT NUMBER	SHEET NO.	TOTAL SHEETS
1	MAINE	I-95-1(22)16	15	44

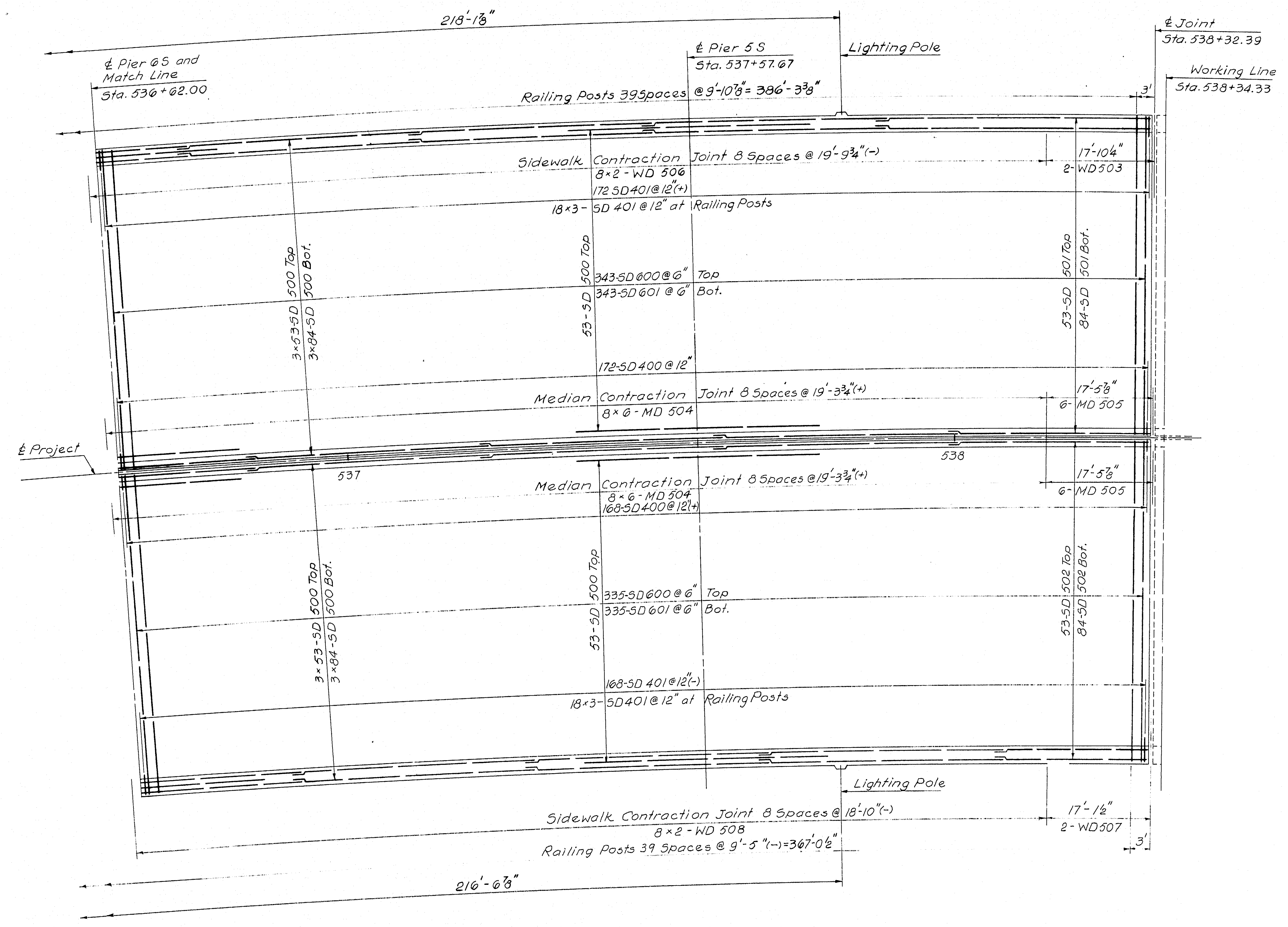
218'-1⅞"
℄ Pier 6S and Match Line
Sta. 536+62.00
℄ Pier 5S
Sta. 537+57.67
Lighting Pole
℄ Joint
Sta. 538+32.39
Working Line
Sta. 538+34.33
Railing Posts 39 Spaces @ 9'-10⅞" = 386'-3⅜"
3'
Sidewalk Contraction Joint 8 Spaces @ 19'-9¾"(-)
8×2-WD 506
172 SD401 @ 12"(+)
18×3-SD 401 @ 12" at Railing Posts
17'-10¼"
2-WD503
3×53-SD 500 Top
3×84-SD 500 Bot.
53-SD 500 Top
343-SD 600 @ 6" Top
343-SD 601 @ 6" Bot.
53-SD 501 Top
84-SD 501 Bot.
172-SD 400 @ 12"
Median Contraction Joint 8 Spaces @ 19'-3¾"(+)
8×6-MD 504
17'-5⅞"
6-MD 505
℄ Project
537
538
Median Contraction Joint 8 Spaces @ 19'-3¾"(+)
8×6-MD 504
168-SD400 @ 12"(+)
17'-5⅞"
6-MD 505
3×53-SD 500 Top
3×84-SD 500 Bot.
53-SD 500 Top
335-SD 600 @ 6" Top
335-SD 601 @ 6" Bot.
53-SD 502 Top
84-SD 502 Bot.
168-SD 401 @ 12"(-)
18×3-SD401 @ 12" at Railing Posts
Lighting Pole
Sidewalk Contraction Joint 8 Spaces @ 18'-10"(-)
8×2-WD 508
17'-1½"
2-WD507
Railing Posts 39 Spaces @ 9'-5"(-) = 367'-0½"
3'
216'-6⅞"

4

DESIGN — J. Fedum
TRACE — A.D.T.
CHECK — D.D. Holderman

BRIDGE NO.
IN CHARGE OF — R.W. Christi

NEW HAMPSHIRE
DEPARTMENT OF PUBLIC WORKS AND HIGHWAYS
AND
MAINE STATE HIGHWAY COMMISSION
INTERSTATE 95 BRIDGE
OVER
PISCATAQUA RIVER
BETWEEN
PORTSMOUTH, NEW HAMPSHIRE AND KITTERY, MAINE
NEW HAMPSHIRE APPROACH
DECK SLAB LAYOUT
STA. 536+62 TO STA. 538+33
SHEET 15 OF 44

HARDESTY & HANOVER
CONSULTING ENGINEERS
NEW YORK, N. Y.

129-66

B. P. R. REG. NO.	STATE	PROJECT NUMBER	SHEET NO.	TOTAL SHEETS
1	MAINE	I-95-1(22)16	16	44

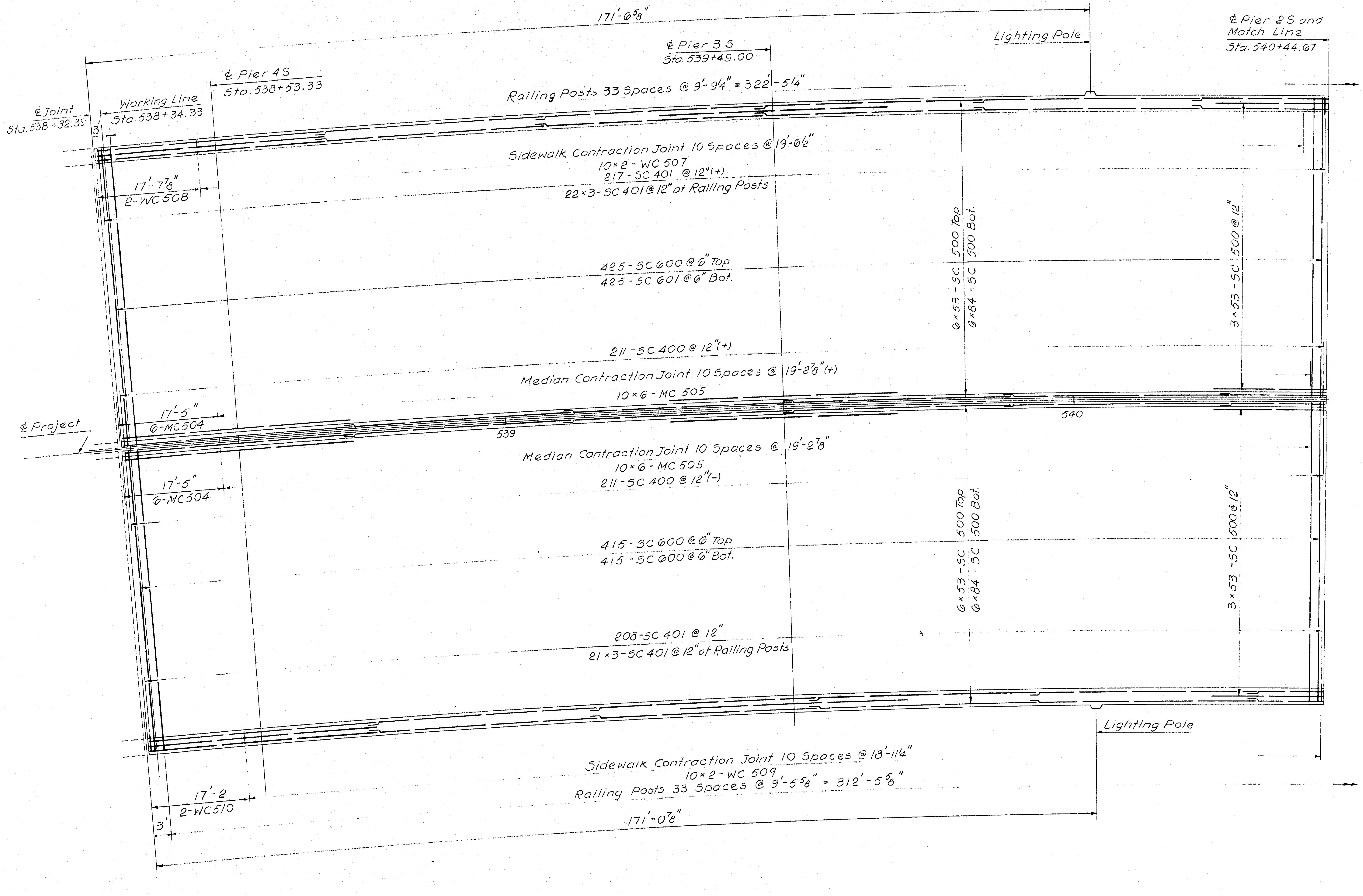
171'-6 5/8"
℄ Pier 3 S
Sta. 539+49.00
Lighting Pole
℄ Pier 2 S and
Match Line
Sta. 540+44.67
℄ Pier 4 S
Sta. 538+53.33
Railing Posts 33 Spaces @ 9'-9 1/4" = 322'-5 1/4"
℄ Joint
Sta. 538+32.39
Working Line
Sta. 538+34.33
3'
Sidewalk Contraction Joint 10 Spaces @ 19'-6 1/2"
10×2 - WC 507
217 - SC 401 @ 12"(+)
22×3-SC 401 @ 12" at Railing Posts
17'-7 7/8"
2-WC 508
425 - SC 600 @ 6" Top
425 - SC 601 @ 6" Bot.
6×53 - SC 500 Top
6×84 - SC 500 Bot.
3×53 - SC 500 @ 12"
211 - SC 400 @ 12"(+)
Median Contraction Joint 10 Spaces @ 19'-2 7/8"(+)
10×6 - MC 505
17'-5"
6-MC 504
℄ Project
539
540
Median Contraction Joint 10 Spaces @ 19'-2 7/8"
10×6 - MC 505
211 - SC 400 @ 12"(-)
17'-5"
6-MC 504
415 - SC 600 @ 6" Top
415 - SC 600 @ 6" Bot.
6×53 - SC 500 Top
6×84 - SC 500 Bot.
3×53 - SC 500 @ 12"
208-SC 401 @ 12"
21×3-SC 401 @ 12" at Railing Posts
Lighting Pole
Sidewalk Contraction Joint 10 Spaces @ 18'-11 1/4"
10×2 - WC 509
Railing Posts 33 Spaces @ 9'-5 5/8" = 312'-5 5/8"
17'-2
2-WC 510
3'
171'-0 7/8"

4

DESIGN — J. Fedun
TRACE — A.D.T.
CHECK — D. D. Halabunar

BRIDGE NO.
IN CHARGE OF — R. W. Christie

NEW HAMPSHIRE
DEPARTMENT OF PUBLIC WORKS AND HIGHWAYS
AND
MAINE STATE HIGHWAY COMMISSION
INTERSTATE 95 BRIDGE
OVER
PISCATAQUA RIVER
BETWEEN
PORTSMOUTH, NEW HAMPSHIRE AND KITTERY, MAINE
NEW HAMPSHIRE APPROACH
DECK SLAB LAYOUT
STA. 538 + 33 TO STA. 540 + 45
SHEET 16 OF 44

HARDESTY & HANOVER
CONSULTING ENGINEERS
NEW YORK, N. Y.

129-67

B. P. R. REG. NO.	STATE	PROJECT NUMBER	SHEET NO.	TOTAL SHEETS
1	MAINE	I—95—1(22)16	17	44

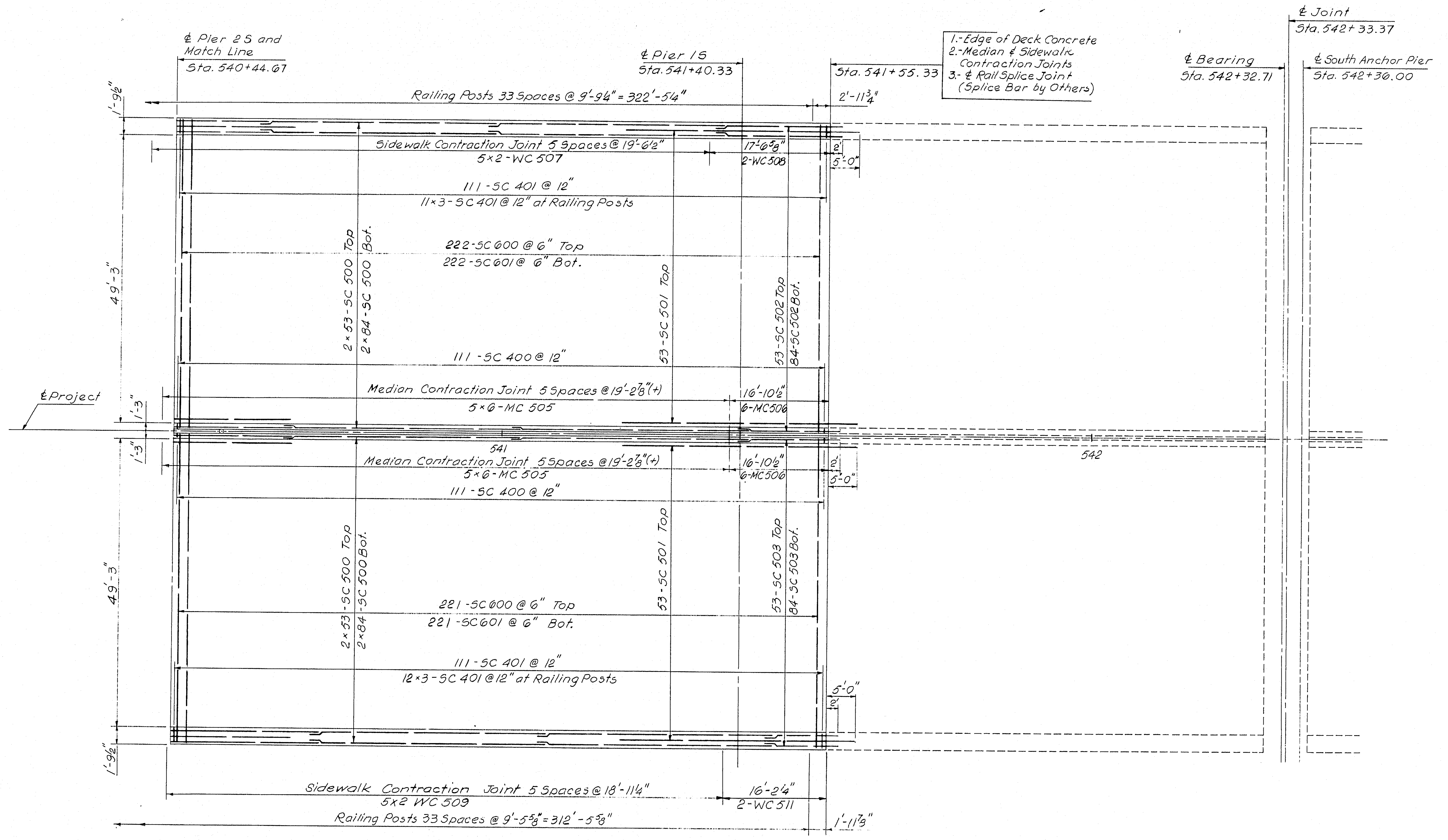

₵ Pier 2S and
Match Line
Sta. 540+44.67
₵ Pier 1S
Sta. 541+40.33
Sta. 541+55.33
1.-Edge of Deck Concrete
2.-Median ₵ Sidewalk Contraction Joints
3.-₵ Rail Splice Joint (Splice Bar by Others)
₵ Bearing
Sta. 542+32.71
₵ Joint
Sta. 542+33.37
₵ South Anchor Pier
Sta. 542+30.00
Railing Posts 33 Spaces @ 9'-9¼" = 322'-5¼"
2'-11¾"
1'-9½"
Sidewalk Contraction Joint 5 Spaces @ 19'-6½"
5×2-WC 507
17'-6⅝"
2-WC 508
2'
5'-0"
111-SC 401 @ 12"
11×3-SC 401 @ 12" at Railing Posts
2×53-SC 500 Top
2×84-SC 500 Bot.
222-SC 600 @ 6" Top
222-SC 601 @ 6" Bot.
53-SC 501 Top
53-SC 502 Top
84-SC 502 Bot.
49'-3"
111-SC 400 @ 12"
₵ Project
1'-3"
Median Contraction Joint 5 Spaces @ 19'-2⅞"(+)
5×6-MC 505
16'-10½"
6-MC 506
541
542
1'-3"
Median Contraction Joint 5 Spaces @ 19'-2⅞"(+)
5×6-MC 505
16'-10½"
6-MC 506
2'
5'-0"
111-SC 400 @ 12"
2×53-SC 500 Top
2×84-SC 500 Bot.
53-SC 501 Top
53-SC 503 Top
84-SC 503 Bot.
49'-3"
221-SC 600 @ 6" Top
221-SC 601 @ 6" Bot.
111-SC 401 @ 12"
12×3-SC 401 @ 12" at Railing Posts
5'-0"
2'
1'-9½"
Sidewalk Contraction Joint 5 Spaces @ 18'-11¼"
5×2 WC 509
16'-2¼"
2-WC 511
Railing Posts 33 Spaces @ 9'-5⅝" = 312'-5⅝"
1'-11⅞"

NOTE:

Ends of Bars to be left exposed shall be hot-dip zinc coated to a length one foot greater than the exposed length.

4

DESIGN — J. Fedun
TRACE — A.D.T.
CHECK — D.D. Holdeman

BRIDGE NO.
IN CHARGE OF — R.W. Christie

NEW HAMPSHIRE
DEPARTMENT OF PUBLIC WORKS AND HIGHWAYS
AND
MAINE STATE HIGHWAY COMMISSION
INTERSTATE 95 BRIDGE
OVER
PISCATAQUA RIVER
BETWEEN
PORTSMOUTH, NEW HAMPSHIRE AND KITTERY, MAINE
NEW HAMPSHIRE APPROACH
DECK SLAB LAYOUT
STA. 540 + 45 TO STA. 542 + 32
SHEET 17 OF 44

HARDESTY & HANOVER
CONSULTING ENGINEERS
NEW YORK, N. Y.

129-68

B. P. R. REG. NO.	STATE	PROJECT NUMBER	SHEET NO.	TOTAL SHEETS
1	MAINE	I-95-1(22)16	18	44

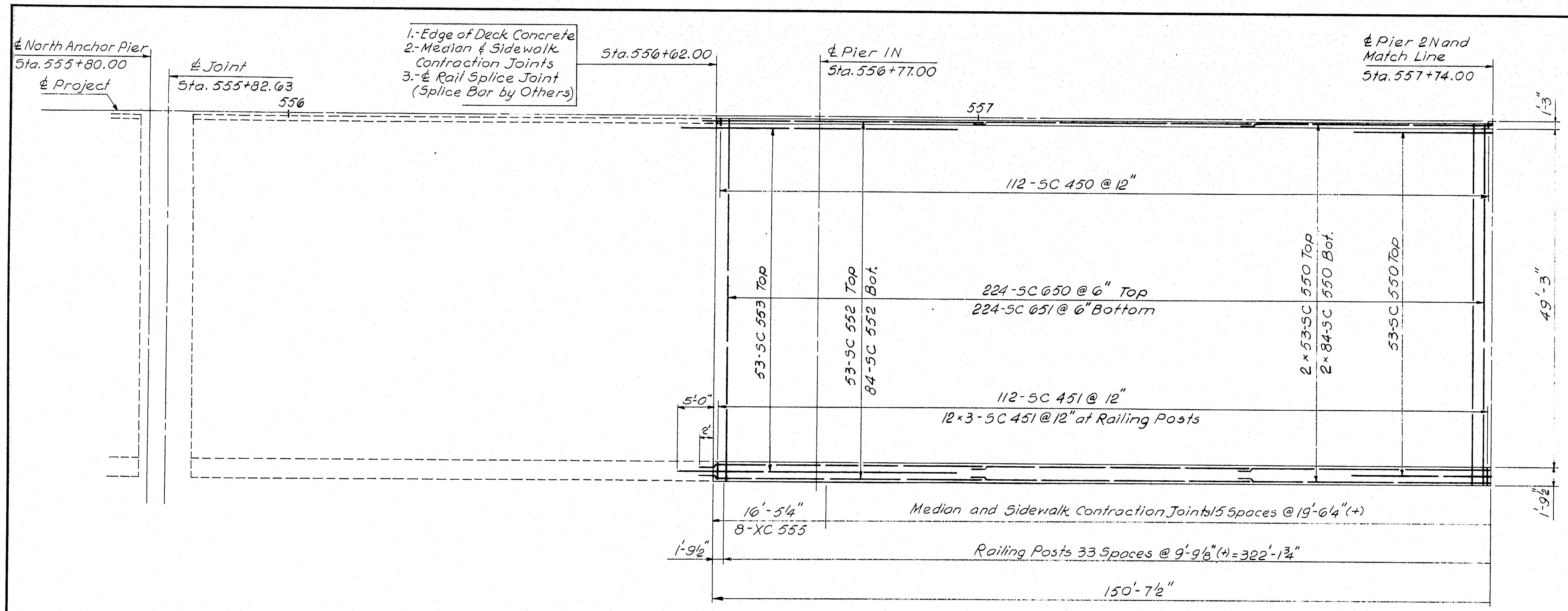

℄ North Anchor Pier
Sta. 555+80.00
℄ Project
℄ Joint
Sta. 555+82.63
556
1.-Edge of Deck Concrete
2.-Median & Sidewalk Contraction Joints
3.-℄ Rail Splice Joint (Splice Bar by Others)
Sta. 556+62.00
℄ Pier 1N
Sta. 556+77.00
557
℄ Pier 2N and Match Line
Sta. 557+74.00
1'-3"
112-5C 450 @ 12"
53-5C 553 Top
53-5C 552 Top
84-5C 552 Bot.
224-5C 650 @ 6" Top
224-5C 651 @ 6" Bottom
2×53-5C 550 Top
2×84-5C 550 Bot.
53-5C 550 Top
49'-3"
5'-0"
2'
112-5C 451 @ 12"
12×3-5C 451 @ 12" at Railing Posts
1'-9½"
16'-5¼"
8-XC 555
Median and Sidewalk Contraction Joints 15 Spaces @ 19'-6¼"(+)
1'-9½"
Railing Posts 33 Spaces @ 9'-9⅛"(+) = 322'-1¾"
150'-7½"

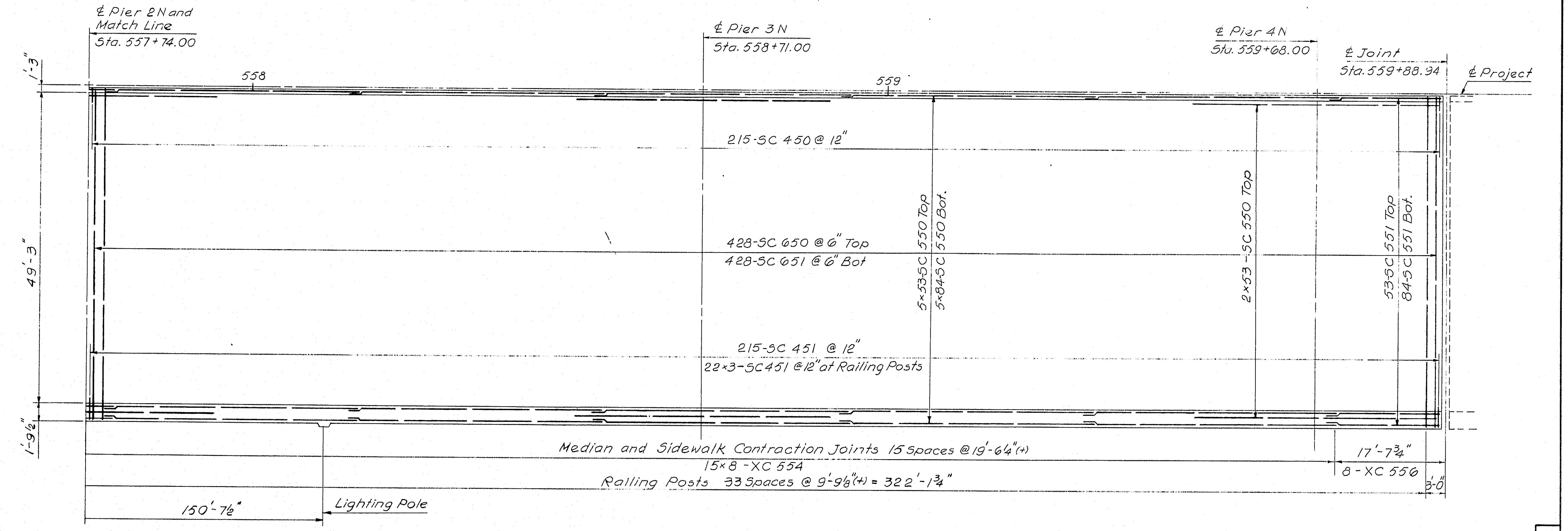

℄ Pier 2N and Match Line
Sta. 557+74.00
℄ Pier 3N
Sta. 558+71.00
℄ Pier 4N
Sta. 559+68.00
℄ Joint
Sta. 559+88.94
℄ Project
1'-3"
558
559
215-5C 450 @ 12"
49'-3"
428-5C 650 @ 6" Top
428-5C 651 @ 6" Bot
5×53-5C 550 Top
5×84-5C 550 Bot.
2×53-5C 550 Top
53-5C 551 Top
84-5C 551 Bot.
215-5C 451 @ 12"
22×3-5C 451 @ 12" at Railing Posts
1'-9½"
Median and Sidewalk Contraction Joints 15 Spaces @ 19'-6¼"(+)
15×8-XC 554
17'-7¾"
8-XC 556
Railing Posts 33 Spaces @ 9'-9⅛"(+) = 322'-1¾"
3'-0"
150'-7½"
Lighting Pole

4

DESIGN – J. Fedun
TRACE – A.D.T.
CHECK – D.D. Holaiwa

BRIDGE NO.
IN CHARGE OF – R. W. Christi

NEW HAMPSHIRE
DEPARTMENT OF PUBLIC WORKS AND HIGHWAYS
AND
MAINE STATE HIGHWAY COMMISSION
INTERSTATE 95 BRIDGE
OVER
PISCATAQUA RIVER
BETWEEN
PORTSMOUTH, NEW HAMPSHIRE AND KITTERY, MAINE

MAINE APPROACH
DECK SLAB LAYOUT
STA. 555 + 84 TO STA. 559 + 89
SHEET 18 OF 44

HARDESTY & HANOVER
CONSULTING ENGINEERS
NEW YORK, N. Y.

129-69

B. P. R. REG. NO.	STATE	PROJECT NUMBER	SHEET NO.	TOTAL SHEETS
1	MAINE	I-95-1(22)16	19	44

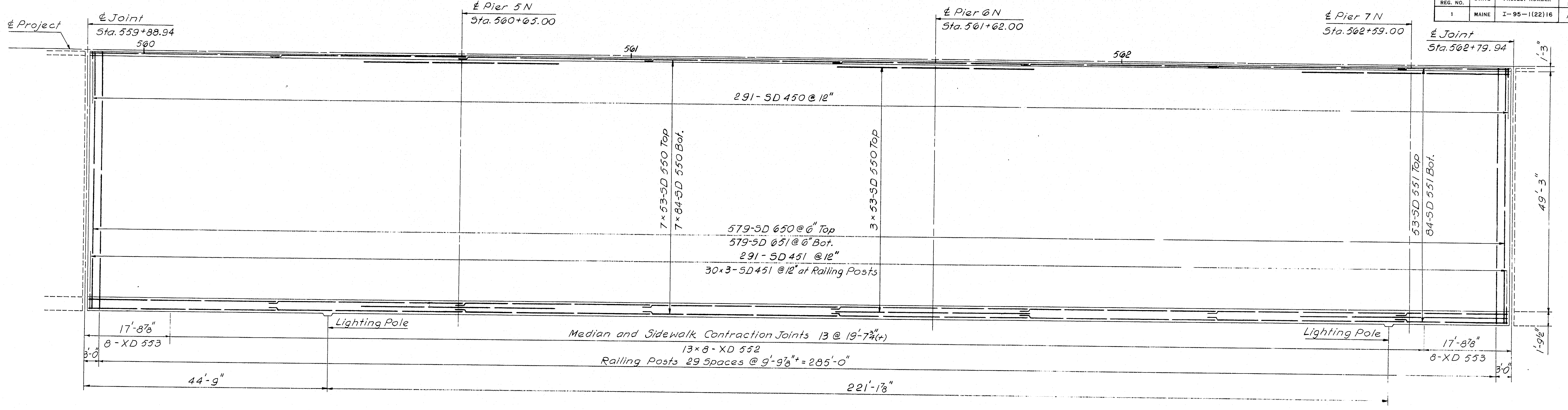

℄ Project
℄ Joint
Sta. 559+88.94
560
℄ Pier 5N
Sta. 560+65.00
561
℄ Pier 6N
Sta. 561+62.00
562
℄ Pier 7N
Sta. 562+59.00
℄ Joint
Sta. 562+79.94
1'-3"
291-5D 450 @ 12"
7×53-5D 550 Top
7×84-5D 550 Bot.
3×53-5D 550 Top
53-5D 551 Top
84-5D 551 Bot.
49'-3"
579-5D 650 @ 6" Top
579-5D 651 @ 6" Bot.
291-5D 451 @ 12"
30×3-5D451 @ 12" at Railing Posts
Lighting Pole
Lighting Pole
1'-9½"
17'-8⅞"
8-XD 553
3'-0"
Median and Sidewalk Contraction Joints 13 @ 19'-7¾"(+)
13×8-XD 552
Railing Posts 29 Spaces @ 9'-9⅞"+ = 285'-0"
17'-8⅞"
8-XD 553
3'-0"
44'-9"
221'-1⅞"

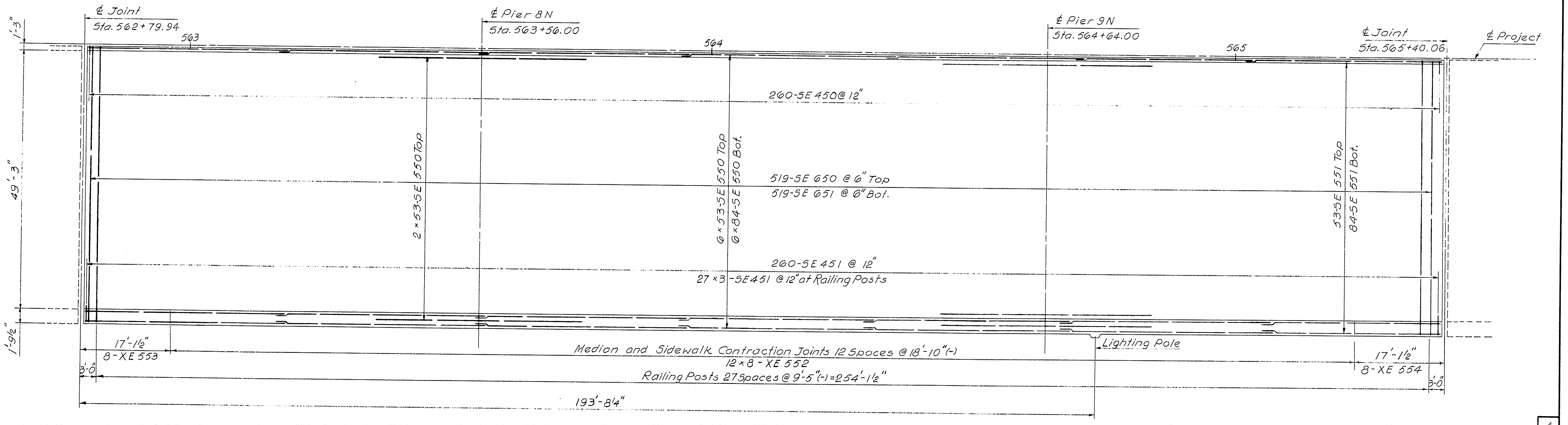

℄ Joint
Sta. 562+79.94
563
℄ Pier 8N
Sta. 563+56.00
564
℄ Pier 9N
Sta. 564+64.00
565
℄ Joint
Sta. 565+40.06
℄ Project
1'-3"
260-5E 450 @ 12"
2×53-5E 550 Top
6×53-5E 550 Top
6×84-5E 550 Bot.
53-5E 551 Top
84-5E 551 Bot.
49'-3"
519-5E 650 @ 6" Top
519-5E 651 @ 6" Bot.
260-5E 451 @ 12"
27×3-5E451 @ 12" at Railing Posts
1'-9½"
17'-1½"
8-XE 553
3'-0"
Median and Sidewalk Contraction Joints 12 Spaces @ 18'-10"(-)
12×8-XE 552
Railing Posts 27 Spaces @ 9'-5"(-) = 254'-1½"
Lighting Pole
17'-1½"
8-XE 554
3'-0"
193'-8¼"

4

DESIGN – J. Fedun
TRACE – A.D.T.
CHECK – D. D. Holderman

BRIDGE NO.
IN CHARGE OF – R. W. Christie

NEW HAMPSHIRE
DEPARTMENT OF PUBLIC WORKS AND HIGHWAYS
AND
MAINE STATE HIGHWAY COMMISSION

INTERSTATE 95 BRIDGE
OVER
PISCATAQUA RIVER
BETWEEN
PORTSMOUTH, NEW HAMPSHIRE AND KITTERY, MAINE

MAINE APPROACH

DECK SLAB LAYOUT
STA. 559 + 89 TO STA. 565 + 44

SHEET 19 OF 44

HARDESTY & HANOVER
CONSULTING ENGINEERS
NEW YORK, N. Y.

129-70

B. P. R. REG. NO.	STATE	PROJECT NUMBER	SHEET NO.	TOTAL SHEETS
1	MAINE	I-95-1 (22)16	20	44

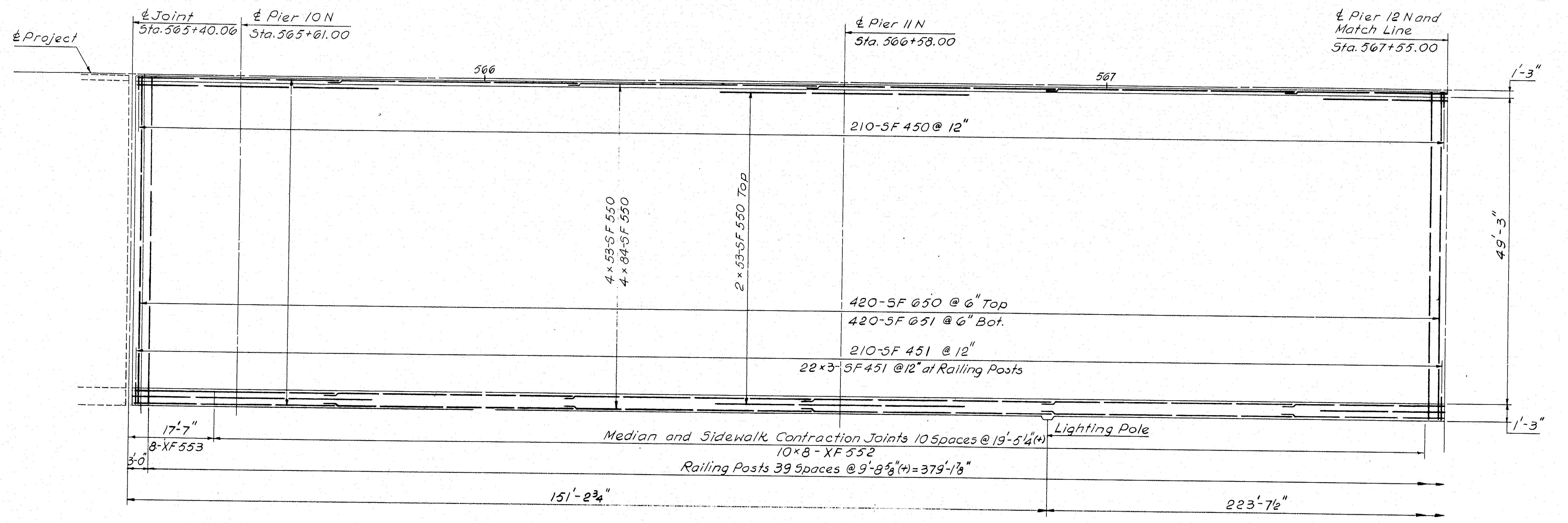

℄ Project
℄ Joint
Sta. 565+40.06
℄ Pier 10 N
Sta. 565+61.00
℄ Pier 11 N
Sta. 566+58.00
℄ Pier 12 N and Match Line
Sta. 567+55.00
566
567
1'-3"
210-5F 450 @ 12"
4 × 53-5F 550
4 × 84-5F 550
2 × 53-5F 550 Top
49'-3"
420-5F 650 @ 6" Top
420-5F 651 @ 6" Bot.
210-5F 451 @ 12"
22 × 3-5F 451 @12" at Railing Posts
1'-3"
17'-7"
8-XF 553
3'-0"
Median and Sidewalk Contraction Joints 10 Spaces @ 19'-5¼"(+)
Lighting Pole
10 × 8 - XF 552
Railing Posts 39 Spaces @ 9'-8⅝"(+) = 379'-1⅞"
151'-2¾"
223'-7½"

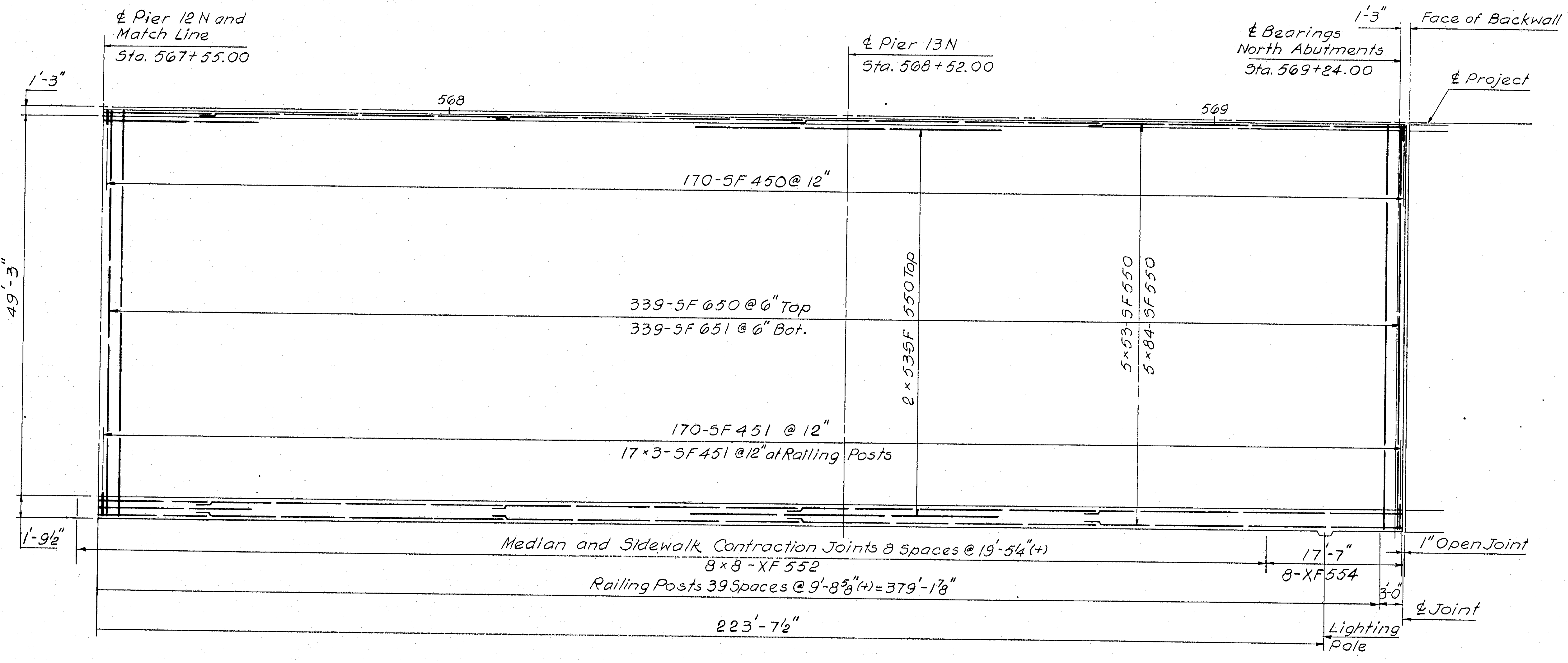

℄ Pier 12 N and Match Line
Sta. 567+55.00
℄ Pier 13 N
Sta. 568+52.00
℄ Bearings North Abutments
Sta. 569+24.00
1'-3"
Face of Backwall
℄ Project
1'-3"
568
569
170-5F 450 @ 12"
49'-3"
339-5F 650 @ 6" Top
339-5F 651 @ 6" Bot.
2 × 53-5F 550 Top
5 × 53-5F 550
5 × 84-5F 550
170-5F 451 @ 12"
17 × 3-5F 451 @12" at Railing Posts
1'-9½"
Median and Sidewalk Contraction Joints 8 Spaces @ 19'-5¼"(+)
17'-7"
1" Open Joint
8 × 8 - XF 552
8-XF 554
Railing Posts 39 Spaces @ 9'-8⅝"(+) = 379'-1⅞"
3'-0"
℄ Joint
223'-7½"
Lighting Pole

4

DESIGN — J. Fedun
TRACE — A.D.T.
CHECK — D.D. Hobbeman

BRIDGE NO.
IN CHARGE OF — R.W. Christie

NEW HAMPSHIRE
DEPARTMENT OF PUBLIC WORKS AND HIGHWAYS
AND
MAINE STATE HIGHWAY COMMISSION

INTERSTATE 95 BRIDGE
OVER
PISCATAQUA RIVER
BETWEEN
PORTSMOUTH, NEW HAMPSHIRE AND KITTERY, MAINE

MAINE APPROACH

DECK SLAB LAYOUT
STA. 565 + 44 TO STA. 569 + 25

SHEET 20 OF 44

HARDESTY & HANOVER
CONSULTING ENGINEERS
NEW YORK, N. Y.

129-71

B.P.R. REG. NO.	STATE	PROJECT NUMBER	SHEET NO.	TOTAL SHEETS
1	MAINE	I-95-1(22)16	21	44

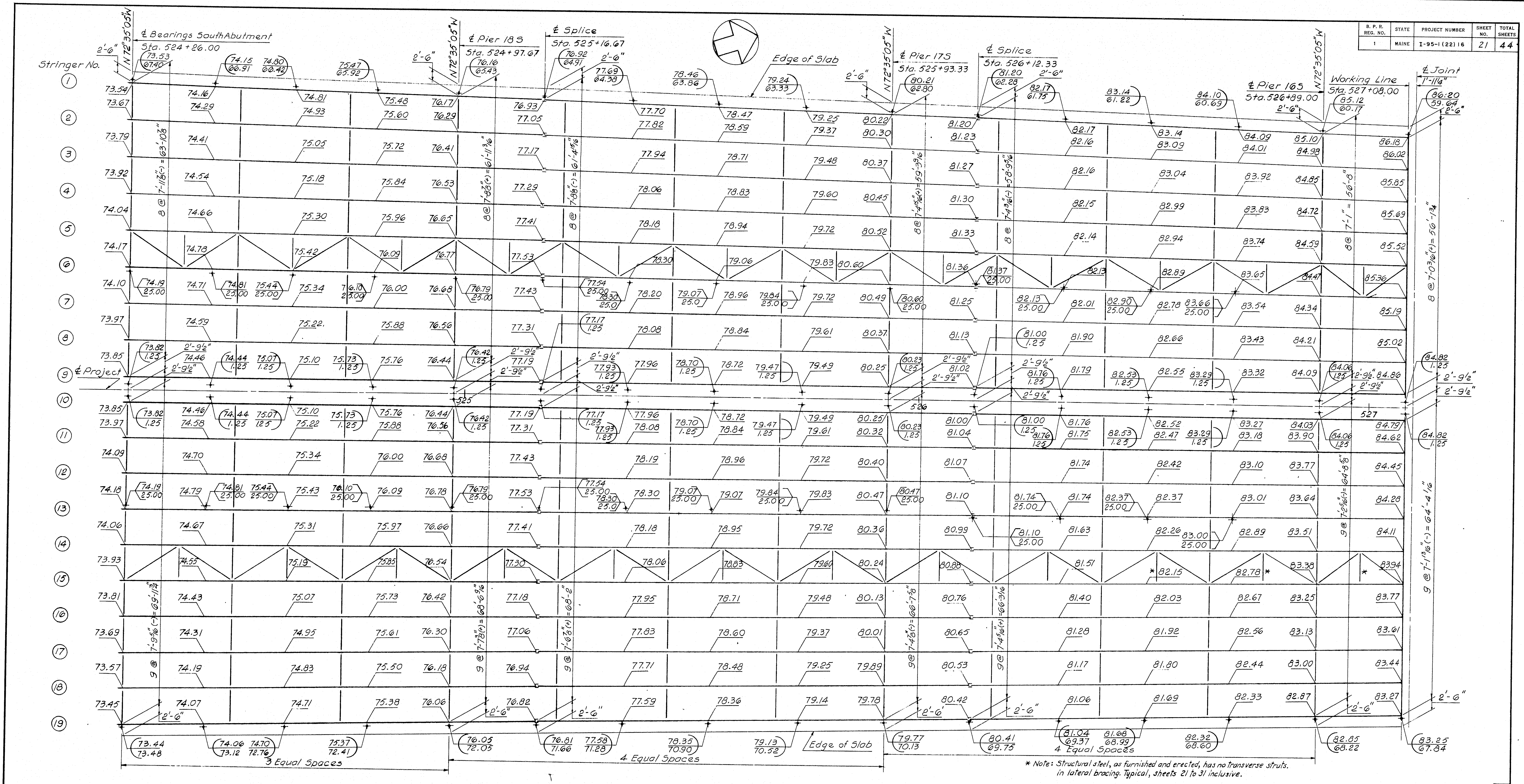

℄ Bearings South Abutment
Sta. 524+26.00
N72°35'05"W
℄ Pier 18S
Sta. 524+97.67
℄ Splice
Sta. 525+16.67
Edge of Slab
℄ Pier 17S
Sta. 525+93.33
℄ Splice
Sta. 526+12.33
℄ Pier 16S
Sta. 526+89.00
Working Line
Sta. 527+08.00
℄ Joint
1'-1¼"
Stringer No.
1
2
3
4
5
6
7
8
9
10
11
12
13
14
15
16
17
18
19
℄ Project
2'-6"
2'-9½"
525
526
527
8 @ 7'-11⅛"(-) = 63'-10⅞"
8 @ 7'-8⅜"(+) = 61'-1⅝"
8 @ 7'-8⅛"(-) = 61'-4⅞"
8 @ 7'-4⅝"(+) = 59'-9⅞"
8 @ 7'-4⅝"(+) = 58'-9⅞"
8 @ 7'-1" = 56'-8"
8 @ 7'-0⅜"(+) = 56'-1¾"
9 @ 7'-9⅝"(-) = 69'-11¼"
9 @ 7'-7⅝"(+) = 68'-9⅝"
9 @ 7'-6⅝"(-) = 68'-2"
9 @ 7'-4⅝"(-) = 66'-7⅝"
9 @ 7'-4⅝"(-) = 66'-3⅝"
9 @ 7'-2⅝"(-) = 64'-8⅝"
9 @ 7'-1¹³⁄₁₆"(-) = 64'-4⅛"
3 Equal Spaces
4 Equal Spaces
4 Equal Spaces
Edge of Slab

* Note: Structural steel, as furnished and erected, has no transverse struts in lateral bracing. Typical, sheets 21 to 31 inclusive.

NOTE:

Elevations given are for top of wearing surface. Vertical distance from top of wearing surface to to top of stringer web is 1'-1", (theoretical distance, not for setting forms)

Elevations are given for 5th points of stringer spans except in spans adjacent to abutments, where elevations are given for 4th points.

NOTE: STRUCTURAL STEEL NOT PART OF THIS CONTRACT. FRAMING PLANS ARE FURNISHED HEREIN SOLELY TO PROVIDE DECK ELEVATIONS.

LEGEND:

81.04 — Gutter Elevation
69.34 — Gutter Offset

81.74 — High Point Elevation
25.00 — High Point Offset

HARDESTY & HANOVER
CONSULTING ENGINEERS
NEW YORK, N.Y.

4

DESIGN — A.K.M.
TRACE — A.D.T.
CHECK — B.R. A.M.R.
BRIDGE NO. IN CHARGE OF — R.W. Christie

NEW HAMPSHIRE
DEPARTMENT OF PUBLIC WORKS AND HIGHWAYS
AND
MAINE STATE HIGHWAY COMMISSION
INTERSTATE 95 BRIDGE
OVER
PISCATAQUA RIVER
BETWEEN
PORTSMOUTH, NEW HAMPSHIRE AND KITTERY, MAINE
NEW HAMPSHIRE APPROACH
FRAMING PLAN
STA. 524+26 TO STA. 527+10
SHEET 21 OF 44

129-72

B. P. R. REG. NO.	STATE	PROJECT NUMBER	SHEET NO.	TOTAL SHEETS
1	MAINE	I-95-1 (22) 16	22	44

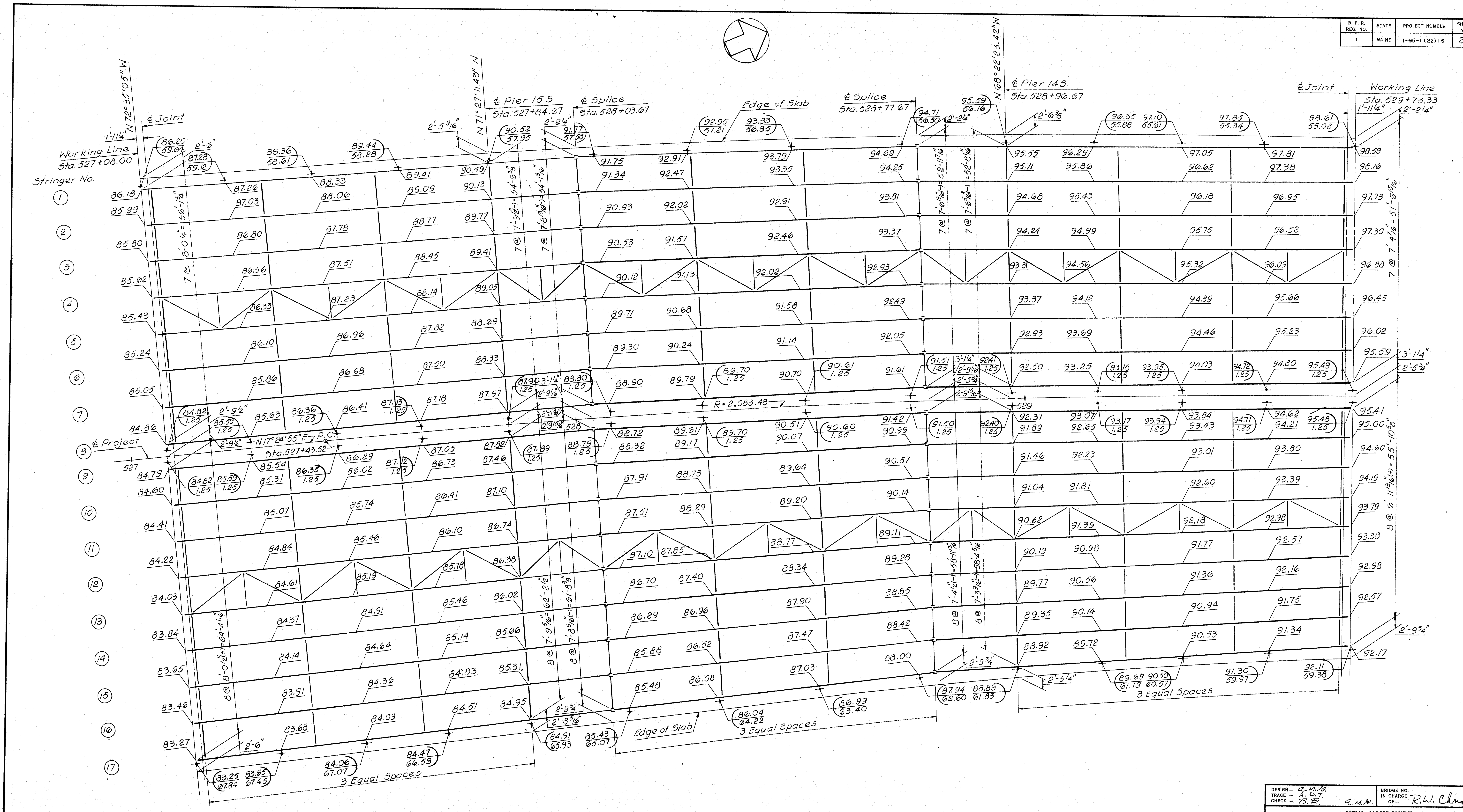

Working Line
Sta. 527+08.00
℄ Joint
N 72°35'05" W
Stringer No.
① ② ③ ④ ⑤ ⑥ ⑦ ⑧ ⑨ ⑩ ⑪ ⑫ ⑬ ⑭ ⑮ ⑯ ⑰
℄ Project
527
℄ Pier 15S
Sta. 527+84.67
N 71°27'11.43" W
℄ Splice
Sta. 528+03.67
Edge of Slab
℄ Splice
Sta. 528+77.67
N 68°22'23.42" W
℄ Pier 14S
Sta. 528+96.67
℄ Joint
Working Line
Sta. 529+73.33
N 17°24'55" E P.C.
Sta. 527+43.52
R = 2,083.48
528
529
3 Equal Spaces
Edge of Slab
3 Equal Spaces
3 Equal Spaces

NEW HAMPSHIRE
DEPARTMENT OF PUBLIC WORKS AND HIGHWAYS
AND
MAINE STATE HIGHWAY COMMISSION

INTERSTATE 95 BRIDGE
OVER
PISCATAQUA RIVER
BETWEEN
PORTSMOUTH, NEW HAMPSHIRE AND KITTERY, MAINE

NEW HAMPSHIRE APPROACH
FRAMING PLAN
STA. 527 + 08 TO STA. 529 + 73

SHEET 22 OF 44

DESIGN – A.M.G.
TRACE – A.D.T.
CHECK – B.R. A.M.G.

BRIDGE NO.
IN CHARGE OF – R.W. Christie

4

HARDESTY & HANOVER
CONSULTING ENGINEERS
NEW YORK, N. Y.

129-73

B. P. R. REG. NO.	STATE	PROJECT NUMBER	SHEET NO.	TOTAL SHEETS
1	MAINE	I-95-1 (22) 16	23	44

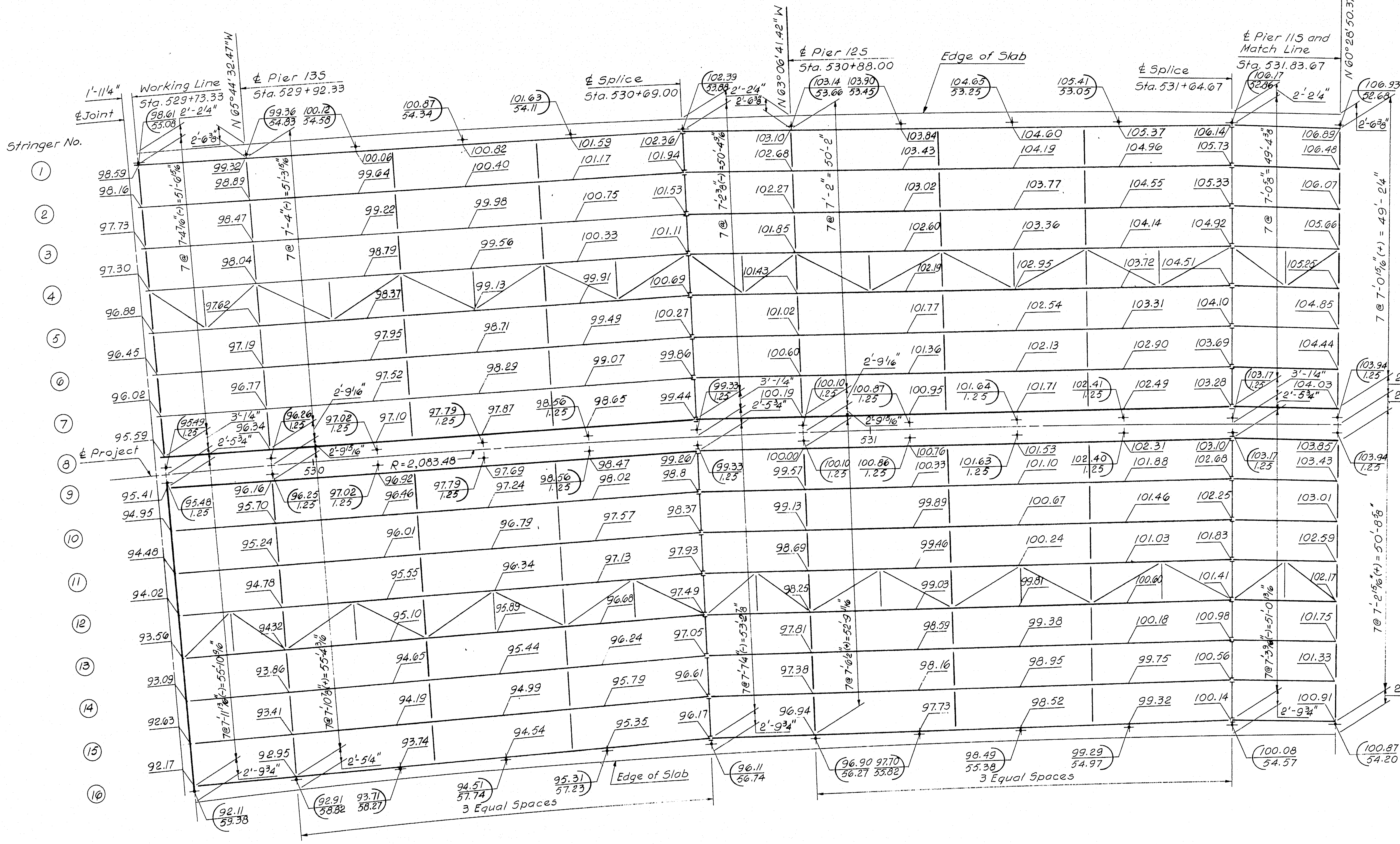
Stringer No.
1
2
3
4
5
6
7
8
9
10
11
12
13
14
15
16
1'-11¼"
℄ Joint
Working Line
Sta. 529+73.33
N 65°44'32.47"W
℄ Pier 135
Sta. 529+92.33
℄ Splice
Sta. 530+69.00
N 63°06'41.42"W
℄ Pier 125
Sta. 530+88.00
Edge of Slab
℄ Splice
Sta. 531+64.67
℄ Pier 115 and
Match Line
Sta. 531.83.67
N 60°28'50.37"W
℄ Project
R = 2,083.48
530
531
7 @ 7'-4⅞"(-) = 51'-6⅛"
7 @ 7'-4"(-) = 51'-3⅛"
7 @ 7'-2⅜"(-) = 50'-4⅝"
7 @ 7'-2" = 50'-2"
7 @ 7'-0⅝" = 49'-4⅜"
7 @ 7'-0⁹⁄₁₆"(+) = 49'-2¼"
7 @ 7'-2⁹⁄₁₆"(+) = 50'-6⅝"
7 @ 7'-11¹³⁄₁₆"(-) = 55'-10⅝"
7 @ 7'-10⅝"(+) = 55'-4⅜"
7 @ 7'-7¼"(-) = 53'-2⅞"
7 @ 7'-6¼"(+) = 52'-9⅜"
7 @ 7'-3⅜"(+) = 51'-0¹¹⁄₁₆"
2'-2¼"
2'-6¾"
2'-9¹⁵⁄₁₆"
3'-1¼"
2'-5¾"
2'-9¾"
2'-5¼"
2'-9⁵⁄₁₆"
2'-6⅞"
3 Equal Spaces
Edge of Slab
3 Equal Spaces

HARDESTY & HANOVER
CONSULTING ENGINEERS
NEW YORK, N. Y.

DESIGN – C.M.G. TRACE – A.D.T. CHECK – B.R. a.M.G.	BRIDGE NO. IN CHARGE OF – R.W. Christie

4

NEW HAMPSHIRE
DEPARTMENT OF PUBLIC WORKS AND HIGHWAYS
AND
MAINE STATE HIGHWAY COMMISSION

INTERSTATE 95 BRIDGE
OVER
PISCATAQUA RIVER
BETWEEN
PORTSMOUTH, NEW HAMPSHIRE AND KITTERY, MAINE

NEW HAMPSHIRE APPROACH

FRAMING PLAN

STA. 529 + 73 TO STA. 531 + 84

SHEET 23 OF 44

129-74

B. P. R. REG. NO.	STATE	PROJECT NUMBER	SHEET NO.	TOTAL SHEETS
1	MAINE	I-95-1(22)16	24	44

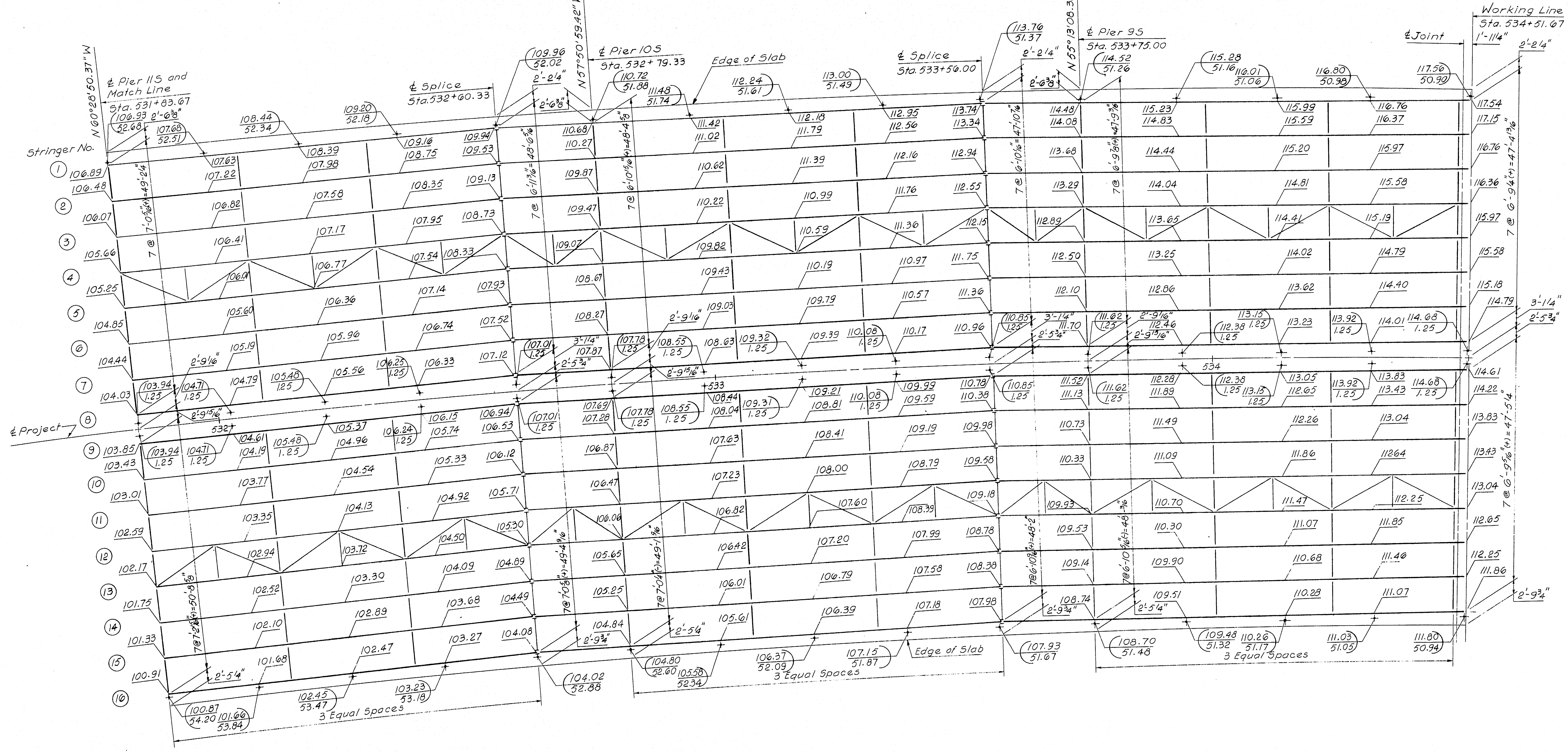

Working Line
Sta. 534+51.67
℄ Joint
℄ Pier 9S
Sta. 533+75.00
N 55°13'08.38" W
℄ Splice
Sta. 533+56.00
Edge of Slab
℄ Pier 10S
Sta. 532+79.33
N 57°50'59.42" W
℄ Splice
Sta. 532+60.33
℄ Pier 11S and
Match Line
Sta. 531+83.67
N 60°28'50.37" W
Stringer No.
1
2
3
4
5
6
7
8
9
10
11
12
13
14
15
16
℄ Project
533
532
534
3 Equal Spaces
3 Equal Spaces
3 Equal Spaces
Edge of Slab

DESIGN – E.M.G.
TRACE – A.D.T.
CHECK – B.R. E.M.G.
BRIDGE NO. 4
IN CHARGE OF – R.W. Christi

NEW HAMPSHIRE
DEPARTMENT OF PUBLIC WORKS AND HIGHWAYS
AND
MAINE STATE HIGHWAY COMMISSION
INTERSTATE 95 BRIDGE
OVER
PISCATAQUA RIVER
BETWEEN
PORTSMOUTH, NEW HAMPSHIRE AND KITTERY, MAINE
NEW HAMPSHIRE APPROACH

FRAMING PLAN
STA. 531 + 84 TO STA. 534 + 52
SHEET 24 OF 44

HARDESTY & HANOVER
CONSULTING ENGINEERS
NEW YORK, N. Y.

129-75

B. P. R. REG. NO.	STATE	PROJECT NUMBER	SHEET NO.	TOTAL SHEETS
1	MAINE	I-95-1 (22) 16	25	44

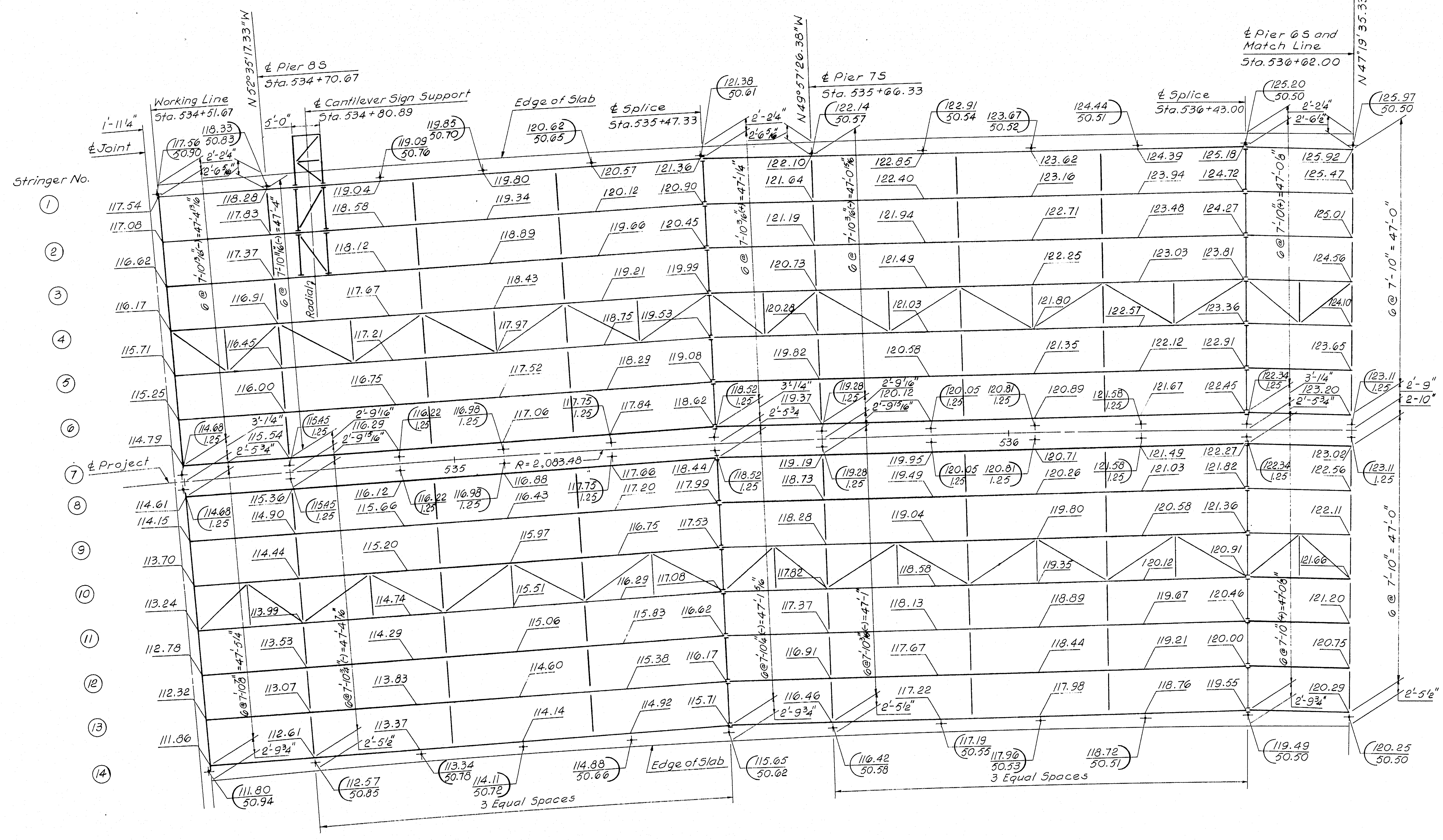

N 52° 35' 17.33" W
℄ Pier 8S
Sta. 534+70.67
℄ Cantilever Sign Support
Sta. 534+80.89
Working Line
Sta. 534+51.67
1'-11¼"
℄ Joint
5'-0"
Edge of Slab
℄ Splice
Sta. 535+47.33
N 49° 57' 26.38" W
℄ Pier 7S
Sta. 535+66.33
℄ Splice
Sta. 536+43.00
℄ Pier 6S and
Match Line
Sta. 536+62.00
N 47° 19' 35.33" W
Stringer No.
1
2
3
4
5
6
7
8
9
10
11
12
13
14
℄ Project
Radial
R = 2,083.48
535
536
6 @ 7'-10" = 47'-0"
6 @ 7'-10" = 47'-0"
2'-2¼"
2'-6½"
3'-1¼"
2'-5¾"
2'-9¹⁄₁₆"
2'-9¹³⁄₁₆"
2'-9¾"
2'-5½"
2'-9"
2'-10"
Edge of Slab
3 Equal Spaces
3 Equal Spaces
117.54
117.08
116.62
116.17
115.71
115.25
114.79
114.61
114.15
113.70
113.24
112.78
112.32
111.86
111.80
50.94
125.97
50.50
120.25
50.50

4

DESIGN – a.M.G.	BRIDGE NO.
TRACE – A.D.T.	IN CHARGE OF – R.W. Christie
CHECK – B.R. a.M.G.	

NEW HAMPSHIRE
DEPARTMENT OF PUBLIC WORKS AND HIGHWAYS
AND
MAINE STATE HIGHWAY COMMISSION
INTERSTATE 95 BRIDGE
OVER
PISCATAQUA RIVER
BETWEEN
PORTSMOUTH, NEW HAMPSHIRE AND KITTERY, MAINE

NEW HAMPSHIRE APPROACH

FRAMING PLAN

STA. 534 + 52 TO STA. 536 + 62

SHEET 25 OF 44

HARDESTY & HANOVER
CONSULTING ENGINEERS
NEW YORK, N. Y.

129-76

B. P. R. REG. NO.	STATE	PROJECT NUMBER	SHEET NO.	TOTAL SHEETS
1	MAINE	I-95-1(22)16	26	44

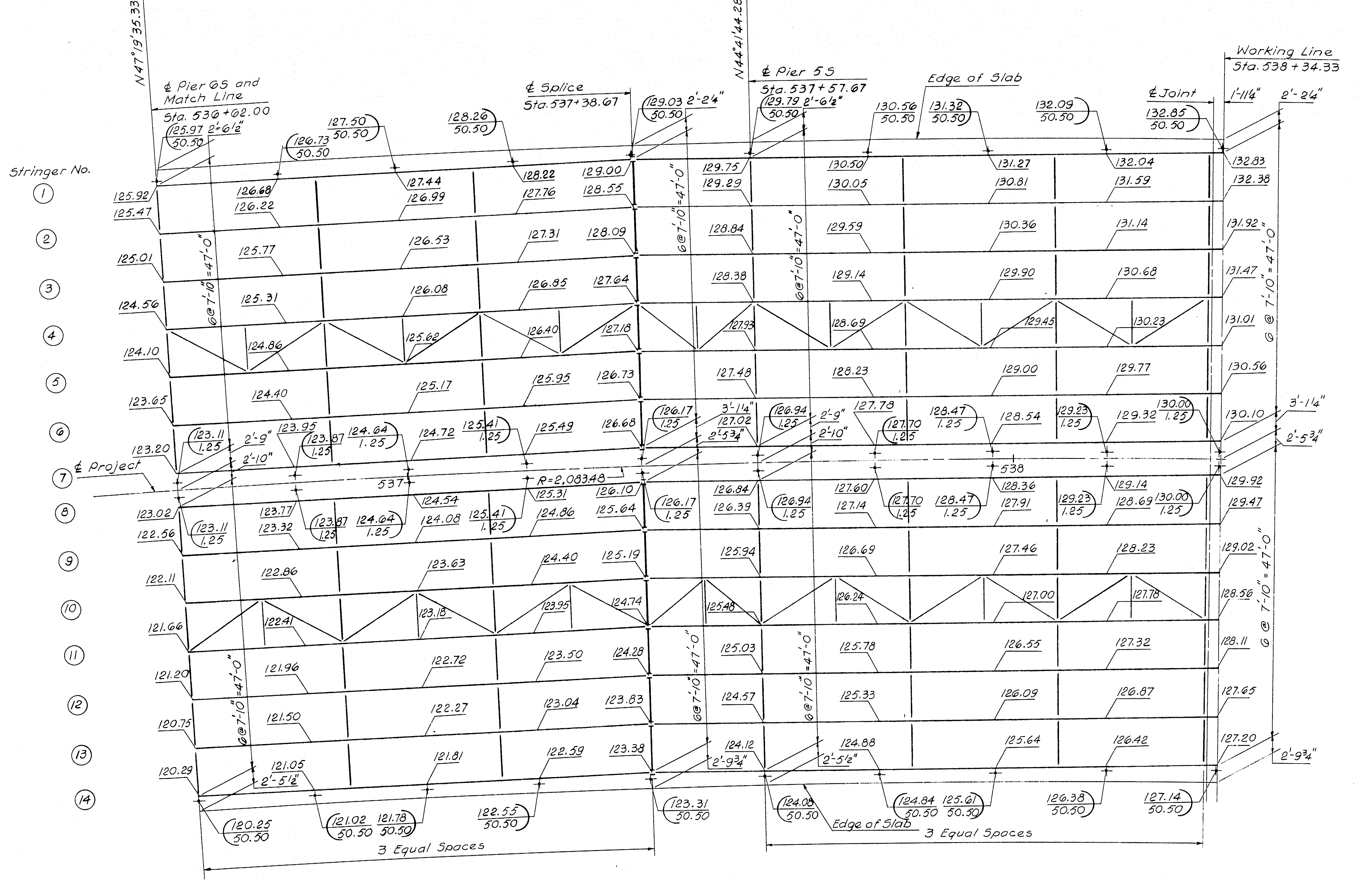

N47°19'35.33"W
℄ Pier 6S and Match Line
Sta. 536+62.00
℄ Splice
Sta. 537+38.67
N44°41'44.28"W
℄ Pier 5S
Sta. 537+57.67
Edge of Slab
℄ Joint
Working Line
Sta. 538+34.33
Stringer No.
1
2
3
4
5
6
7
8
9
10
11
12
13
14
℄ Project
537
538
R=2,083.48
6@7'-10"=47'-0"
2'-6½"
2'-2¼"
1'-11¼"
3'-1¼"
2'-5¾"
2'-9"
2'-10"
2'-9¾"
2'-5½"
50.50
1.25
Edge of Slab
3 Equal Spaces
3 Equal Spaces

DESIGN – a. M. G.
TRACE – A. D. T.
CHECK – B. R. a. M. G.

BRIDGE NO.
IN CHARGE OF – R. W. Christie

4

HARDESTY & HANOVER
CONSULTING ENGINEERS
NEW YORK, N. Y.

NEW HAMPSHIRE
DEPARTMENT OF PUBLIC WORKS AND HIGHWAYS
AND
MAINE STATE HIGHWAY COMMISSION
INTERSTATE 95 BRIDGE
OVER
PISCATAQUA RIVER
BETWEEN
PORTSMOUTH, NEW HAMPSHIRE AND KITTERY, MAINE
NEW HAMPSHIRE APPROACH

FRAMING PLAN

STA. 536 + 62 TO STA. 538 + 34

SHEET 26 OF 44

129-77

B. P. R. REG. NO.	STATE	PROJECT NUMBER	SHEET NO.	TOTAL SHEETS
1	MAINE	I-95-1(22)16	27	44

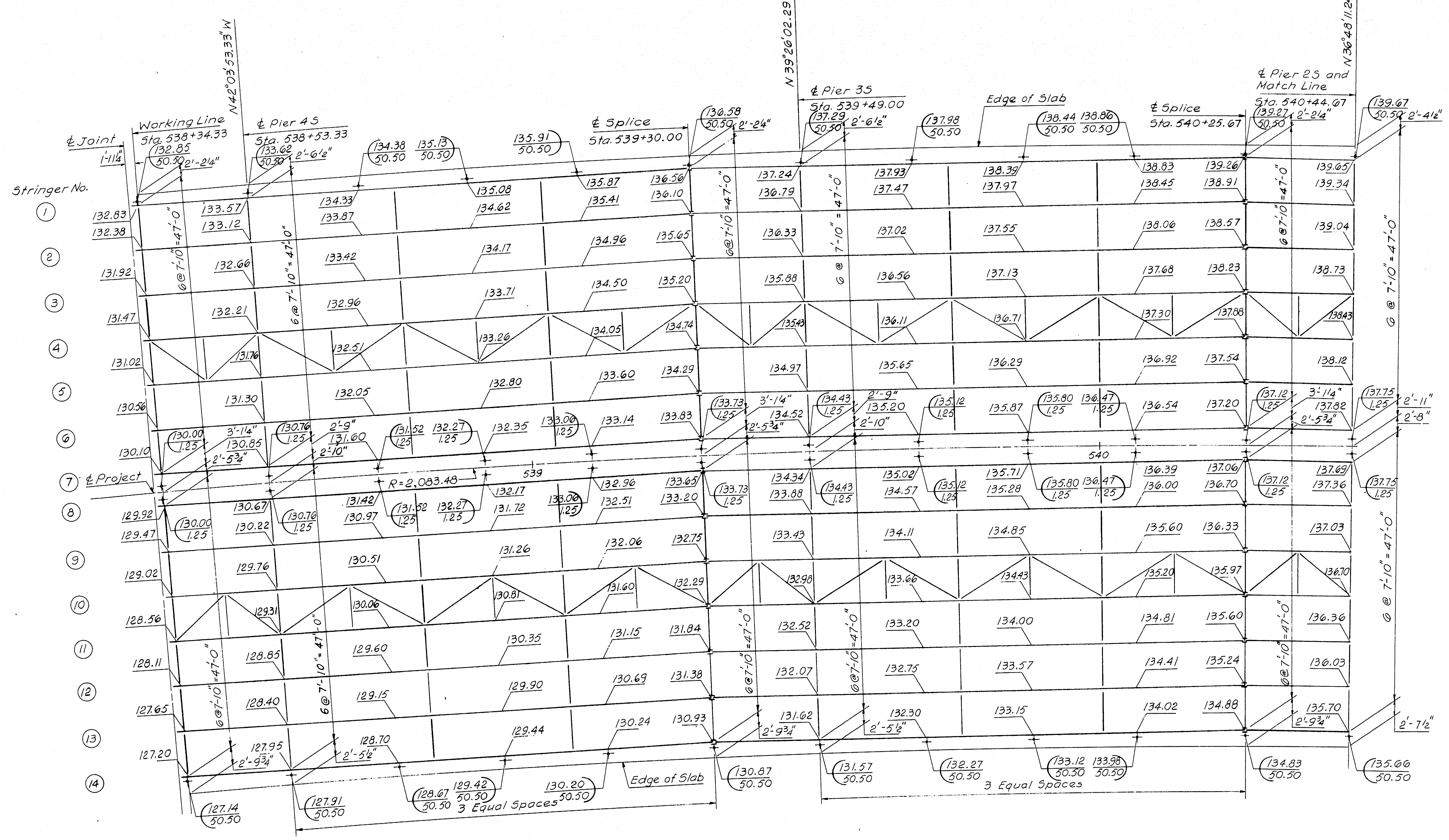

℄ Joint
1'-1¼"
Working Line
Sta. 538+34.33
℄ Pier 4S
Sta. 538+53.33
N42°03'53.33"W
℄ Splice
Sta. 539+30.00
N39°26'02.29"W
℄ Pier 3S
Sta. 539+49.00
Edge of Slab
℄ Splice
Sta. 540+25.67
℄ Pier 2S and Match Line
Sta. 540+44.67
N36°48'11.24"W
Stringer No.
1
2
3
4
5
6
7
8
9
10
11
12
13
14
℄ Project
R=2,083.48
539
540
6 @ 7'-10" = 47'-0"
3'-1¼"
2'-5¾"
2'-9"
2'-10"
2'-2¼"
2'-6½"
2'-4½"
2'-11"
2'-8"
2'-9¾"
2'-5½"
2'-7½"
3 Equal Spaces
Edge of Slab

DESIGN – A. M. M.
TRACE – A. D. T.
CHECK – B. R. A. M. M.

BRIDGE NO.
IN CHARGE OF – R. W. Christie

4

NEW HAMPSHIRE
DEPARTMENT OF PUBLIC WORKS AND HIGHWAYS
AND
MAINE STATE HIGHWAY COMMISSION
INTERSTATE 95 BRIDGE
OVER
PISCATAQUA RIVER
BETWEEN
PORTSMOUTH, NEW HAMPSHIRE AND KITTERY, MAINE
NEW HAMPSHIRE APPROACH

FRAMING PLAN

STA. 538 + 34 TO STA. 540 + 45

SHEET 27 OF 44

HARDESTY & HANOVER
CONSULTING ENGINEERS
NEW YORK, N. Y.

129-78

B. P. R. REG. NO.	STATE	PROJECT NUMBER	SHEET NO.	TOTAL SHEETS
1	MAINE	I-95-1(22).16	28	44

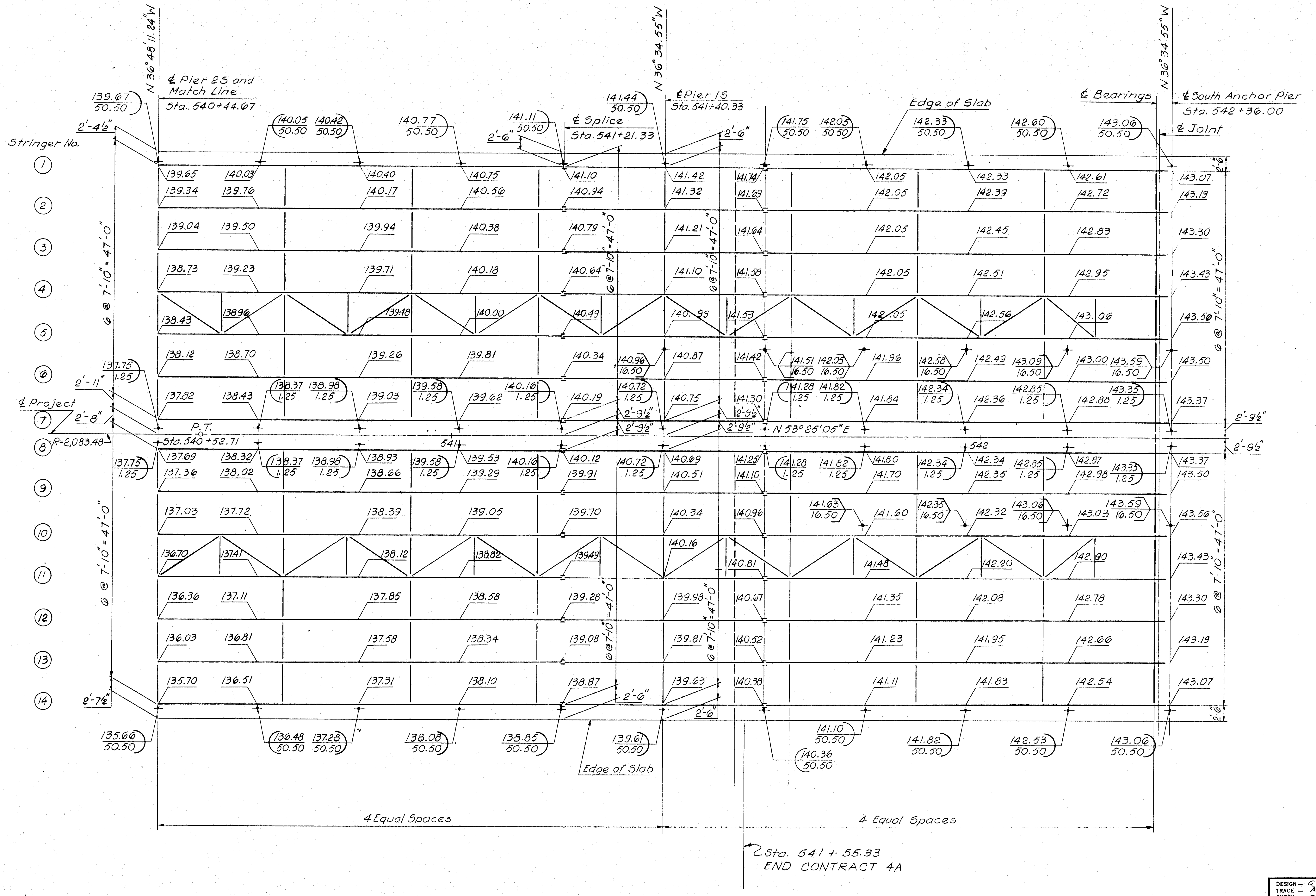

N 36°48'11.24"W
N 36°34.55"W
N 36°34'55"W
℄ Pier 25 and Match Line
Sta. 540+44.67
℄ Splice
Sta. 541+21.33
℄ Pier 15
Sta. 541+40.33
Edge of Slab
℄ Bearings
℄ South Anchor Pier
Sta. 542+36.00
℄ Joint
Stringer No.
1
2
3
4
5
6
7
8
9
10
11
12
13
14
139.67 50.50
140.05 50.50
140.42 50.50
140.77 50.50
141.11 50.50
141.44 50.50
141.75 50.50
142.05 50.50
142.33 50.50
142.60 50.50
143.06 50.50
2'-4½"
2'-6"
2'-11"
2'-8"
2'-9½"
2'-7½"
℄ Project
P.T.
Sta. 540+52.71
R=2,083.48
541
542
N 53°25'05"E
6 @ 7'-10" = 47'-0"
135.66 50.50
136.48 50.50
137.28 50.50
138.08 50.50
138.85 50.50
139.61 50.50
140.36 50.50
141.10 50.50
141.82 50.50
142.53 50.50
143.06 50.50
4 Equal Spaces
4 Equal Spaces
Sta. 541 + 55.33
END CONTRACT 4A

DESIGN – a. M. G. TRACE – A. D. T. CHECK – B. R. a.M.G.	BRIDGE NO. IN CHARGE OF – R. W. Christie

4

NEW HAMPSHIRE
DEPARTMENT OF PUBLIC WORKS AND HIGHWAYS
AND
MAINE STATE HIGHWAY COMMISSION

INTERSTATE 95 BRIDGE
OVER
PISCATAQUA RIVER
BETWEEN
PORTSMOUTH, NEW HAMPSHIRE AND KITTERY, MAINE

NEW HAMPSHIRE APPROACH

FRAMING PLAN
STA. 540+45 TO STA. 542+33

SHEET 28 OF 44

HARDESTY & HANOVER
CONSULTING ENGINEERS
NEW YORK, N. Y.

129-79

B. P. R. REG. NO.	STATE	PROJECT NUMBER	SHEET NO.	TOTAL SHEETS
1	MAINE	I-95-1(22)16	29	44

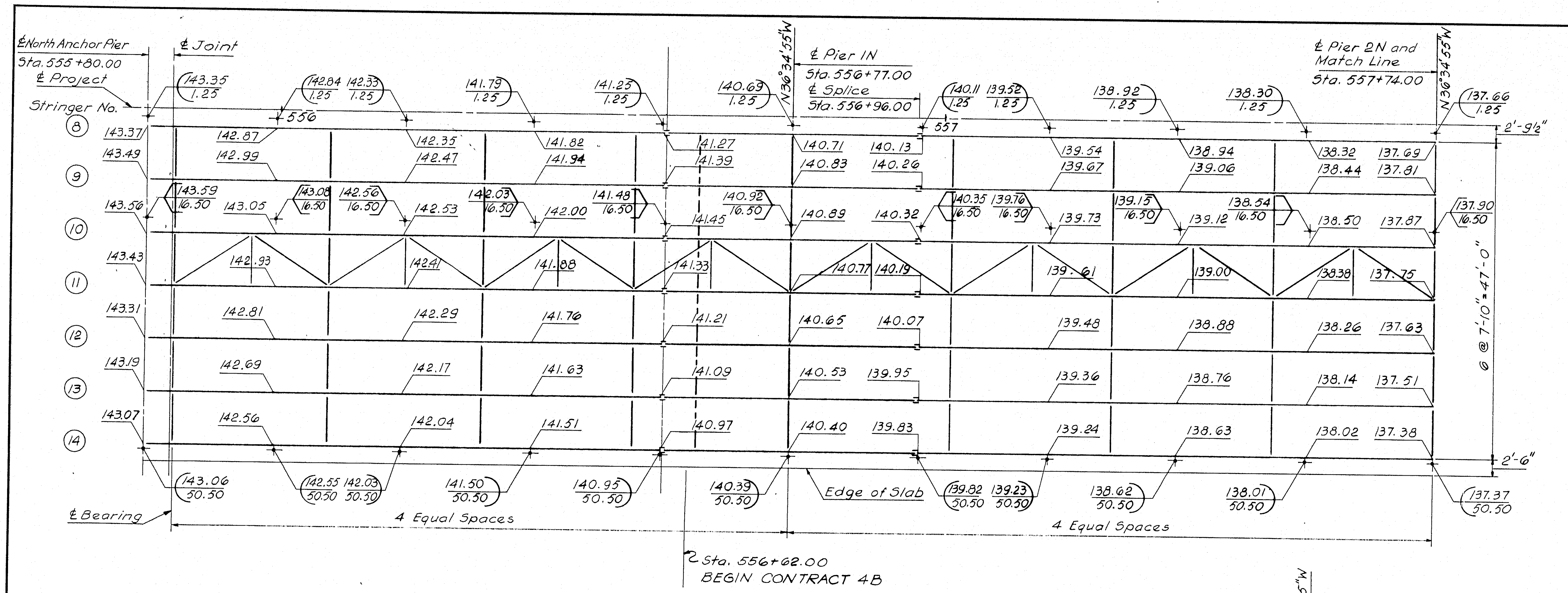

℄ North Anchor Pier
Sta. 555+80.00
℄ Project
℄ Joint
Stringer No.
8
9
10
11
12
13
14
556
557
℄ Pier 1N
Sta. 556+77.00
℄ Splice
Sta. 556+96.00
℄ Pier 2N and
Match Line
Sta. 557+74.00
N 36°34'55"W
2'-9½"
2'-6"
6 @ 7'-10" = 47'-0"
Edge of Slab
℄ Bearing
4 Equal Spaces
4 Equal Spaces
℄ Sta. 556+62.00
BEGIN CONTRACT 4B
143.35 / 1.25
142.84 / 1.25
142.33 / 1.25
141.79 / 1.25
141.23 / 1.25
140.69 / 1.25
140.11 / 1.25
139.58 / 1.25
138.92 / 1.25
138.30 / 1.25
137.66 / 1.25
143.59 / 16.50
143.08 / 16.50
142.56 / 16.50
142.03 / 16.50
141.48 / 16.50
140.92 / 16.50
140.35 / 16.50
139.76 / 16.50
139.15 / 16.50
138.54 / 16.50
137.90 / 16.50
143.06 / 50.50
142.55 / 50.50
142.03 / 50.50
141.50 / 50.50
140.95 / 50.50
140.39 / 50.50
139.82 / 50.50
139.23 / 50.50
138.62 / 50.50
138.01 / 50.50
137.37 / 50.50

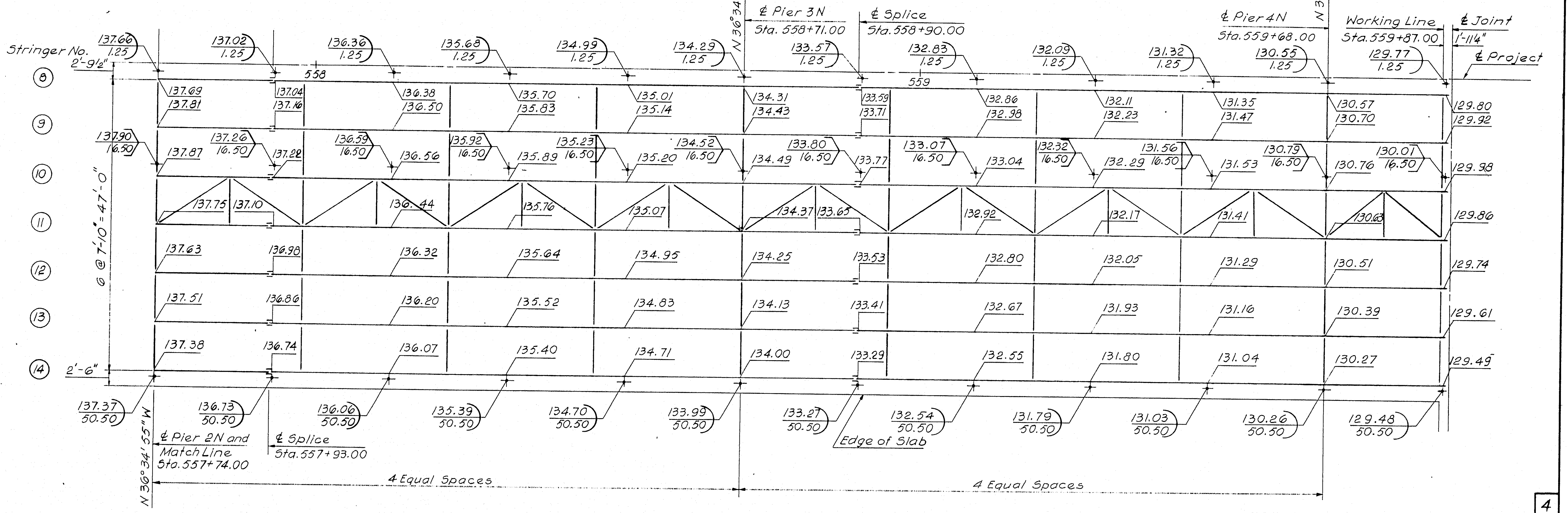

Stringer No.
8
9
10
11
12
13
14
2'-9½"
2'-6"
6 @ 7'-10" = 47'-0"
558
559
℄ Pier 3N
Sta. 558+71.00
℄ Splice
Sta. 558+90.00
℄ Pier 4N
Sta. 559+68.00
Working Line
Sta. 559+87.00
℄ Joint
1'-11¼"
℄ Project
N 36°34'55"W
℄ Pier 2N and
Match Line
Sta. 557+74.00
℄ Splice
Sta. 557+93.00
Edge of Slab
4 Equal Spaces
4 Equal Spaces
137.66 / 1.25
137.02 / 1.25
136.36 / 1.25
135.68 / 1.25
134.99 / 1.25
134.29 / 1.25
133.57 / 1.25
132.83 / 1.25
132.09 / 1.25
131.32 / 1.25
130.55 / 1.25
129.77 / 1.25
137.90 / 16.50
137.26 / 16.50
136.59 / 16.50
135.92 / 16.50
135.23 / 16.50
134.52 / 16.50
133.80 / 16.50
133.07 / 16.50
132.32 / 16.50
131.56 / 16.50
130.79 / 16.50
130.01 / 16.50
137.37 / 50.50
136.73 / 50.50
136.06 / 50.50
135.39 / 50.50
134.70 / 50.50
133.99 / 50.50
133.27 / 50.50
132.54 / 50.50
131.79 / 50.50
131.03 / 50.50
130.26 / 50.50
129.48 / 50.50
129.80
129.92
129.98
129.86
129.74
129.61
129.49

LEGEND:

131.79 ← Gutter Elevation
50.50 ← Gutter Offset

133.07 ← High Point Elevation
16.50 ← High Point Offset

HARDESTY & HANOVER
CONSULTING ENGINEERS
NEW YORK, N.Y.

4

DESIGN – C.M.G.
TRACE – A.D.T.
CHECK – B.R. a.m.g.

BRIDGE NO.
IN CHARGE OF – R.W. Christie

NEW HAMPSHIRE
DEPARTMENT OF PUBLIC WORKS AND HIGHWAYS
AND
MAINE STATE HIGHWAY COMMISSION
INTERSTATE 95 BRIDGE
OVER
PISCATAQUA RIVER
BETWEEN
PORTSMOUTH, NEW HAMPSHIRE AND KITTERY, MAINE
MAINE APPROACH
FRAMING PLAN
STA. 555+80 TO STA. 559+87
SHEET 29 OF 44

129-80

B. P. R. REG. NO.	STATE	PROJECT NUMBER	SHEET NO.	TOTAL SHEETS
1	MAINE	I-95-1(22)16	30	44

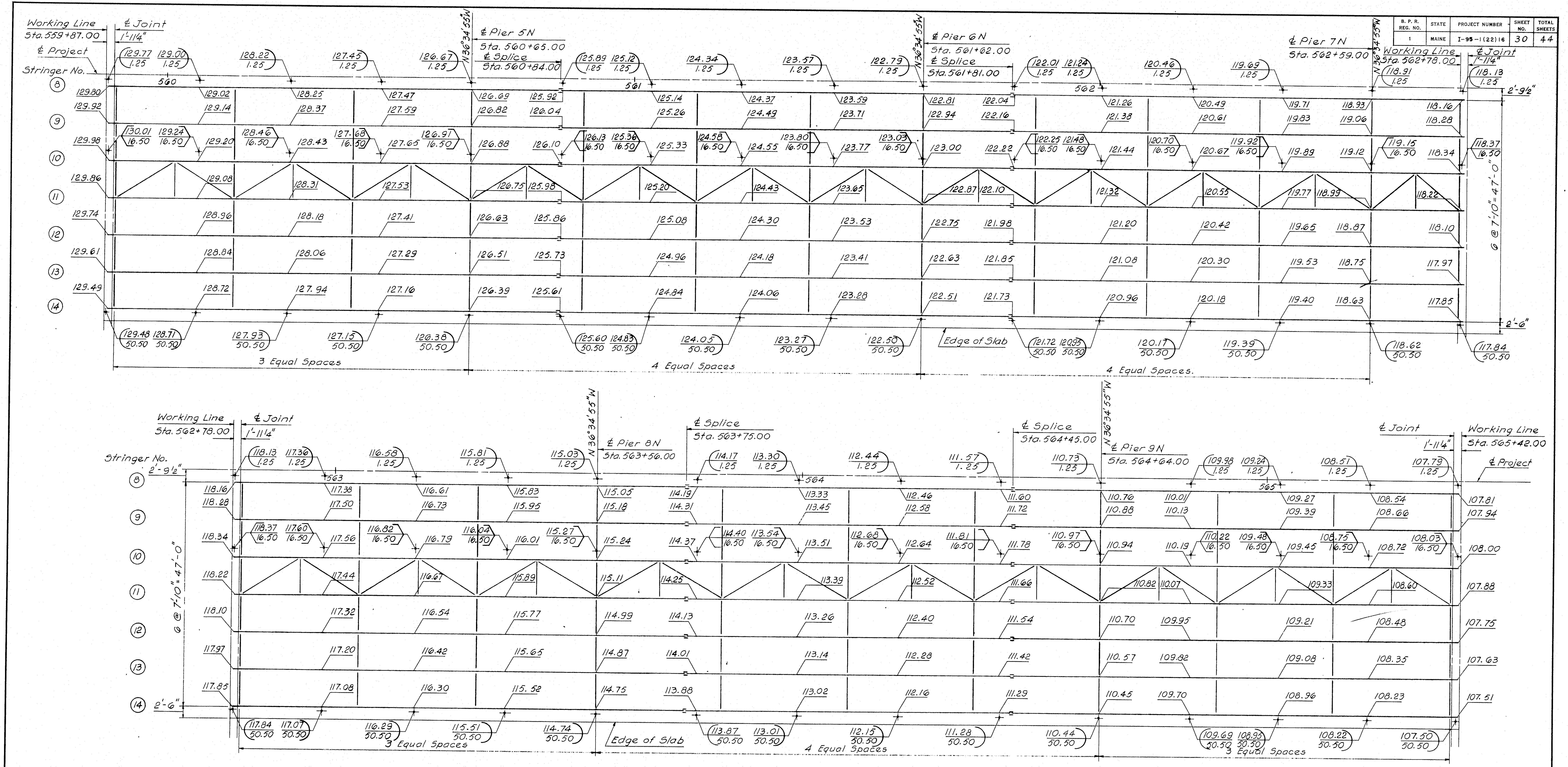

Working Line
Sta. 559+87.00
℄ Joint
1'-11¼"
℄ Project
Stringer No.
8
9
10
11
12
13
14
N 36°34'55"W
℄ Pier 5N
Sta. 560+65.00
℄ Splice
Sta. 560+84.00
560
561
℄ Pier 6N
Sta. 561+62.00
℄ Splice
Sta. 561+81.00
562
℄ Pier 7N
Sta. 562+59.00
Working Line
Sta. 562+78.00
2'-9½"
6 @ 7'-10" = 47'-0"
2'-6"
Edge of Slab
3 Equal Spaces
4 Equal Spaces
4 Equal Spaces.
Working Line
Sta. 562+78.00
℄ Joint
1'-11¼"
Stringer No.
℄ Pier 8N
Sta. 563+56.00
℄ Splice
Sta. 563+75.00
563
564
℄ Splice
Sta. 564+45.00
℄ Pier 9N
Sta. 564+64.00
565
℄ Joint
1'-11¼"
Working Line
Sta. 565+42.00
℄ Project
2'-9½"
6 @ 7'-10" = 47'-0"
2'-6"
Edge of Slab
3 Equal Spaces
4 Equal Spaces
3 Equal Spaces

4

DESIGN – G. M. D.
TRACE – A. D. T.
CHECK – B. R.   a. M. G.

BRIDGE NO.
IN CHARGE OF – R. W. Christie

NEW HAMPSHIRE
DEPARTMENT OF PUBLIC WORKS AND HIGHWAYS
AND
MAINE STATE HIGHWAY COMMISSION

INTERSTATE 95 BRIDGE
OVER
PISCATAQUA RIVER
BETWEEN
PORTSMOUTH, NEW HAMPSHIRE AND KITTERY, MAINE

MAINE APPROACH

FRAMING PLAN
STA. 559 + 87 TO STA. 565 + 42

SHEET 30 OF 44

HARDESTY & HANOVER
CONSULTING ENGINEERS
NEW YORK, N. Y.

129-81

B. P. R. REG. NO.	STATE	PROJECT NUMBER	SHEET NO.	TOTAL SHEETS
1	MAINE	I-95-1(22)16	31	44

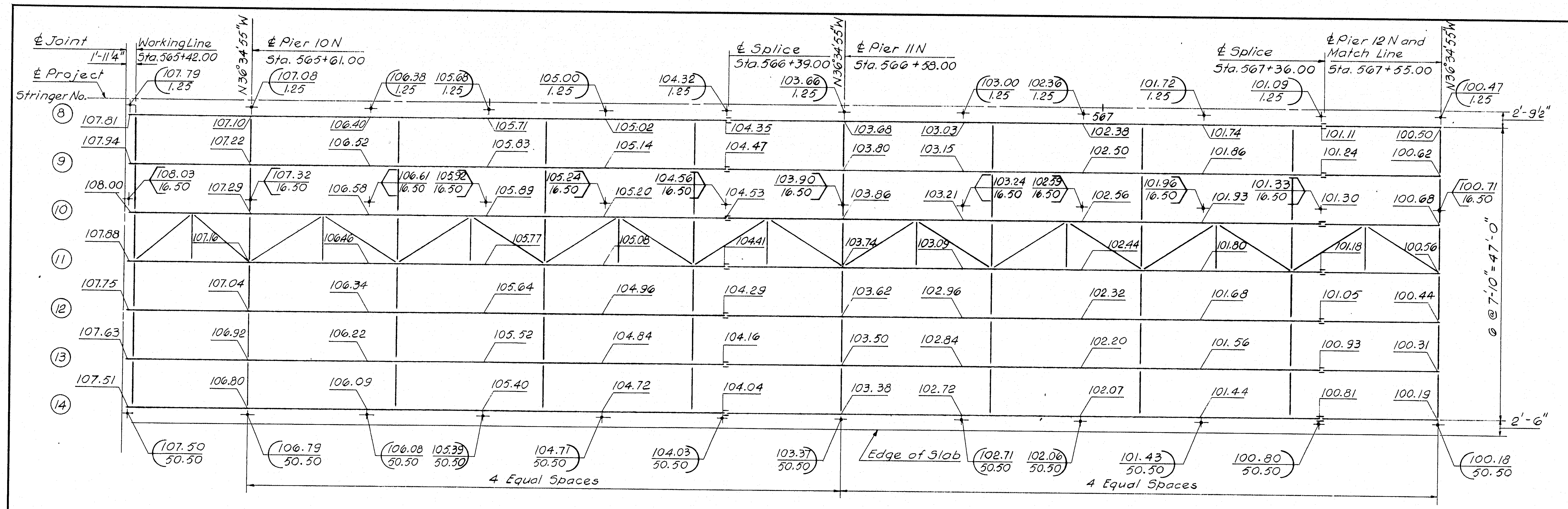

℄ Joint
1'-11¼"
℄ Project
Stringer No.
Working Line
Sta. 565+42.00
N36°34'55"W
℄ Pier 10N
Sta. 565+61.00
℄ Splice
Sta. 566+39.00
℄ Pier 11N
Sta. 566+58.00
℄ Splice
Sta. 567+36.00
℄ Pier 12 N and
Match Line
Sta. 567+55.00
107.79 / 1.25
107.08 / 1.25
106.38 / 1.25
105.68 / 1.25
105.00 / 1.25
104.32 / 1.25
103.66 / 1.25
103.00 / 1.25
102.36 / 1.25
101.72 / 1.25
101.09 / 1.25
100.47 / 1.25
567
8
9
10
11
12
13
14
107.81
107.94
108.00
107.88
107.75
107.63
107.51
107.10
107.22
108.03 / 16.50
107.29
107.32 / 16.50
107.16
107.04
106.92
106.80
106.40
106.52
106.58
106.61 / 16.50
105.98 / 16.50
106.46
106.34
106.22
106.09
105.71
105.83
105.89
105.24 / 16.50
105.77
105.64
105.52
105.40
105.02
105.14
105.20
104.56 / 16.50
105.08
104.96
104.84
104.72
104.35
104.47
104.53
103.90 / 16.50
104.41
104.29
104.16
104.04
103.68
103.80
103.86
103.74
103.62
103.50
103.38
103.03
103.15
103.21
103.24 / 16.50
102.59 / 16.50
103.09
102.96
102.84
102.72
102.38
102.50
102.56
102.44
102.32
102.20
102.07
101.96 / 16.50
101.74
101.86
101.93
101.33 / 16.50
101.80
101.68
101.56
101.44
101.11
101.24
101.30
101.18
101.05
100.93
100.81
100.50
100.62
100.68
100.71 / 16.50
100.56
100.44
100.31
100.19
2'-9½"
6 @ 7'-10" = 47'-0"
2'-6"
107.50 / 50.50
106.79 / 50.50
106.08 / 50.50
105.39 / 50.50
104.71 / 50.50
104.03 / 50.50
103.37 / 50.50
Edge of Slab
102.71 / 50.50
102.06 / 50.50
101.43 / 50.50
100.80 / 50.50
100.18 / 50.50
4 Equal Spaces
4 Equal Spaces

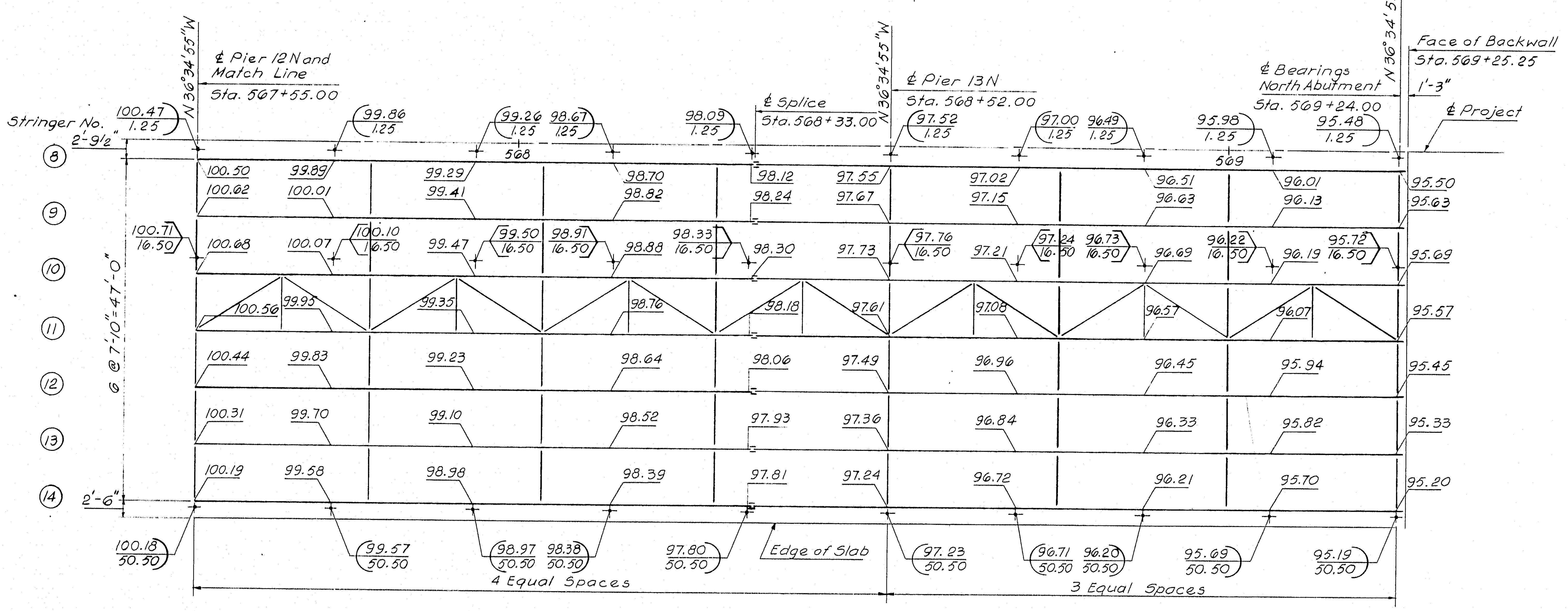

℄ Pier 12 N and
Match Line
Sta. 567+55.00
N36°34'55"W
℄ Splice
Sta. 568+33.00
℄ Pier 13N
Sta. 568+52.00
℄ Bearings
North Abutment
Sta. 569+24.00
Face of Backwall
Sta. 569+25.25
1'-3"
℄ Project
Stringer No.
100.47 / 1.25
99.86 / 1.25
99.26 / 1.25
98.67 / 1.25
98.09 / 1.25
97.52 / 1.25
97.00 / 1.25
96.49 / 1.25
95.98 / 1.25
95.48 / 1.25
568
569
2'-9½"
8
9
10
11
12
13
14
6 @ 7'-10" = 47'-0"
2'-6"
100.50
100.62
100.71 / 16.50
100.68
100.56
100.44
100.31
100.19
99.89
100.01
100.07
100.10 / 16.50
99.95
99.83
99.70
99.58
99.29
99.41
99.47
99.50 / 16.50
98.91 / 16.50
99.35
99.23
99.10
98.98
98.70
98.82
98.88
98.33 / 16.50
98.76
98.64
98.52
98.39
98.12
98.24
98.30
98.18
98.06
97.93
97.81
97.55
97.67
97.73
97.61
97.49
97.36
97.24
97.76 / 16.50
97.02
97.15
97.21
97.24 / 16.50
96.73 / 16.50
97.08
96.96
96.84
96.72
96.51
96.63
96.69
96.22 / 16.50
96.57
96.45
96.33
96.21
96.01
96.13
96.19
95.72 / 16.50
96.07
95.94
95.82
95.70
95.50
95.63
95.69
95.57
95.45
95.33
95.20
100.18 / 50.50
99.57 / 50.50
98.97 / 50.50
98.38 / 50.50
97.80 / 50.50
Edge of Slab
97.23 / 50.50
96.71 / 50.50
96.20 / 50.50
95.69 / 50.50
95.19 / 50.50
4 Equal Spaces
3 Equal Spaces

4

DESIGN — C.M.G.
TRACE — A.D.T.
CHECK — B.R. a.M.G.

BRIDGE NO.
IN CHARGE OF — R.W. Christie

NEW HAMPSHIRE
DEPARTMENT OF PUBLIC WORKS AND HIGHWAYS
AND
MAINE STATE HIGHWAY COMMISSION

INTERSTATE 95 BRIDGE
OVER
PISCATAQUA RIVER
BETWEEN
PORTSMOUTH, NEW HAMPSHIRE AND KITTERY, MAINE

MAINE APPROACH

FRAMING PLAN
STA. 565 + 42 TO STA. 569 + 24

SHEET 31 OF 44

HARDESTY & HANOVER
CONSULTING ENGINEERS
NEW YORK, N. Y.

129.-82

B. P. R. REG. NO.	STATE	PROJECT NUMBER	SHEET NO.	TOTAL SHEETS
1	MAINE	I-95-1(22)16	32	44

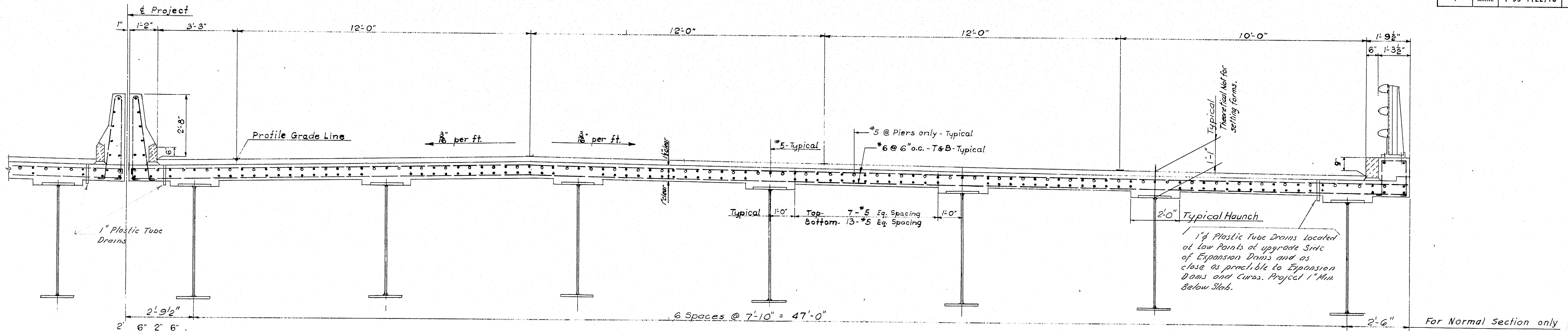
℄ Project
1"
1'-2"
3'-3"
12'-0"
12'-0"
12'-0"
10'-0"
1'-9½"
6"
1'-3½"
2'-8"
6
Profile Grade Line
3/16" per ft.
3/16" per ft.
1½" clear
1" clear
#5-Typical
#5 @ Piers only - Typical
#6 @ 6" o.c. - T&B - Typical
Typical
Theoretical Not for setting forms.
1'-1"
9"
Typical
1'-0"
Top- 7-#5 Eq. Spacing
Bottom- 13-#5 Eq. Spacing
1'-0"
2'-0"
Typical Haunch
1" Plastic Tube Drains
1"φ Plastic Tube Drains Located at Low Points at upgrade Side of Expansion Dams and as close as practible to Expansion Dams and Curbs. Project 1" Min. Below Slab.
2'-9½"
6 Spaces @ 7'-10" = 47'-0"
2'-6"
For Normal Section only

CROSS SECTION — DECK SLAB

Scale: ½"=1'-0"

(STRUCTURAL STEEL BY OTHERS)

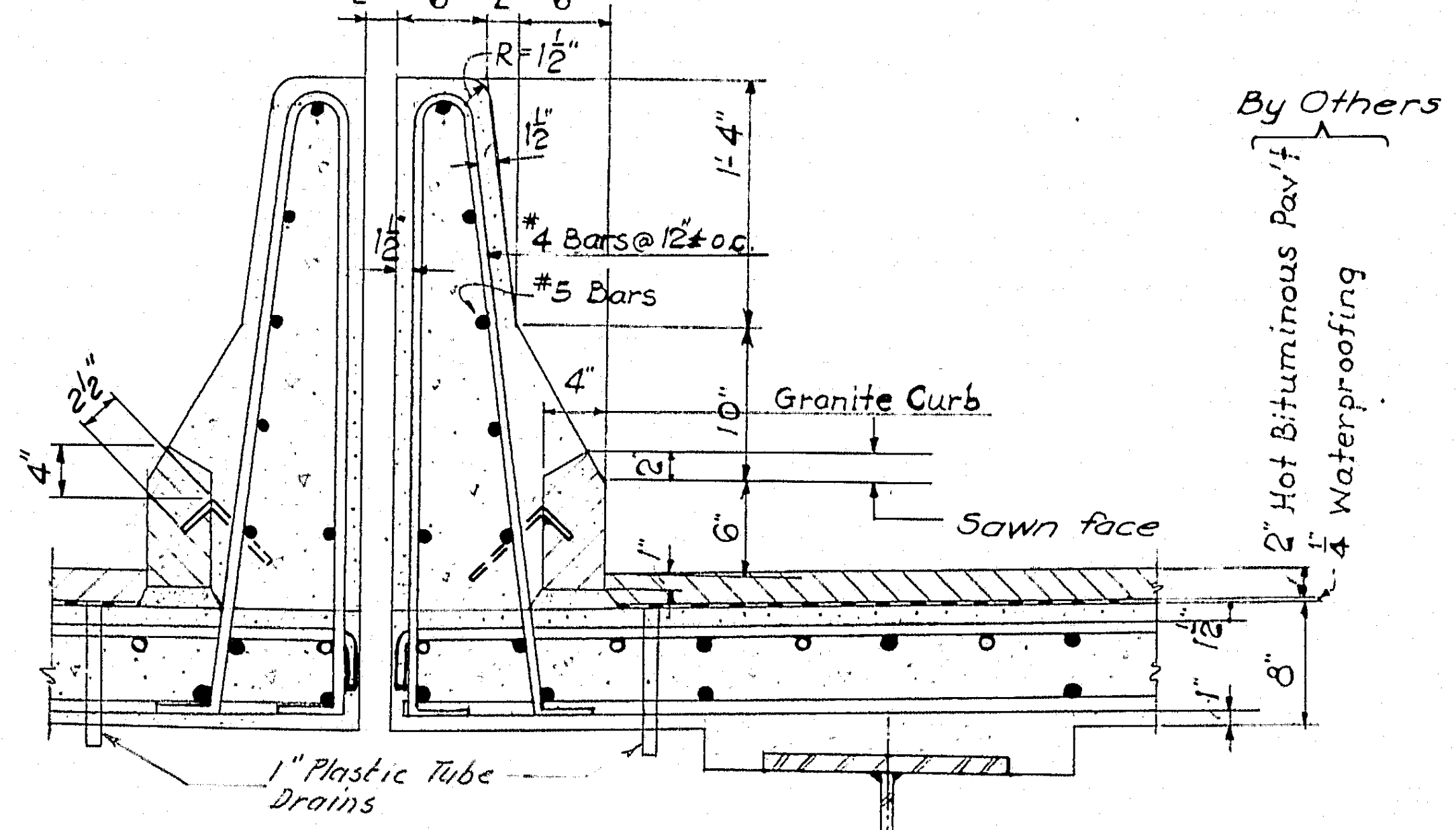
2'
6"
2"
6"
R=1½"
1½"
1'-4"
1½"
#4 Bars @ 12"± o.c.
#5 Bars
4"
2½"
4"
10"
Granite Curb
2
Sawn face
6"
1"
By Others
2" Hot Bituminous Pav't
¼" Waterproofing
1½"
8"
1"
1" Plastic Tube Drains

MEDIAN BARRIER
APPROACH SPANS

Scale: 1"=1'-0"

Note:
For detail of Granite curb at contraction joints see Railing Details

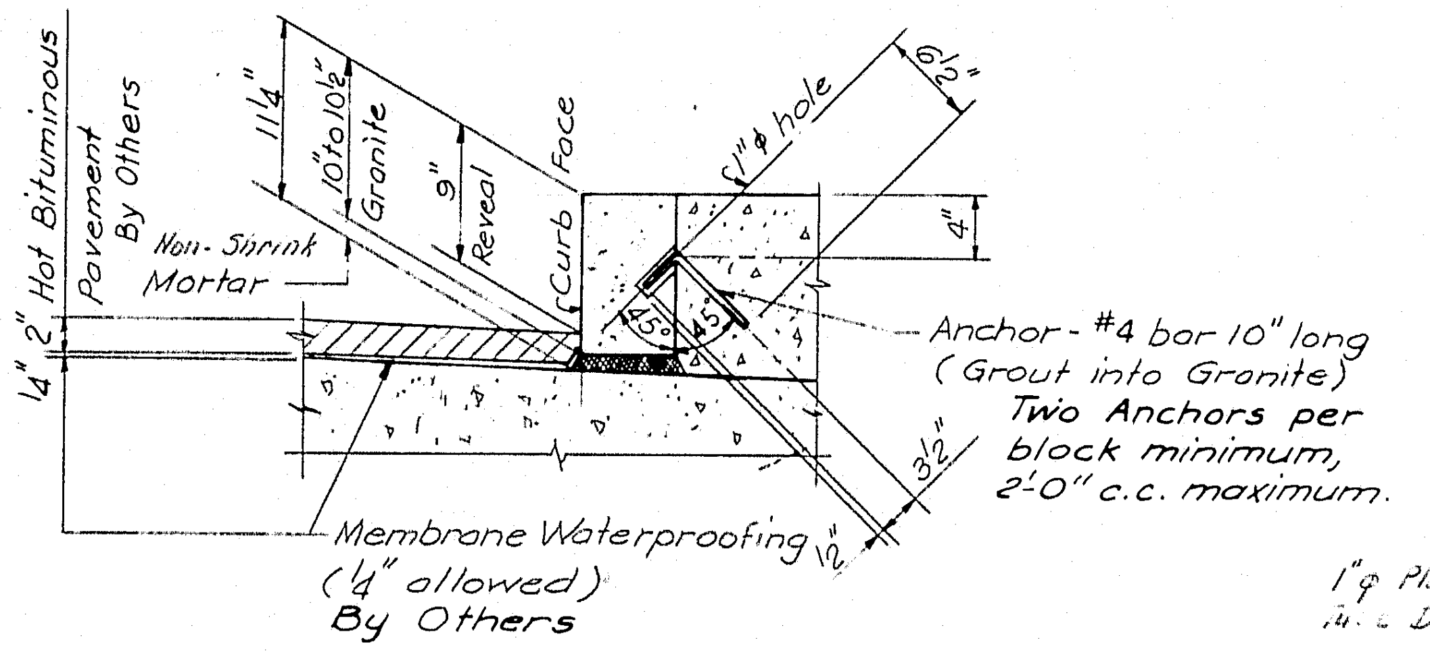
2" Hot Bituminous Pavement By Others
¼"
Non-Shrink Mortar
11¼"
10" to 10½"
Granite
9"
Reveal
Curb Face
1"φ hole
6½"
4"
45°
45°
Anchor - #4 bar 10" long (Grout into Granite) Two Anchors per block minimum, 2'-0" c.c. maximum.
3½"
½"
Membrane Waterproofing (¼" allowed) By Others

GRANITE CURB

Scale: 1"=1'-0"

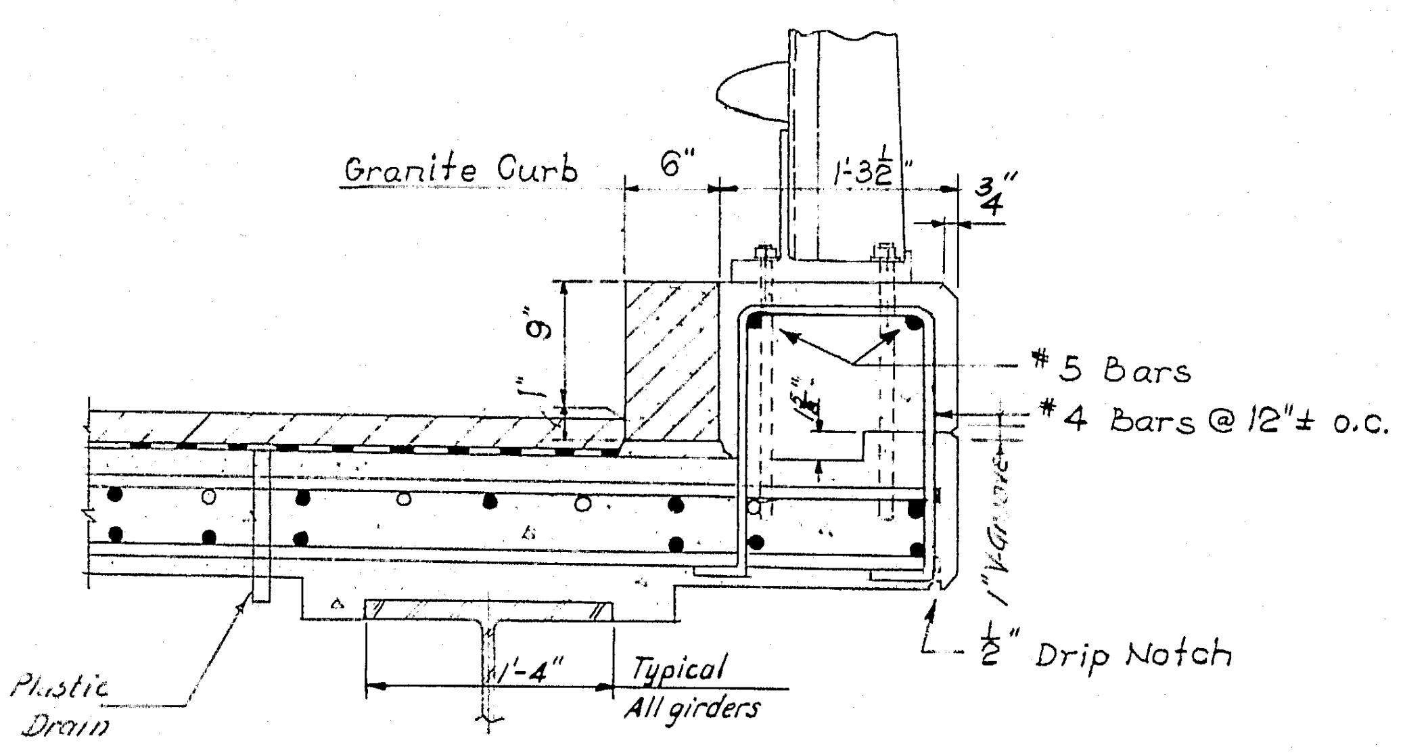
Granite Curb
6"
1'-3½"
¾"
9"
1"
1½"
#5 Bars
#4 Bars @ 12"± o.c.
1" V-Groove
½" Drip Notch
1"φ Plastic Tube Drain
1'-4"
Typical All girders

SIDEWALK

Scale: 1"=1'-0"

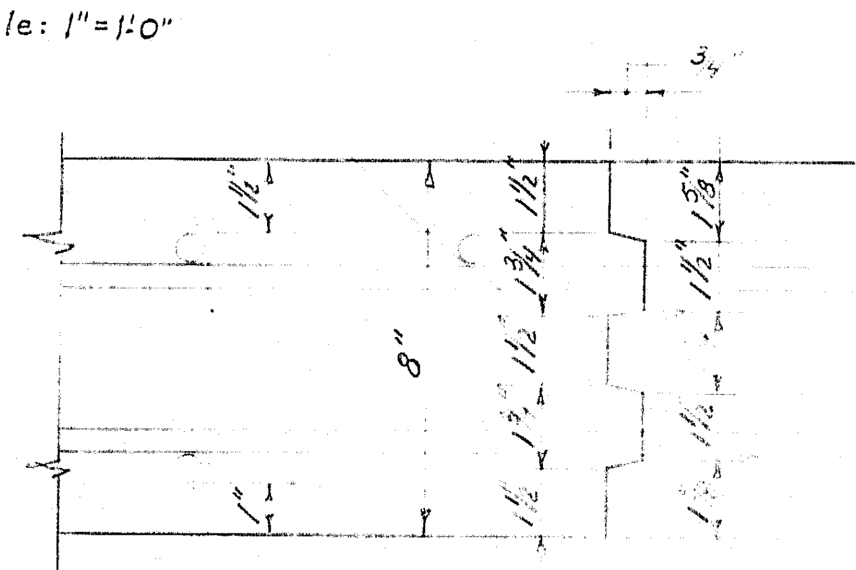

TRANSVERSE CONSTRUCTION JOINT DETAIL
FLOOR SLAB

NEW HAMPSHIRE

DEAD LOAD DEFLECTIONS FOR STRINGERS

LOAD	Pier 18→			Pier 17→				Pier 16→				Pier 15→				Pier 14→			
	18 3/4	18 1/2	18 1/4	17 4/5	17 3/5	17 2/5	17 1/5	16 4/5	16 3/5	16 2/5	16 1/5	15 4/5	15 3/5	15 2/5	15 1/5	14 4/5	14 3/5	14 2/5	14 1/5
Steel	1/16	1/16	1/16	1/16	1/8	1/8	1/16	1/16	3/16	3/16	1/16	1/16	1/16	1/16	1/16	1/16	3/16	3/16	1/16
Concrete	1/4	5/16	1/4	5/16	5/8	5/8	1/4	5/16	5/8	5/8	3/8	1/4	7/16	3/8	1/8	1/4	5/8	5/8	1/4
Asphalt	1/16	1/16	—	1/16	1/16	1/16	1/16	1/16	1/16	1/16	1/16	—	1/16	1/16	—	1/16	1/16	1/16	1/16
TOTAL	3/8	7/16	5/16	7/16	13/16	13/16	3/8	7/16	7/8	7/8	1/2	5/16	9/16	1/2	3/16	3/8	7/8	7/8	3/8
	Stringers 1- 19											Stringers 1-17							

LOAD	Pier 13→				Pier 12→				Pier 11→				Pier 10→				Pier 9→			
	13 4/5	13 3/5	13 2/5	13 1/5	12 4/5	12 3/5	12 2/5	12 1/5	11 4/5	11 3/5	11 2/5	11 1/5	10 4/5	10 3/5	10 2/5	10 1/5	9 4/5	9 3/5	9 2/5	9 1/5
Steel	1/16	1/16	1/16	1/16	1/16	3/16	3/16	1/16	1/16	1/16	1/16	1/16	1/16	1/16	1/16	1/16	1/16	1/16	1/16	1/16
Concrete	1/4	1/4	1/4	1/8	3/8	11/16	5/8	5/16	3/16	7/16	7/16	3/16	3/16	3/8	3/8	1/8	1/8	5/16	5/16	1/8
Asphalt	—	—	1/16	—	1/16	1/16	1/16	1/16	—	1/16	1/16	—	—	1/16	1/16	—	—	1/16	1/16	—
TOTAL	5/16	5/16	3/8	3/16	1/2	15/16	7/8	7/16	1/4	9/16	9/16	1/4	1/4	1/2	1/2	3/16	3/16	7/16	7/16	3/16
					Stringers 1- 16															

LOAD	Pier 8→				Pier 7→				Pier 6→				Pier 5→				Pier 4→			
	8 4/5	8 3/5	8 2/5	8 1/5	7 4/5	7 3/5	7 2/5	7 1/5	6 4/5	6 3/5	6 2/5	6 1/5	5 4/5	5 3/5	5 2/5	5 1/5	4 4/5	4 3/5	4 2/5	4 1/5
Steel	1/16	1/16	1/16	1/16	1/16	1/8	1/8	1/16	1/16	1/16	1/16	—	—	1/16	1/16	—	—	1/16	1/16	—
Concrete	1/8	5/16	5/16	1/8	1/4	7/16	7/16	3/16	1/8	5/16	5/16	1/8	1/8	1/4	1/4	1/8	1/8	1/4	1/4	1/8
Asphalt	—	1/16	1/16	—	—	1/16	1/16	—	—	1/16	1/16	—	—	1/16	1/16	—	—	1/16	1/16	—
TOTAL	3/16	7/16	7/16	3/16	5/16	5/8	5/8	1/4	3/16	7/16	7/16	1/8	1/8	3/8	3/8	1/8	1/8	3/8	3/8	1/8
					Stringers 1-14															

MAINE

DEAD LOAD DEFLECTIONS FOR STRINGERS

LOAD	←Pier 4				←Pier 5				←Pier6				←Pier 7				←Pier 8			
	4 1/5	4 2/5	4 3/5	4 4/5	5 1/5	5 2/5	5 3/5	5 4/5	6 1/5	6 2/5	6 3/5	6 4/5	7 1/5	7 2/5	7 3/5	7 4/5	8 1/5	8 2/5	8 3/5	8 4/5
Steel	1/16	1/16	1/16	1/16	1/16	1/16	1/16	1/16	1/16	1/8	1/8	1/16	1/16	1/16	1/16	—	1/16	1/8	1/8	1/16
Concrete	3/16	3/8	3/8	3/16	3/16	7/16	7/16	3/16	1/4	1/2	1/2	1/4	1/8	5/16	1/4	1/8	1/4	5/8	5/8	1/4
Asphalt	—	1/16	1/16	—	—	1/16	1/16	—	—	1/16	1/16	—	—	1/16	1/16	—	—	1/16	1/16	—
TOTAL	1/4	1/2	1/2	1/4	1/4	9/16	9/16	1/4	5/16	11/16	11/16	5/16	3/16	7/16	3/8	1/8	5/16	13/16	13/16	5/16

LOAD	←Pier 9				←Pier 10				←Pier 11				←Pier 12				←Pier13		
	9 1/5	9 2/5	9 3/5	9 4/5	10 1/5	10 2/5	10 3/5	10 4/5	11 1/5	11 2/5	11 3/5	11 4/5	12 1/5	12 2/5	12 3/5	12 4/5	13 1/4	13 1/2	13 3/4
Steel	—	1/16	1/16	1/16	1/16	1/8	1/8	1/16	1/16	1/16	1/16	1/16	1/16	1/8	1/8	1/16	1/16	1/16	1/16
Concrete	1/16	1/4	5/16	1/8	1/4	7/16	7/16	3/16	1/8	7/16	7/16	3/16	1/4	9/16	9/16	1/4	1/8	1/4	1/8
Asphalt	—	1/16	1/16	—	—	1/16	1/16	—	—	1/16	1/16	—	1/16	1/16	1/16	1/16	—	—	—
TOTAL	1/16	3/8	7/16	3/16	5/16	5/8	5/8	1/4	3/16	9/16	9/16	1/4	3/8	3/4	3/4	3/8	3/16	5/16	3/16

Stringers 1-14

For spans not shown see sh. 33.

HARDESTY & HANOVER
CONSULTING ENGINEERS
NEW YORK, N.Y.

4

DESIGN – [illegible]
TRACE – R. Spain
CHECK – S. Nishimura

BRIDGE NO.
IN CHARGE OF – R.W. Christie

NEW HAMPSHIRE
DEPARTMENT OF PUBLIC WORKS AND HIGHWAYS
AND
MAINE STATE HIGHWAY COMMISSION
INTERSTATE 95 BRIDGE
OVER
PISCATAQUA RIVER
BETWEEN
PORTSMOUTH, NEW HAMPSHIRE AND KITTERY, MAINE

APPROACH SPANS

STEEL & CONCRETE DETAILS I

SHEET 32 OF 44

129-83

B. P. R. REG. NO.	STATE	PROJECT NUMBER	SHEET NO.	TOTAL SHEETS
1	MAINE	I-95-1(22) 16	33	44

NEW HAMPSHIRE

	←Pier 4S				←Pier 3S				←Pier 2S				←Pier 1S Anchor Pier→			
	4/5	3/5	2/5	1/5	4/5	3/5	2/5	1/5	4/5	3/5	2/5	1/5	4/5	3/5	2/5	1/5
NO-LOAD CAMBER	1/8	7/16	7/16	3/16	3/16	1/2	1/2	1/4	1/8	3/8	3/8	1/8	1/2			
STEEL DEFLECTION	0	-1/16	-1/16	0	0	-1/16	-1/16	0	-1/8	-1/4	-1/4	-1/8	3/16			
CONCRETE DEFLECTION	-1/8	-3/8	-3/8	-3/16	-1/16	-1/8	-1/8	-1/16	-3/8	-13/16	-15/16	-5/8	9/16			
FINAL POSITION UNDER THIS CONTRACT	0	0	0	0	1/8	5/16	5/16	3/16	-3/8	-11/16	-13/16	-5/8	1 1/4			

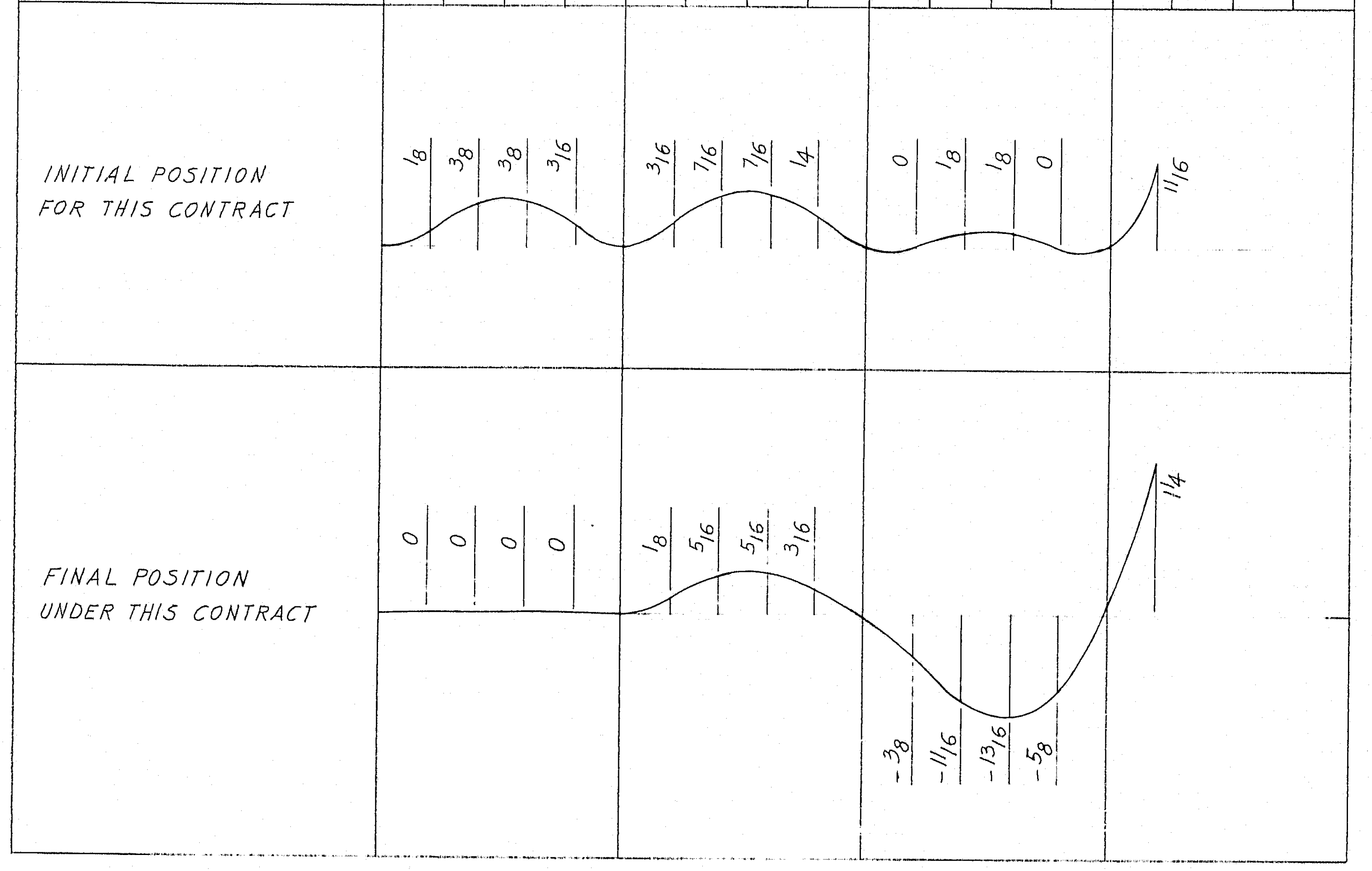

MAINE

	←Anchor Pier Pier 1N→				Pier 2N→				Pier 3N→				Pier 4N→			
	1/5	2/5	3/5	4/5	1/5	2/5	3/5	4/5	1/5	2/5	3/5	4/5	1/5	2/5	3/5	4/5
NO-LOAD CAMBER				9/16	1/8	5/16	5/16	1/8	3/16	1/2	1/2	3/16	1/4	9/16	9/16	1/4
STEEL DEFLECTION				3/16	-1/8	-1/4	-1/4	-1/8	0	-1/16	-1/16	0	-1/16	-1/8	-1/8	-1/16
CONCRETE DEFLECTION				9/16	-5/8	-15/16	-13/16	-3/8	0	-1/8	-1/8	-1/16	-3/16	-7/16	-7/16	-3/16
FINAL POSITION UNDER THIS CONTRACT				1 5/16	-5/8	-7/8	-3/4	-3/8	3/16	5/16	5/16	1/8	0	0	0	0

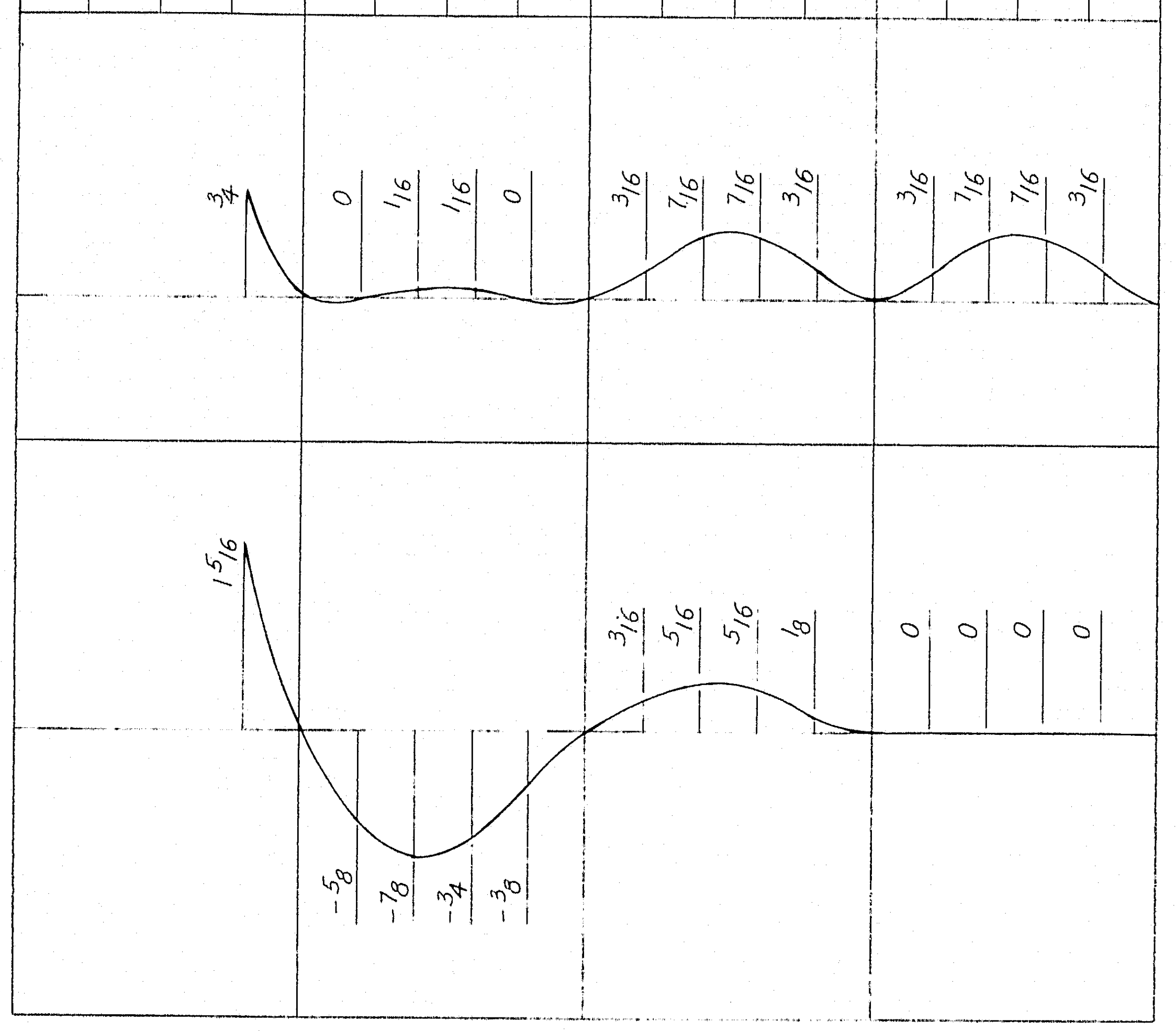

DEFLECTIONS OF STRINGERS NEAR RIVER BRIDGE

1. Values are in Inches.
2. For remainder of stringers see Sh. 32.

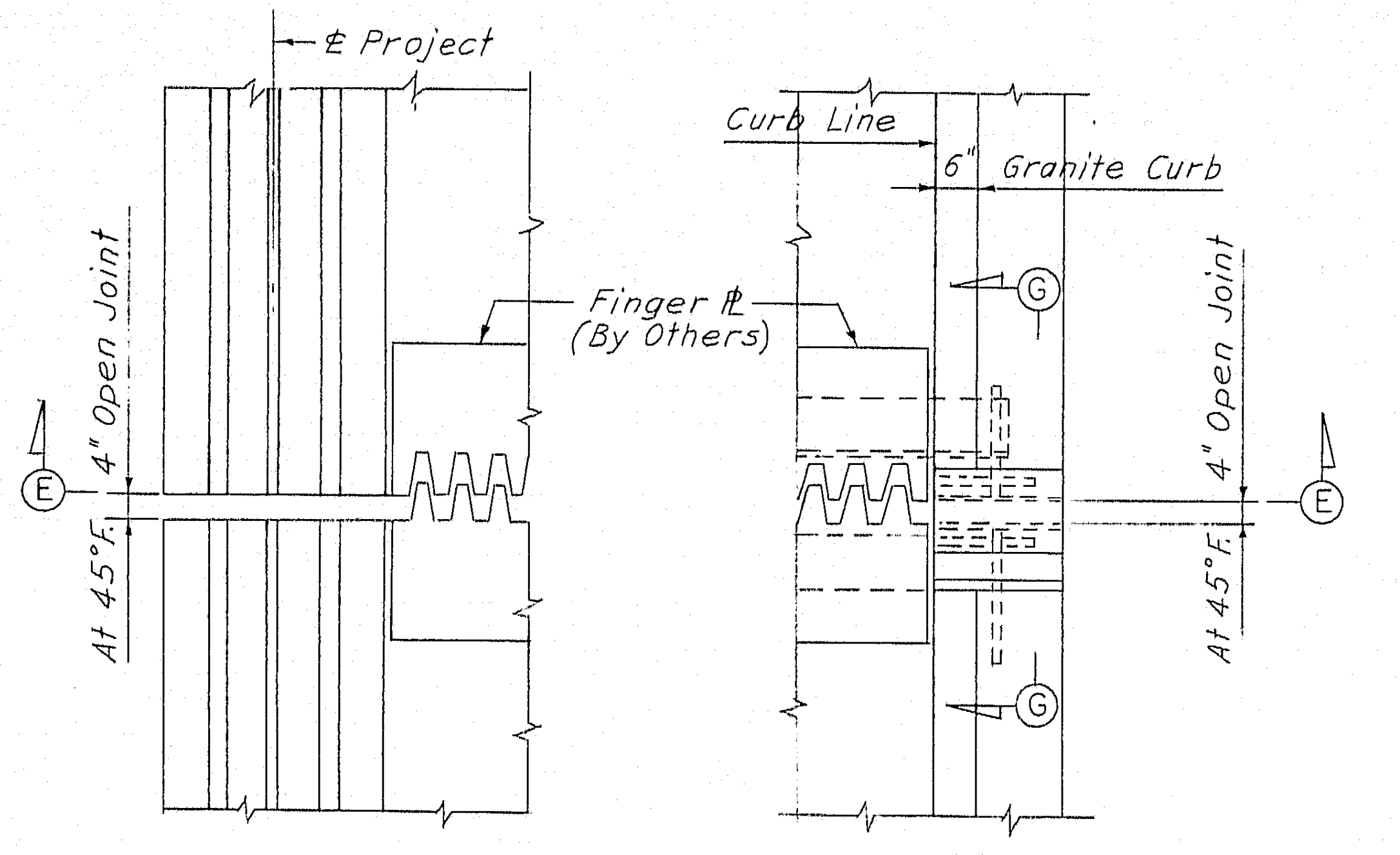
℄ Project
Curb Line
6"
Granite Curb
Finger ℙ (By Others)
4" Open Joint
At 45°F.
E
G

PLAN

Scale: 1/2"=1'-0"

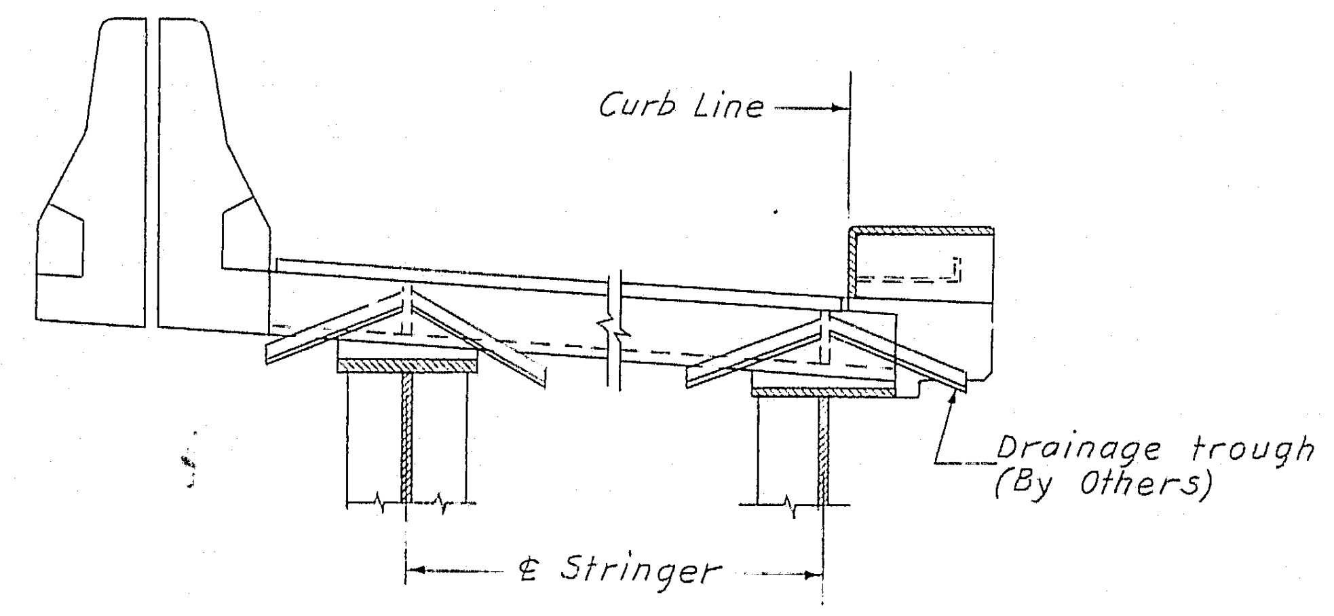
Curb Line
Drainage trough (By Others)
℄ Stringer

SECTION E-E

Scale: 1/2"=1'-0"

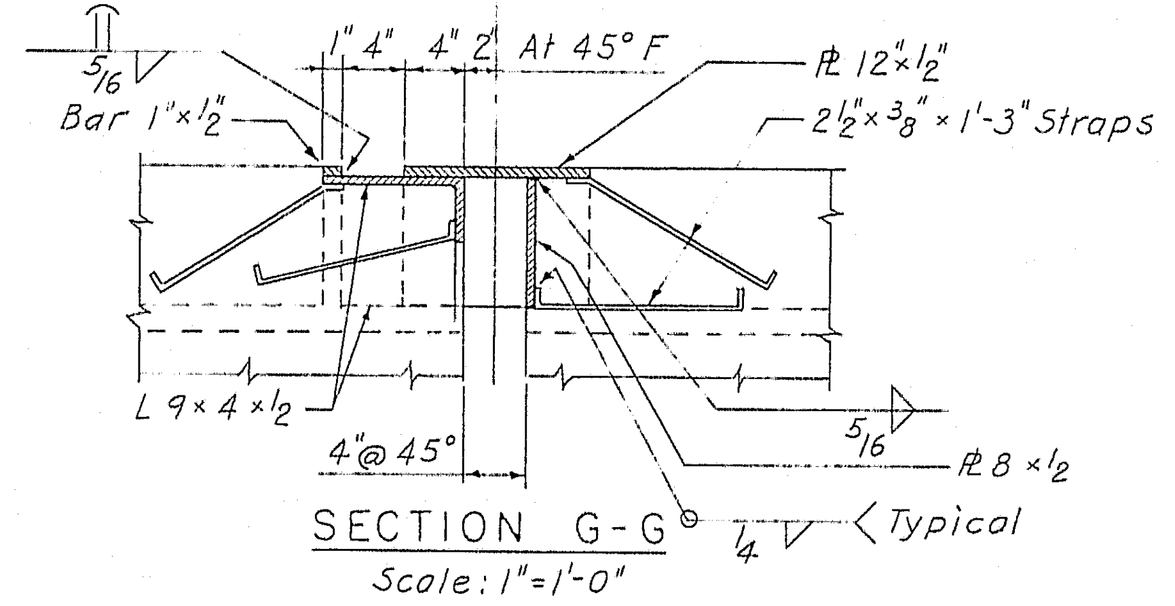
℄ Brush Curb Exp. Jt.
1"
4"
4"
2"
At 45° F
5/16
Bar 1"×1/2"
ℙ 12"×1/2"
2 1/2"×3/8"×1'-3" Straps
L 9×4×1/2
4"@ 45°
5/16
ℙ 8×1/2
1/4
Typical

SECTION G-G

Scale: 1"=1'-0"

Note: All exposed material to be "Corrosion Resisting" ASTM A242 Steel

MEDIAN & BRUSH CURB EXPANSION JOINT

(Items 502.261 & 502.262)

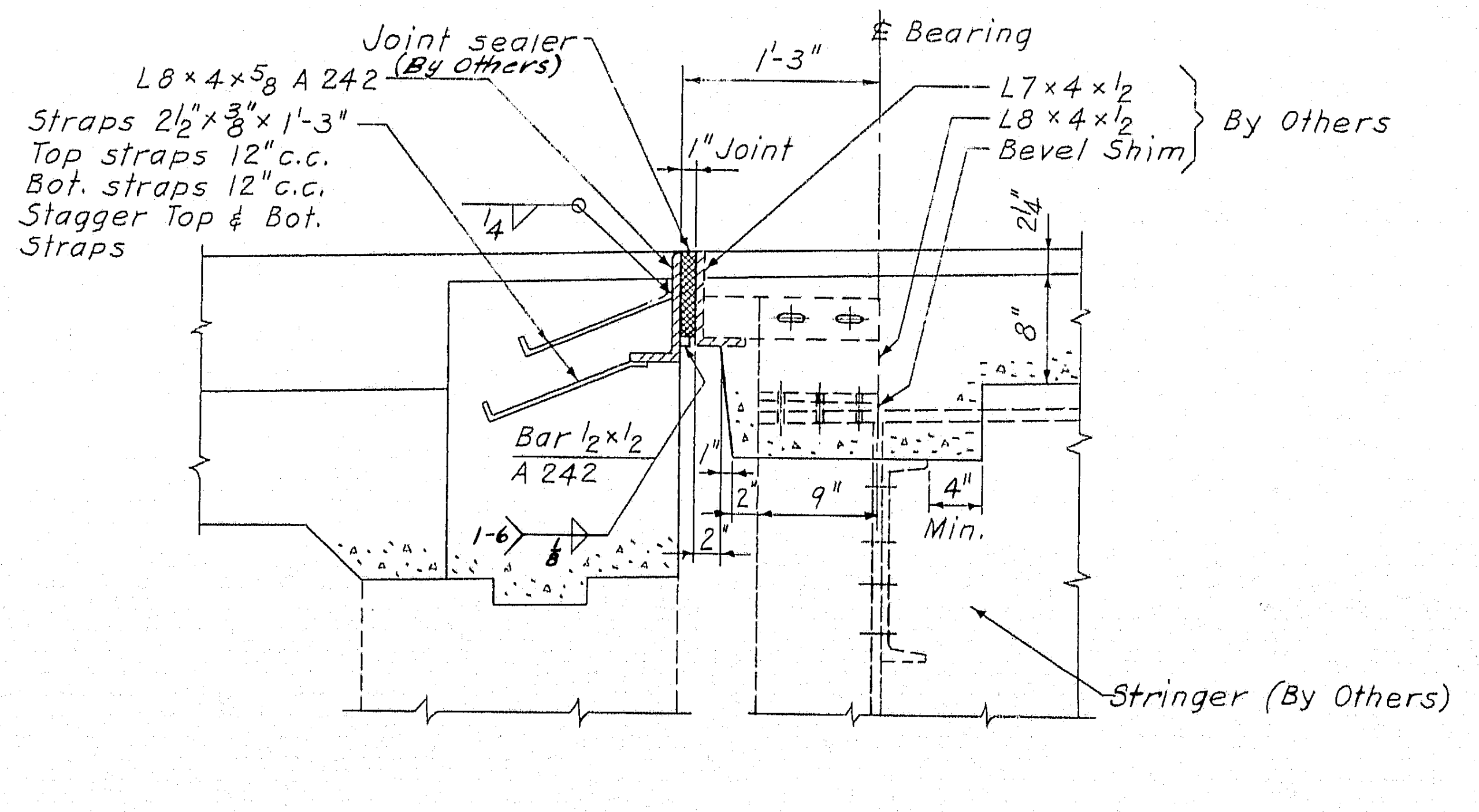
Joint sealer (By Others)
L8×4×5/8 A 242
Straps 2 1/2"×3/8"×1'-3"
Top straps 12" c.c.
Bot. straps 12" c.c.
Stagger Top & Bot. Straps
1'-3"
℄ Bearing
1" Joint
L7×4×1/2
L8×4×1/2
Bevel Shim
By Others
1/4
2 1/4"
8"
Bar 1/2×1/2 A 242
1"
2"
9"
4" Min.
2"
1-6
1/8
Stringer (By Others)

JOINT DETAIL AT ABUTMENTS

Scale: 1"=1'-0"

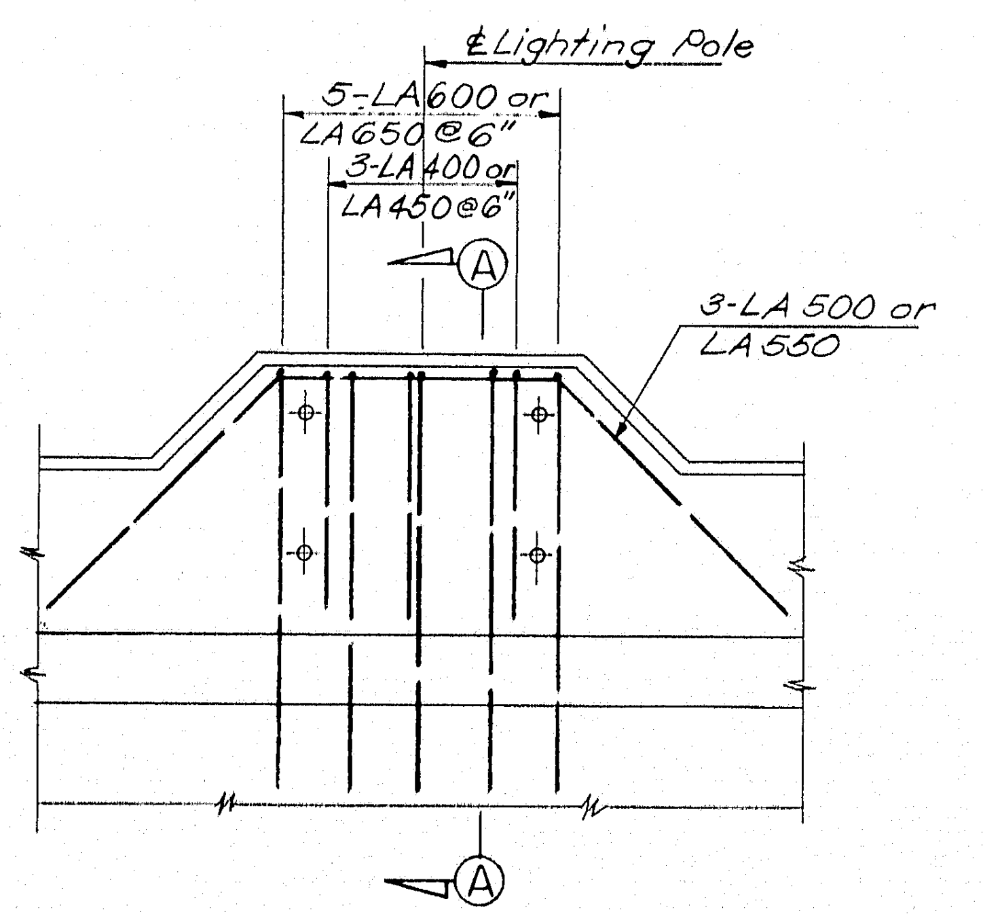
℄ Lighting Pole
5-LA 600 or LA 650 @ 6"
3-LA 400 or LA 450 @ 6"
A
3-LA 500 or LA 550

PLAN

LIGHTING POLE PLATFORM

Scale: 3/4"=1'-0"

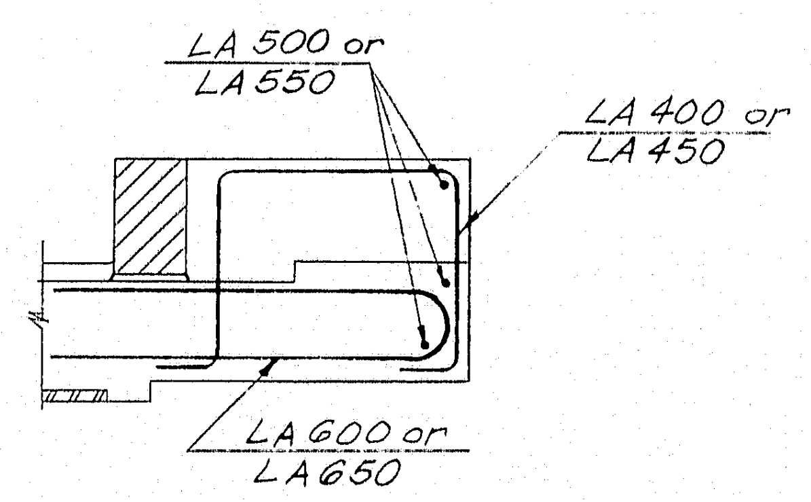
LA 500 or LA 550
LA 400 or LA 450
LA 600 or LA 650

SECTION A-A

Scale: 3/4"=1'-0"

4

DESIGN – S. D[illegible]
TRACE – [illegible]
CHECK – S. [illegible]

BRIDGE NO. IN CHARGE OF – R. W. Christie

NEW HAMPSHIRE
DEPARTMENT OF PUBLIC WORKS AND HIGHWAYS
AND
MAINE STATE HIGHWAY COMMISSION
INTERSTATE 95 BRIDGE
OVER
PISCATAQUA RIVER
BETWEEN
PORTSMOUTH, NEW HAMPSHIRE AND KITTERY, MAINE

HARDESTY & HANOVER
CONSULTING ENGINEERS
NEW YORK, N. Y.

STEEL & CONCRETE DETAILS II

SHEET 33 OF 44

129-84

B. P. R. REG. NO.	STATE	PROJECT NUMBER	SHEET NO.	TOTAL SHEETS
1	MAINE	I-95-1(22)16	34	44

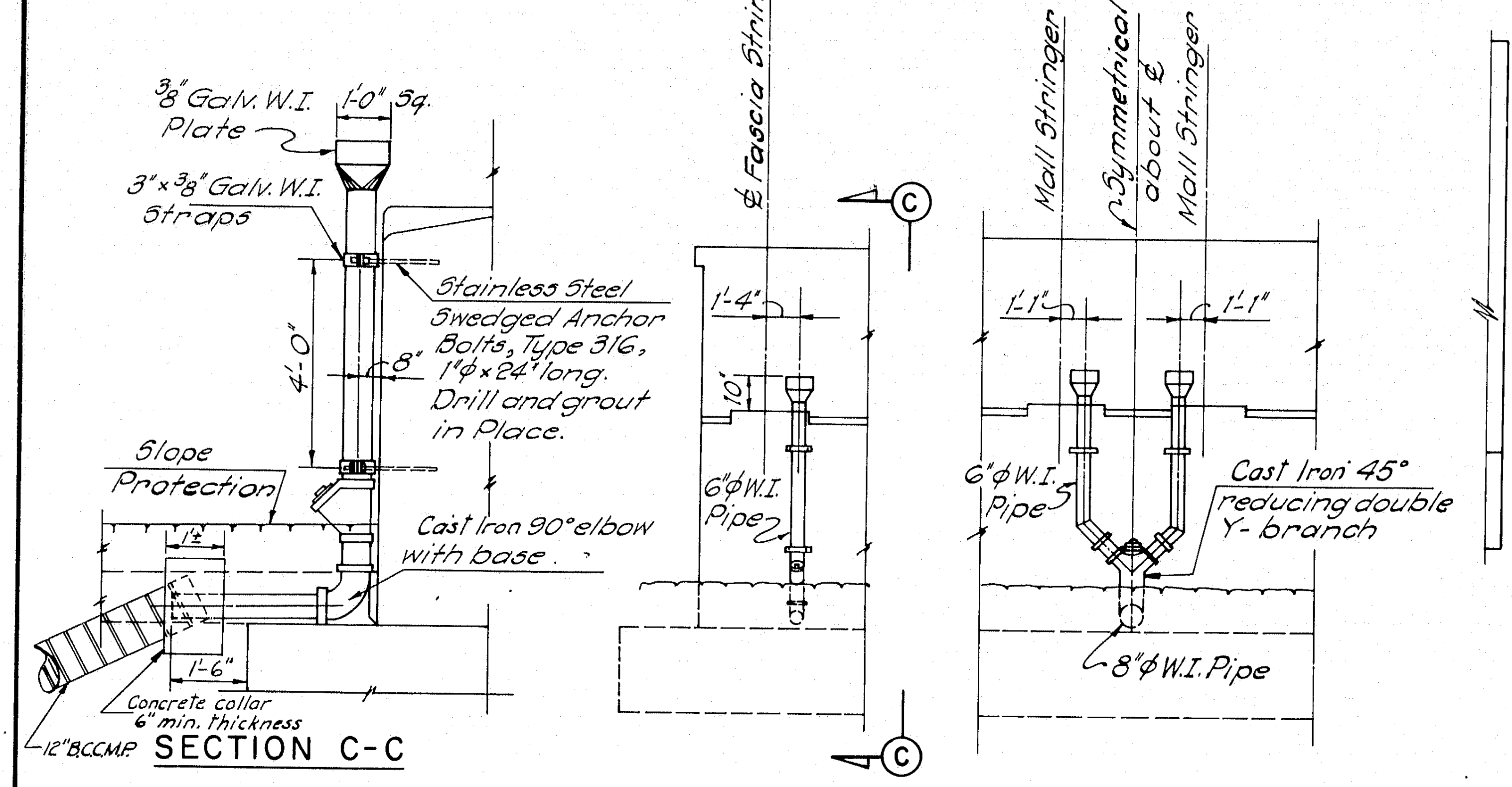
3/8" Galv. W.I. Plate
1'-0" Sq.
3"x3/8" Galv. W.I. Straps
Stainless Steel Swedged Anchor Bolts, Type 316, 1"φ x 24" long. Drill and grout in Place.
4'-0"
8"
Slope Protection
Cast Iron 90° elbow with base.
1'-6"
Concrete collar 6" min. thickness
12" B.C.C.M.P.
℄ Fascia Stringer
1'-4"
10"
6"φ W.I. Pipe
Mall Stringer
Symmetrical about ℄ Mall Stringer
1'-1"
6"φ W.I. Pipe
Cast Iron 45° reducing double Y-branch
8"φ W.I. Pipe
C

SECTION C-C

DRAINAGE AT NORTH ABUTMENT

Items 603.84 & 603.85

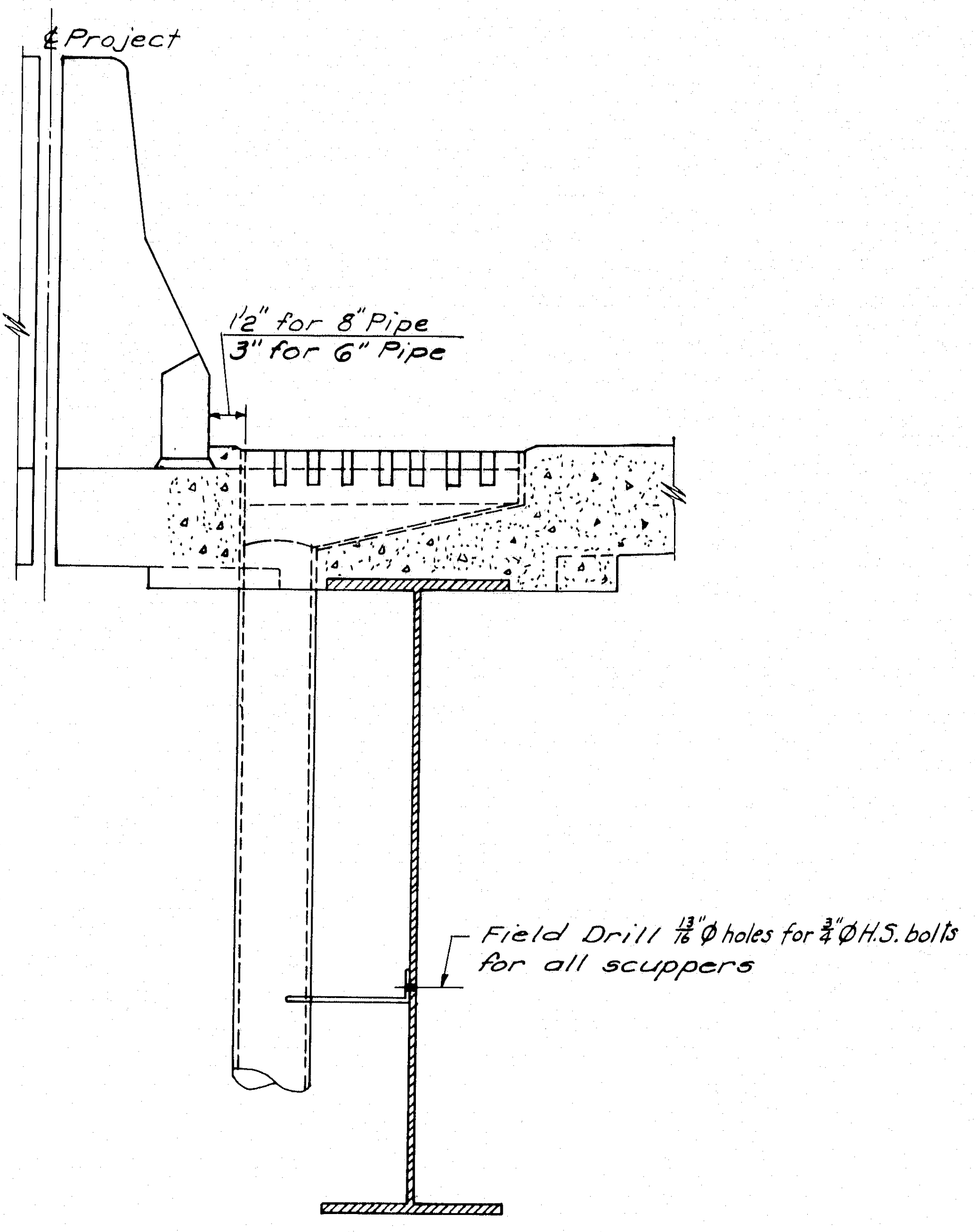
℄ Project
1/2" for 8" Pipe
3" for 6" Pipe
Field Drill 13/16"φ holes for 3/4"φ H.S. bolts for all scuppers

DETAIL AT MEDIAN

Scale: 1"=1'-0"

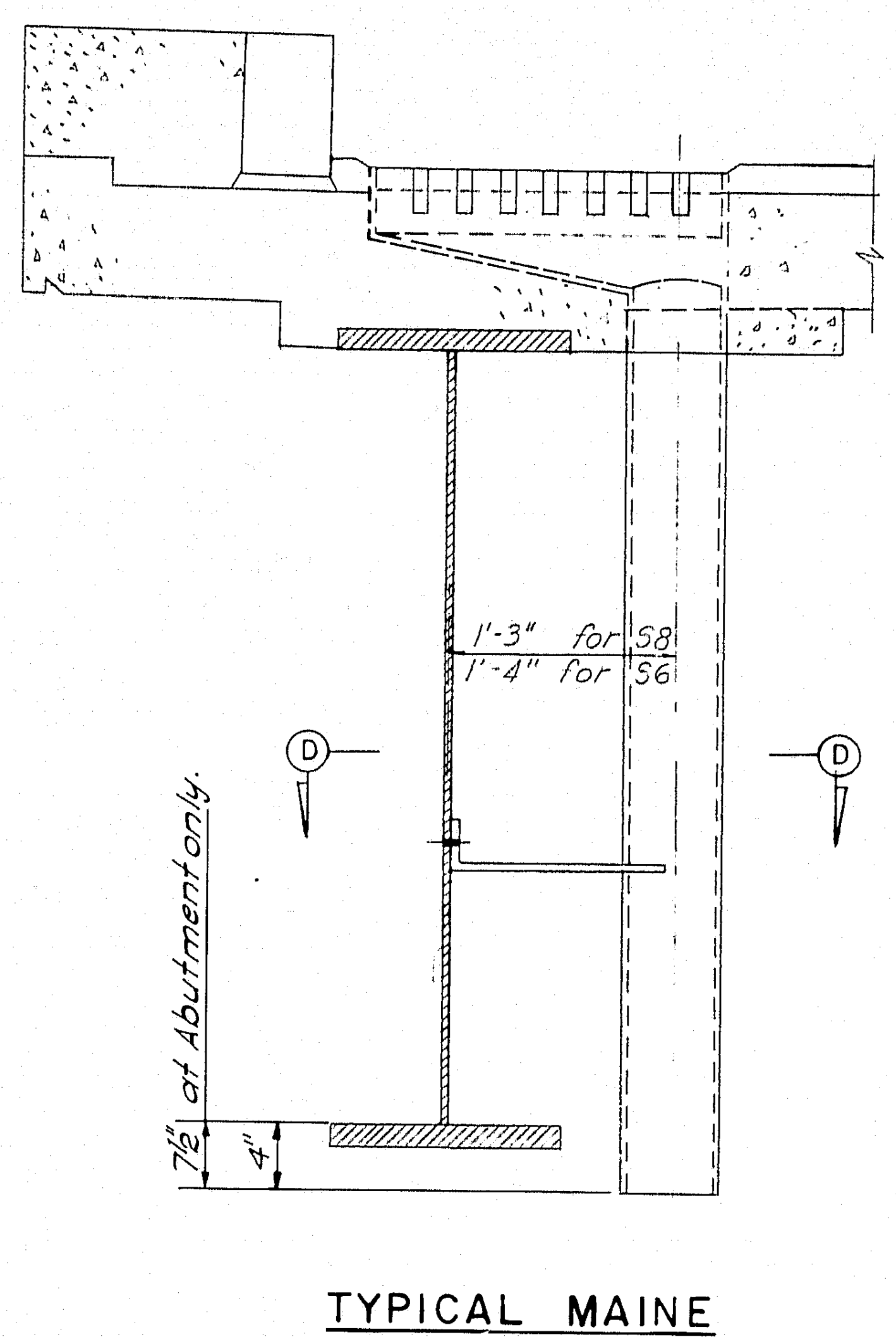
1'-3" for S8
1'-4" for S6
D
7 1/2" at Abutment only.
4"

TYPICAL MAINE APPROACH SPANS

Scale: 1"=1'-0"

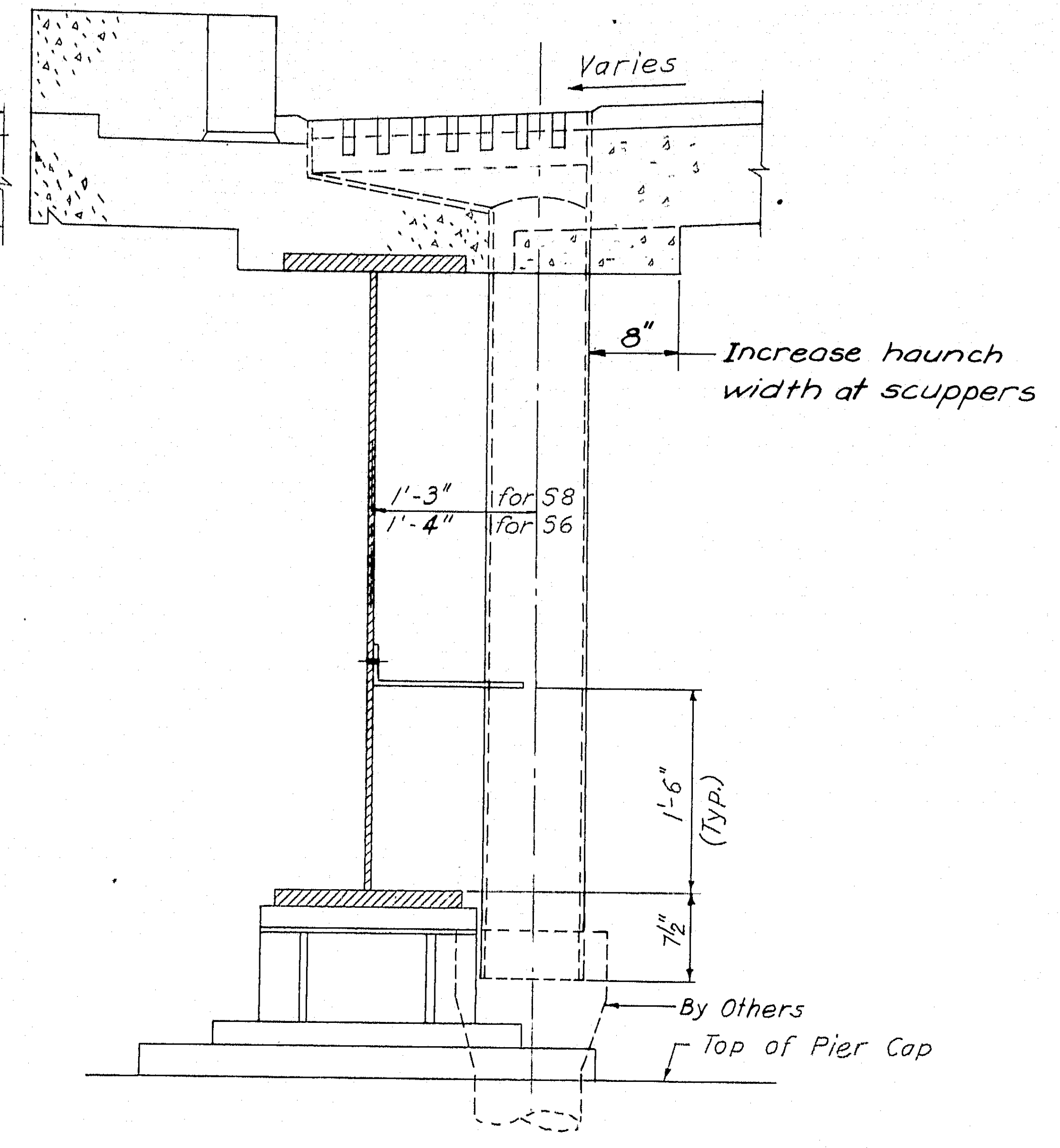
Varies
8"
Increase haunch width at scuppers
1'-3" for S8
1'-4" for S6
1'-6" (Typ.)
7 1/2"
By Others
Top of Pier Cap

TYPICAL N. H. APPROACH SPANS

Scale: 1"=1'-0"

Piers 18S, 17S, 1S - 6"φ Pipe
Piers 15S, 11S, 10S, 6S, 2S - 8"φ Pipe
Piers 16S, 13S, 8S, 4S - see detail below

See Sheets 5 & 6 for Horizontal Location

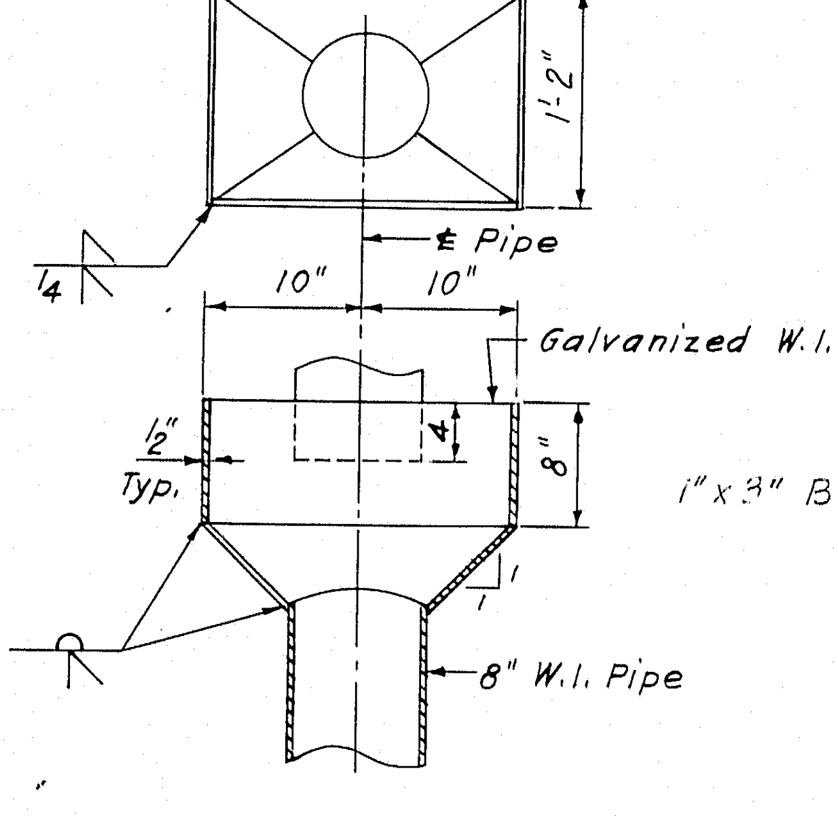
1'-8"
1'-2"
℄ Pipe
10"
10"
Galvanized W.I.
1/2" Typ.
1/4
8"
8" W.I. Pipe

DETAIL "D"

Scale: 1"=1'-0"

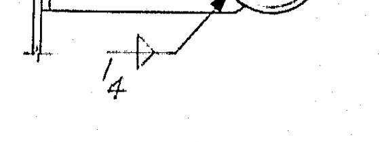
7"x1/2" Bent ℞
1/4

SECTION D-D

Scale: 1"=1'-0"

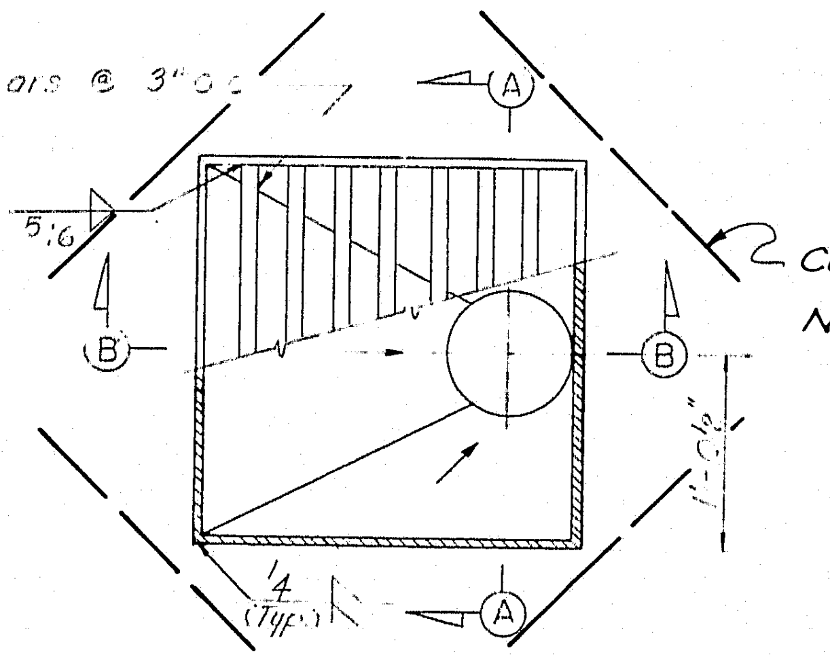
1"x3" Bars @ 3" o.c.
5/16
A
B
1'-0 1/2"
1/4 (Typ.)
Corner reinforcing

SCUPPER DETAIL

Galv. W.I.

Scale: 1"=1'-0"

Note: Cut longitudinal & transverse reinforcing to clear scuppers, & use them as corner reinforcing. in the plane of the main reinforcing mats.

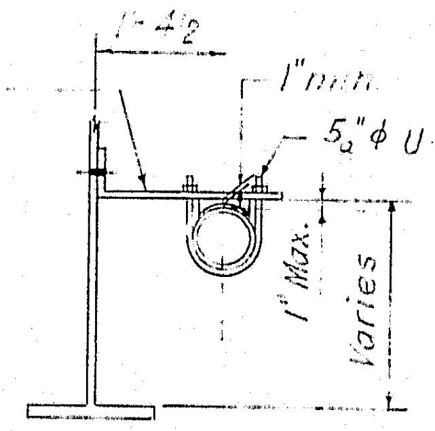
7"x1/2" Bent ℞
1'-4 1/2"
1" min.
5/8"φ U-Bolt (Galv.)
1" Max.
Varies
℄ Pier Cap

SECTION C-C

Scale: 1/2"=1'-0"

2-3/8"x1" holes each @ 9" on each side of the scupper. Bottom of the holes 3/16" above the concrete deck.

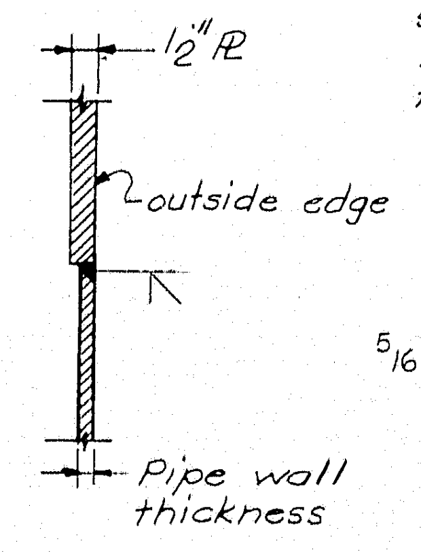
1/2" ℞
outside edge
Pipe wall thickness

DETAIL "A"

Scale: 3"=1'-0"

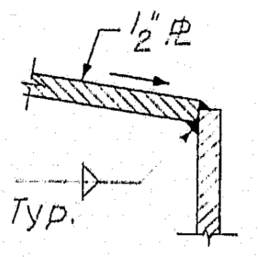

DETAIL "B"

Scale: 3"=1'-0"

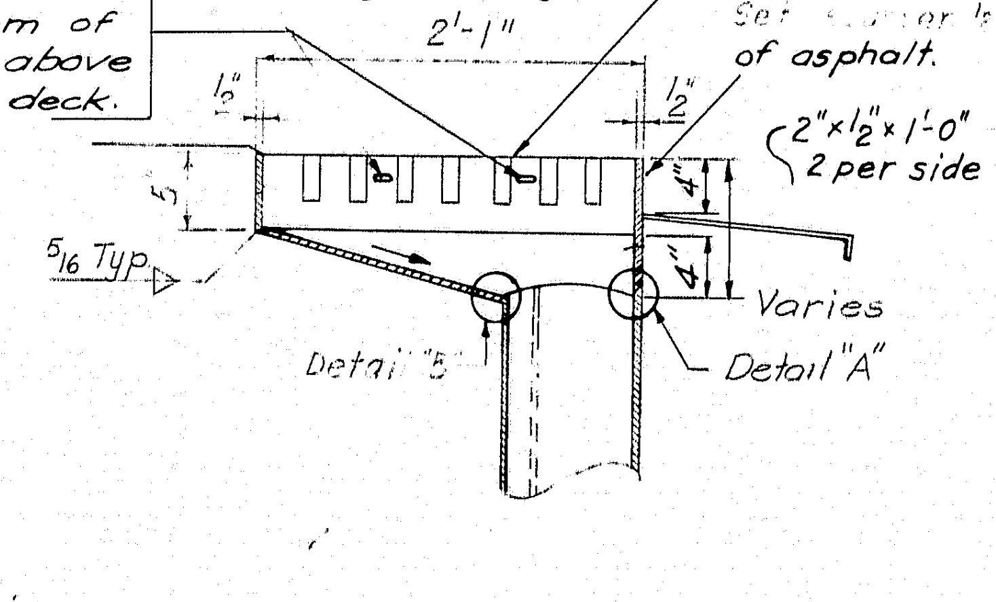
1/4
Slope to suit deck geometry. Set scupper 1/2" below level of asphalt.
2'-1"
1/2"
1/2"
5"
5/16 Typ.
2"x1/2"x1'-0" 2 per side
4"
4"
Varies
Detail "B"
Detail "A"

SECTION B-B

Scale: 1"=1'-0"

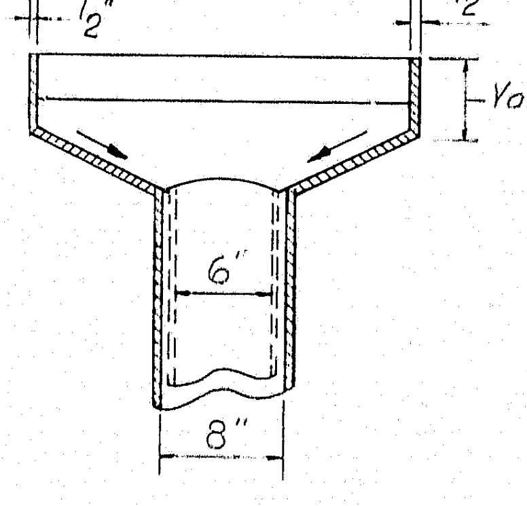
2'-1"
1/2"
1/2"
Varies
6"
8"

SECTION A-A

Scale: 1"=1'-0"

Note: S6 used for 6"φ W.I. Pipe
S8 used for 8"φ W.I. Pipe
Threaded Galvanized Cast Iron Drainage Fittings shall conform to ASA B16.12.

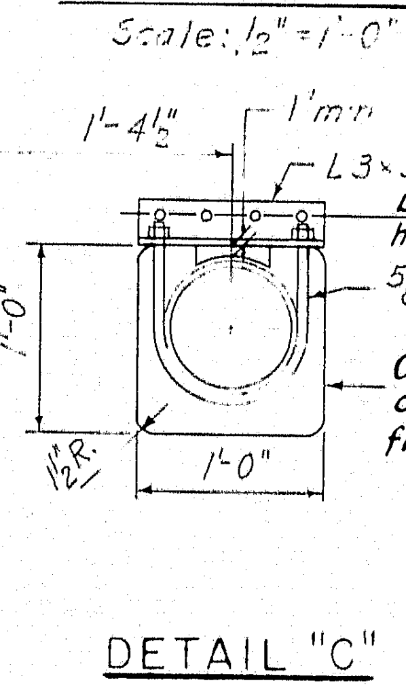
1'-4 1/2"
1" min.
L 3x3x1/2
Drill matching holes in crossbeam
5/8"φ U-Bolt (Galv.)
Cutout in crossbeam cut in field and grind smooth
℄ Stringer
1'-0"
1'-0"
1 1/2" R.

DETAIL "C"

Scale: 1"=1'-0"

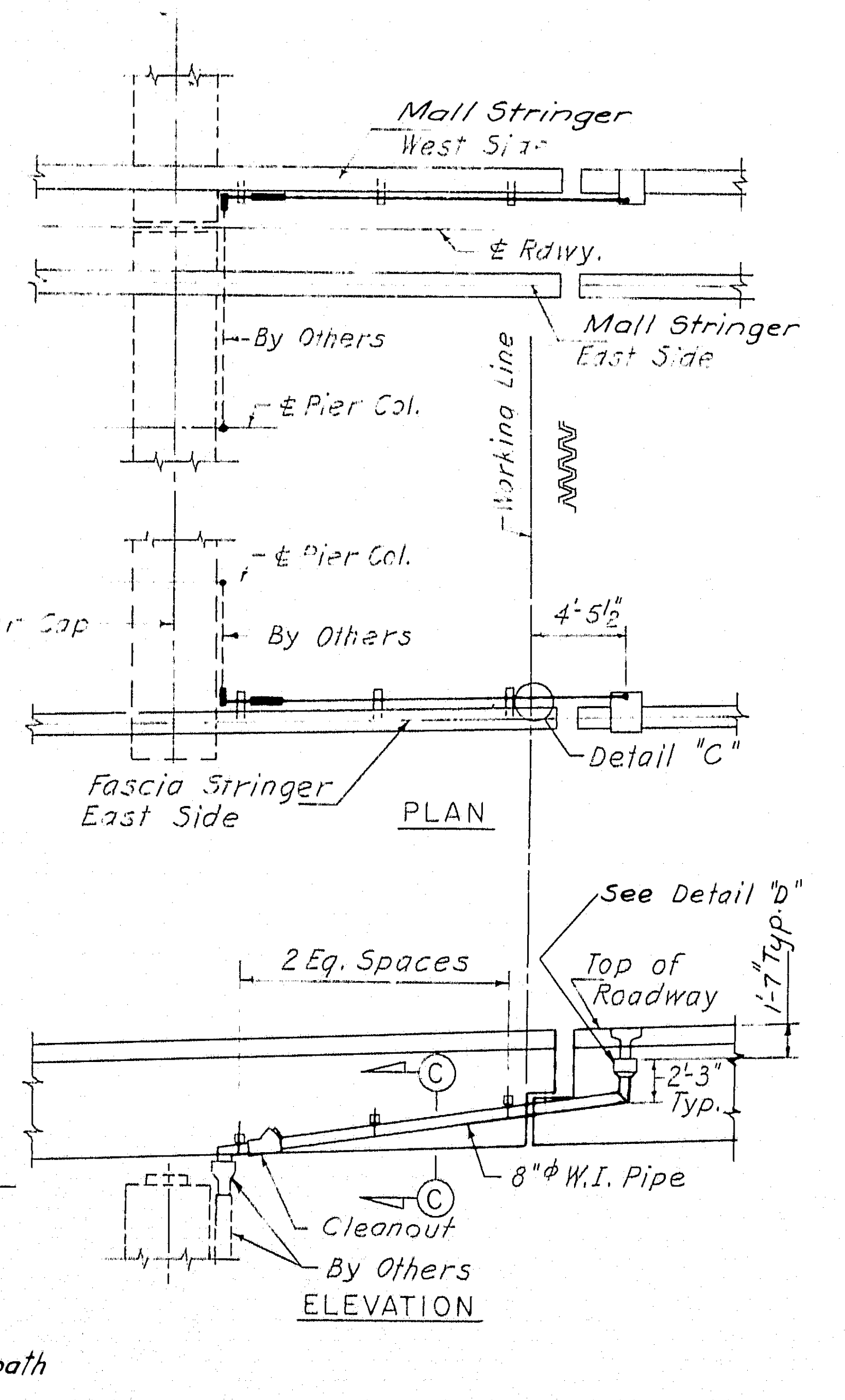
Mall Stringer West Side
℄ Rdwy.
Mall Stringer East Side
By Others
℄ Pier Col.
Working Line
℄ Pier Cap
4'-5 1/2"
Detail "C"
Fascia Stringer East Side
PLAN
See Detail "D"
2 Eq. Spaces
Top of Roadway
1'-7" Typ.
2'-3" Typ.
C
8"φ W.I. Pipe
Cleanout
By Others
ELEVATION

PIER 16S

Scale: 1/8"=1'-0"

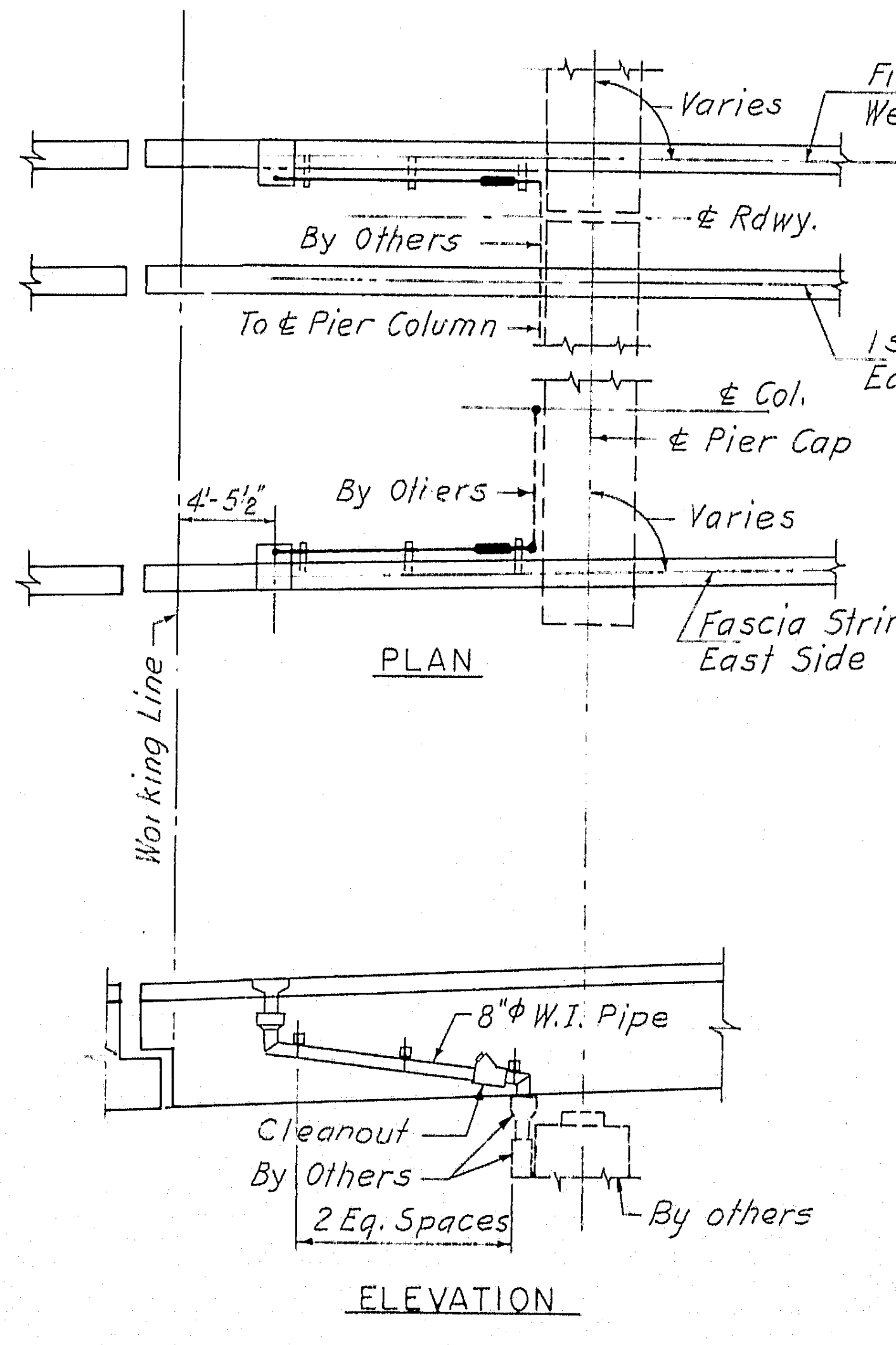
Varies
First Interior Stringer West Side
℄ Rdwy.
By Others
To ℄ Pier Column
1st. Interior stringer East Side
℄ Col.
℄ Pier Cap
4'-5 1/2"
By Others
Varies
Fascia Stringer East Side
Working Line
PLAN
8"φ W.I. Pipe
Cleanout
By Others
2 Eq. Spaces
By others
ELEVATION

PIERS 13S, 8S, 4S

Scale: 1/8"=1'-0"

Note: Scuppers, Pipes & Supports to be paid for under Items 502.261 & 502.263.

HARDESTY & HANOVER
CONSULTING ENGINEERS
NEW YORK, N. Y.

4

DESIGN – A. M. Saccia
TRACE – A. K.
CHECK – S. Nishimura

BRIDGE NO. IN CHARGE OF – R. W. Christie

NEW HAMPSHIRE
DEPARTMENT OF PUBLIC WORKS AND HIGHWAYS
AND
MAINE STATE HIGHWAY COMMISSION
INTERSTATE 95 BRIDGE
OVER
PISCATAQUA RIVER
BETWEEN
PORTSMOUTH, NEW HAMPSHIRE AND KITTERY, MAINE

SCUPPERS

SHEET 34 OF 44

129-85

B. P. R. REG. NO.	STATE	PROJECT NUMBER	SHEET NO.	TOTAL SHEETS
1	MAINE	I-95-1(22)16	35	44

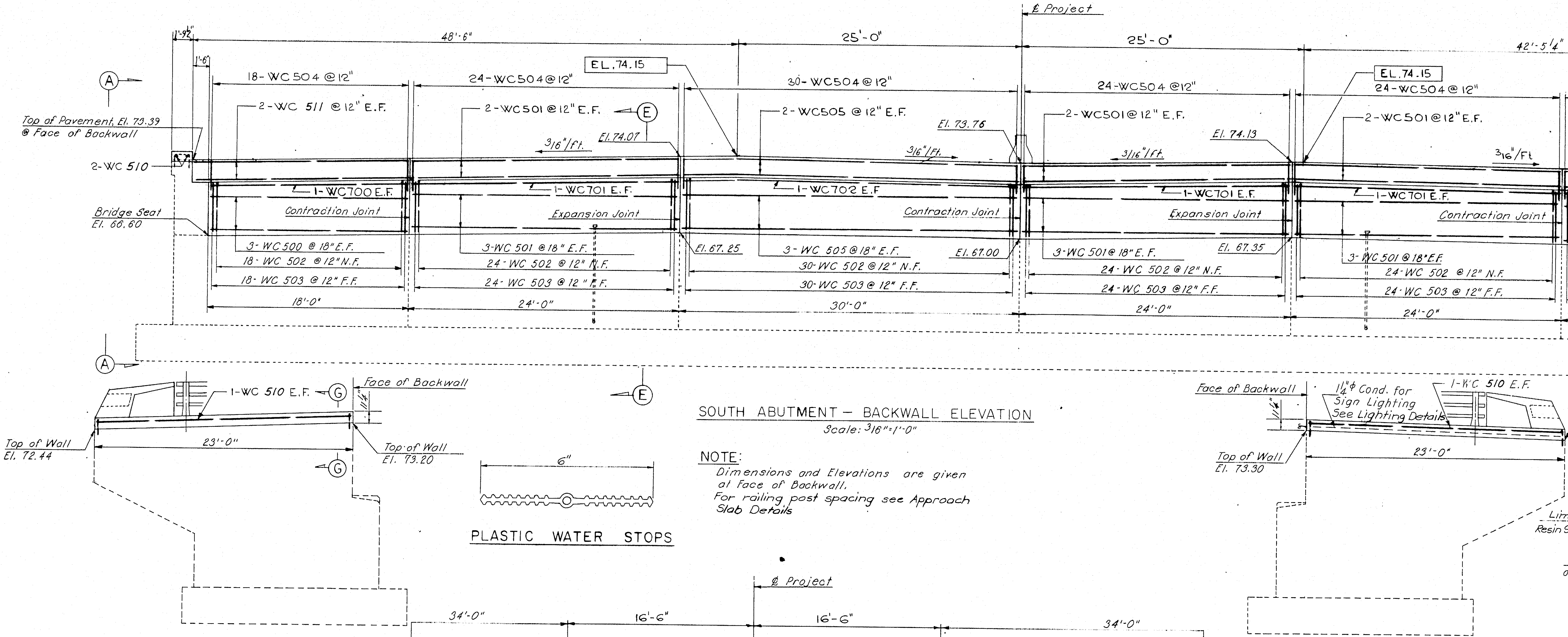
℄ Project
1'-9½"
48'-6"
25'-0"
25'-0"
42'-5¼"
1'-6"
EL. 74.15
18-WC504 @12"
24-WC504@12"
30-WC504@12"
24-WC504@12"
24-WC504@12"
18-WC 504 @ 12"
2-WC 511 @12" E.F.
2-WC501@12" E.F.
2-WC505 @ 12" E.F.
2-WC501@ 12" E.F.
2-WC501@12" E.F.
2-WC 511 @12" E.F.
Top of Pavement, El. 73.39 @ Face of Backwall
Top of Pavement, El. 73.49 @ Face of Backwall
Conduit
El. 74.07
El. 73.76
El. 74.13
3/16"/Ft.
2-WC 510
1-WC700 E.F.
1-WC701 E.F.
1-WC702 E.F.
Bridge Seat El. 66.60
Bridge Seat El. 66.70
Contraction Joint
Expansion Joint
El. 67.25
El. 67.00
El. 67.35
3-WC 500 @ 18" E.F.
18-WC 502 @ 12" N.F.
18-WC 503 @ 12" F.F.
3-WC 501 @ 18" E.F.
24-WC 502 @ 12" N.F.
24-WC 503 @ 12" F.F.
3-WC 505 @ 18" E.F.
30-WC 502 @ 12" N.F.
30-WC 503 @ 12" F.F.
18'-0"
24'-0"
30'-0"
17'-11¼"
A
B
E
G
1-WC 510 E.F.
Face of Backwall
Top of Wall El. 72.44
Top of Wall El. 73.20
23'-0"
1¼"
1¼"φ Cond. for Sign Lighting See Lighting Details
1-WC 510 E.F.
Top of Wall El. 72.54
Top of Wall El. 73.30
6"

SOUTH ABUTMENT – BACKWALL ELEVATION

Scale: 3/16" = 1'-0"

NOTE:
Dimensions and Elevations are given at face of Backwall.
For railing post spacing see Approach Slab Details

PLASTIC WATER STOPS

VIEW A-A

VIEW B-B

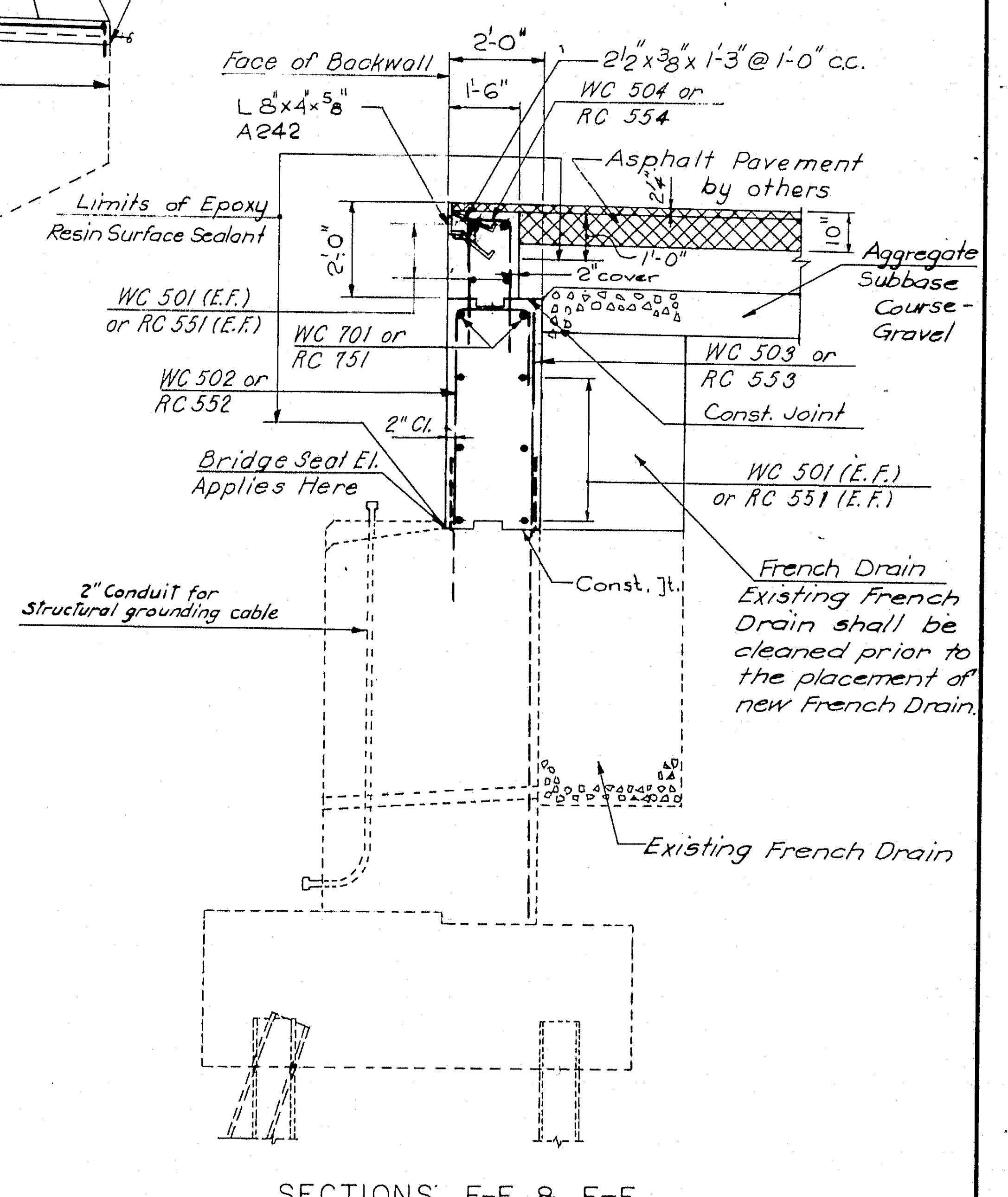
Face of Backwall
2'-0"
1'-6"
2½"x⅜"x 1'-3" @ 1'-0" cc.
L 8x4x⅝" A242
WC 504 or RC 554
Asphalt Pavement by others
Limits of Epoxy Resin Surface Sealant
2'-0"
1'-0"
10"
2" cover
Aggregate Subbase Course-Gravel
WC 501 (E.F.) or RC 551 (E.F.)
WC 701 or RC 751
WC 503 or RC 553
WC 502 or RC 552
Const. Joint
2" Cl.
Bridge Seat El. Applies Here
WC 501 (E.F.) or RC 551 (E.F.)
French Drain
Existing French Drain shall be cleaned prior to the placement of new French Drain.
2" Conduit for Structural grounding cable
Const. Jt.
Existing French Drain

SECTIONS E-E & F-F

Scale: 3/8" = 1'-0"

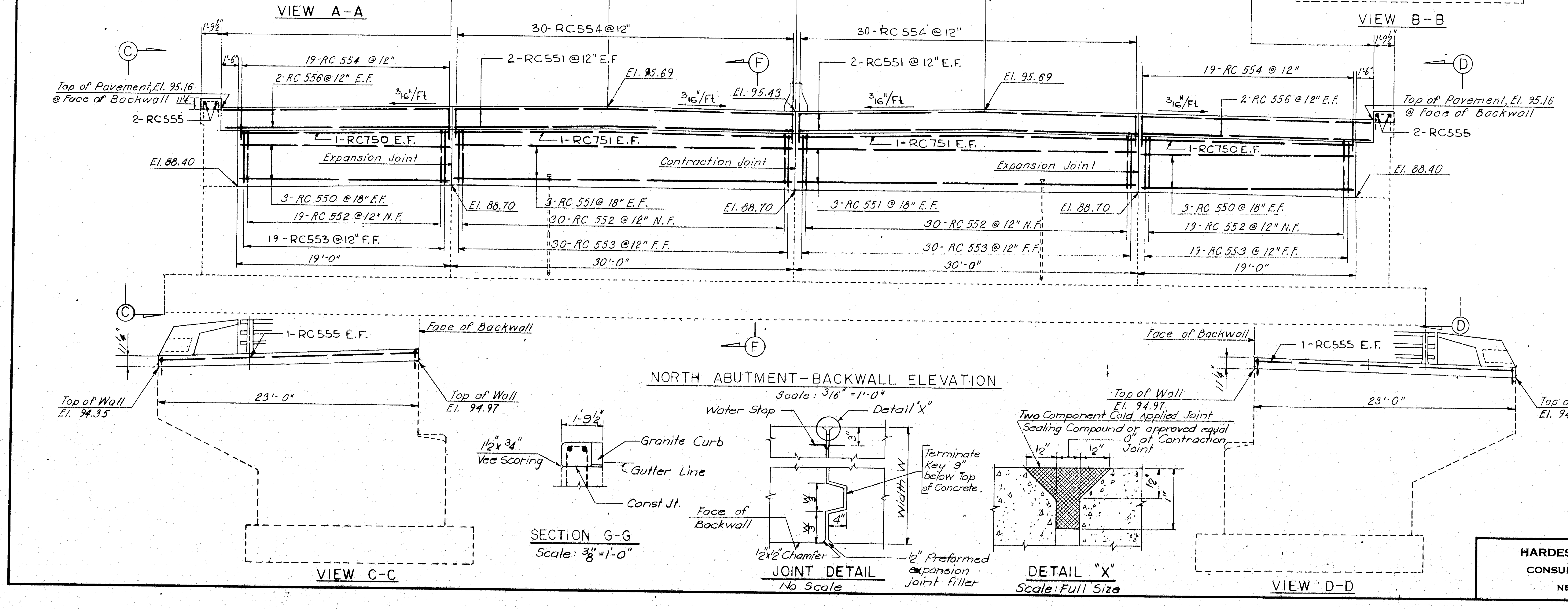
℄ Project
34'-0"
16'-6"
16'-6"
34'-0"
1'-9½"
1'-6"
30-RC554@12"
30-RC 554 @ 12"
19-RC 554 @12"
19-RC 554 @ 12"
2-RC551 @12" E.F.
2-RC551 @ 12" E.F.
2-RC 556@ 12" E.F.
2-RC 556 @ 12" E.F.
El. 95.69
El. 95.43
3/16"/Ft.
Top of Pavement, El. 95.16 @ Face of Backwall
Top of Pavement, El. 95.16 @ Face of Backwall
2-RC555
1-RC750 E.F.
1-RC751 E.F.
El. 88.40
Expansion Joint
Contraction Joint
El. 88.70
3-RC 550 @ 18" E.F.
19-RC 552 @ 12" N.F.
19-RC553 @ 12" F.F.
3-RC 551 @ 18" E.F.
30-RC 552 @ 12" N.F.
30-RC 553 @ 12" F.F.
19'-0"
30'-0"
C
D
F
1-RC555 E.F.
Face of Backwall
Top of Wall El. 94.35
Top of Wall El. 94.97
23'-0"
1¼"
1'-9½"
1½"x¾" Vee Scoring
Granite Curb
Gutter Line
Const. Jt.
Water Stop
Detail "X"
Terminate Key 9" below Top of Concrete.
Width W
Face of Backwall
½"x½" Chamfer
½" Preformed expansion joint filler
Two Component Cold Applied Joint Sealing Compound or approved equal
0" at Contraction Joint
½"
1½"

NORTH ABUTMENT – BACKWALL ELEVATION

Scale: 3/16" = 1'-0"

VIEW C-C

SECTION G-G

Scale: 3/8" = 1'-0"

JOINT DETAIL

No Scale

DETAIL "X"

Scale: Full Size

VIEW D-D

HARDESTY & HANOVER
CONSULTING ENGINEERS
NEW YORK, N. Y.

4

DESIGN – S.D.
TRACE – J. Burke
CHECK – N. Ugander Bilek

BRIDGE NO.
IN CHARGE OF – R.W. Christie

NEW HAMPSHIRE
DEPARTMENT OF PUBLIC WORKS AND HIGHWAYS
AND
MAINE STATE HIGHWAY COMMISSION
INTERSTATE 95 BRIDGE
OVER
PISCATAQUA RIVER
BETWEEN
PORTSMOUTH, NEW HAMPSHIRE AND KITTERY, MAINE

ABUTMENT BACKWALLS

SHEET 35 OF 44

129-86

B. P. R. REG. NO.	STATE	PROJECT NUMBER	SHEET NO.	TOTAL SHEETS
1	MAINE	I-95-1 (22) 16	36	44

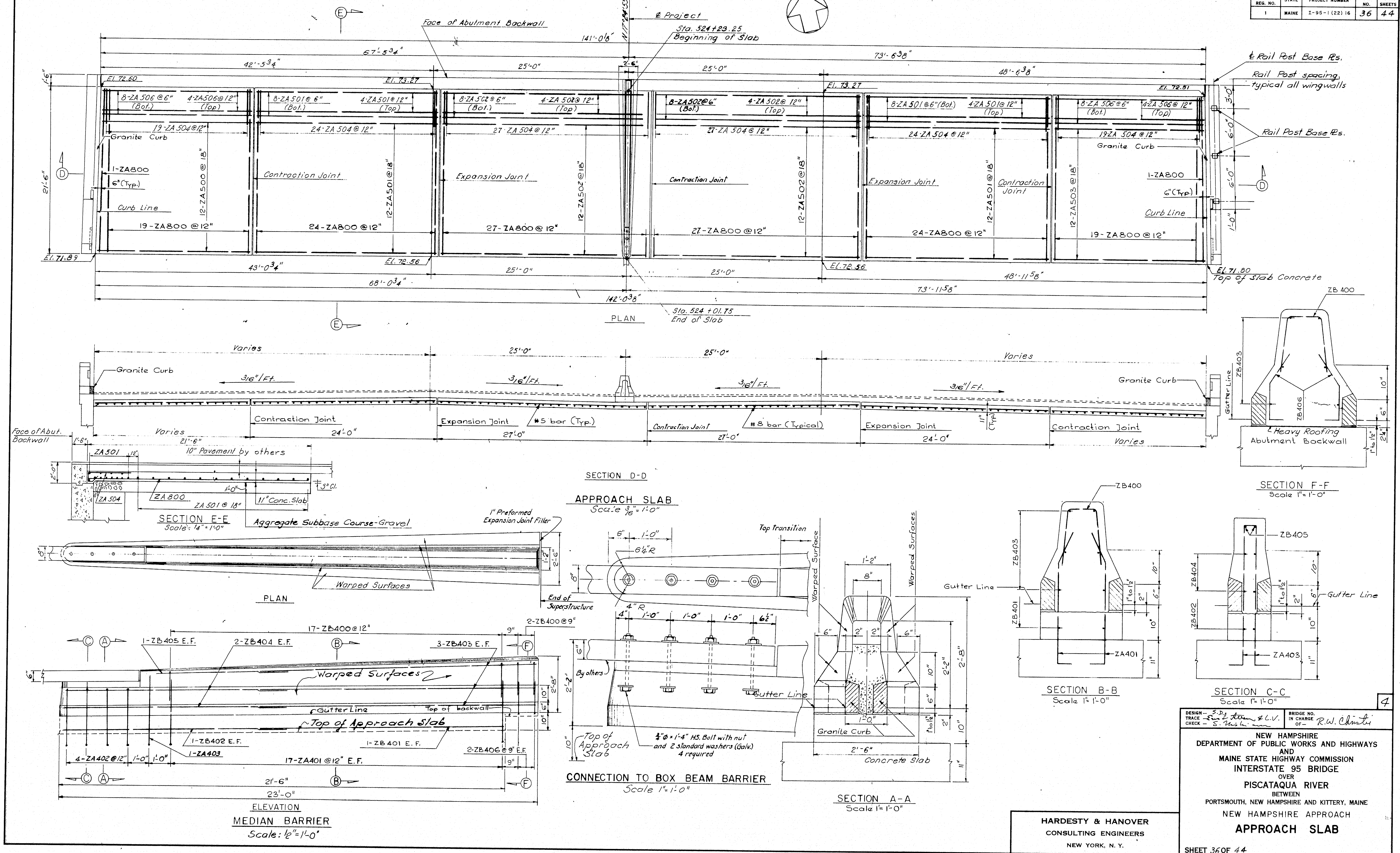

Face of Abutment Backwall
℄ Project
N17°24'55"E
Sta. 524+23.25
Beginning of Slab
141'-0⅛"
67'-5¾"
73'-6⅜"
42'-5¾"
25'-0"
2'-6"
25'-0"
48'-6⅜"
℄ Rail Post Base Pls.
Rail Post spacing, typical all wingwalls
Rail Post Base Pls.
El. 72.60
El. 73.27
El. 73.27
El. 72.51
8-ZA506 @ 6" (Bot.)
4-ZA506 @ 12" (Top)
8-ZA501 @ 6" (Bot.)
4-ZA501 @ 12" (Top)
8-ZA502 @ 6" (Bot.)
4-ZA502 @ 12" (Top)
19-ZA504 @ 12"
24-ZA504 @ 12"
27-ZA504 @ 12"
Granite Curb
1-ZA800
6" (Typ.)
Curb Line
Contraction Joint
Expansion Joint
12-ZA500 @ 18"
12-ZA501 @ 18"
12-ZA502 @ 18"
12-ZA503 @ 18"
19-ZA800 @ 12"
24-ZA800 @ 12"
27-ZA800 @ 12"
21'-6"
1'-6"
3'-0"
6'-0"
1'-0"
El. 71.89
El. 72.56
El. 71.80
Top of Slab Concrete
43'-0¾"
68'-0¾"
48'-11⅝"
73'-11⅝"
142'-0⅜"
Sta. 524+01.75
End of Slab

PLAN

Varies
25'-0"
Granite Curb
3/16"/Ft.
Contraction Joint
Expansion Joint
#5 bar (Typ.)
#8 bar (Typical)
11" (Typ.)
24'-0"
27'-0"
Face of Abut. Backwall
ZA501
10" Pavement by others
ZA504
ZA800
ZA501 @ 18"
11" Conc. Slab
3" Cl.
1'-0"
2'-0"

SECTION D-D

APPROACH SLAB

Scale 3/16" = 1'-0"

SECTION E-E

Scale: ¼" = 1'-0"

Aggregate Subbase Course-Gravel

ZB400
ZB403
ZB406
10"
6"
Gutter Line
℄ Heavy Roofing
Abutment Backwall
2¼"
1" to 1½"

SECTION F-F

Scale 1" = 1'-0"

1" Preformed Expansion Joint Filler
Warped Surfaces
1'-2"
2'-6"
End of Superstructure

PLAN

17-ZB400 @ 12"
2-ZB400 @ 9"
1-ZB405 E.F.
2-ZB404 E.F.
3-ZB403 E.F.
Warped Surfaces
Gutter Line
Top of backwall
Top of Approach Slab
1-ZB402 E.F.
1-ZB401 E.F.
1-ZA403
2-ZB406 @ 9" E.F.
4-ZA402 @ 12"
17-ZA401 @ 12" E.F.
21'-6"
23'-0"
2'-8"

ELEVATION

MEDIAN BARRIER

Scale: ½" = 1'-0"

Top transition
6¼"R
4" R
1'-0"
6½"
By others
Top of Approach Slab
¾"⌀ × 1'-4" HS. Bolt with nut and 2 standard washers (Galv.) 4 required

CONNECTION TO BOX BEAM BARRIER

Scale 1" = 1'-0"

Warped Surface
Warped Surfaces
1'-2"
8"
2"
Gutter Line
Granite Curb
1'-0"
2'-6"
Concrete Slab
2'-2"
2'-8"

SECTION A-A

Scale 1" = 1'-0"

ZB400
ZB403
ZB401
Gutter Line
ZA401

SECTION B-B

Scale 1" = 1'-0"

ZB405
ZB404
ZB402
Gutter Line
ZA403

SECTION C-C

Scale 1" = 1'-0"

4

DESIGN — S.D.
TRACE — [illegible] & L.V.
CHECK — S. [illegible]

BRIDGE NO.
IN CHARGE OF — R.W. Christi

NEW HAMPSHIRE
DEPARTMENT OF PUBLIC WORKS AND HIGHWAYS
AND
MAINE STATE HIGHWAY COMMISSION
INTERSTATE 95 BRIDGE
OVER
PISCATAQUA RIVER
BETWEEN
PORTSMOUTH, NEW HAMPSHIRE AND KITTERY, MAINE

NEW HAMPSHIRE APPROACH

APPROACH SLAB

SHEET 36 OF 44

HARDESTY & HANOVER
CONSULTING ENGINEERS
NEW YORK, N. Y.

129-87

B. P. R. REG. NO.	STATE	PROJECT NUMBER	SHEET NO.	TOTAL SHEETS
1	MAINE	I-95-1 (22) 16	37	44

Note: Chamfer exposed edges 3/4".

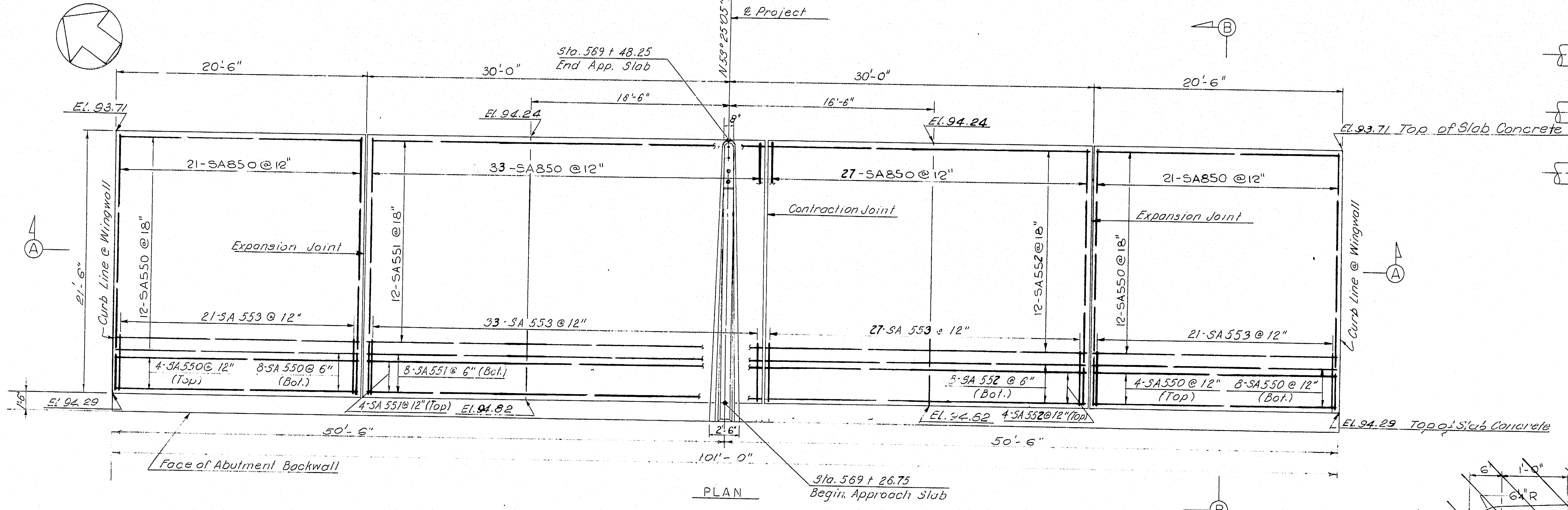

℄ Project
N 53°25'05" E
Sta. 569 + 48.25
End App. Slab
20'-6"
30'-0"
30'-0"
20'-6"
18'-6"
16'-6"
8"
El. 93.71
El. 94.24
El. 94.24
El. 93.71 Top of Slab Concrete
21-SA850 @ 12"
33-SA850 @ 12"
27-SA850 @ 12"
21-SA850 @ 12"
Curb Line @ Wingwall
21'-6"
12-SA550 @ 18"
Expansion Joint
12-SA551 @ 18"
Contraction Joint
12-SA552 @ 18"
12-SA550 @ 18"
Expansion Joint
21-SA 553 @ 12"
33-SA 553 @ 12"
27-SA 553 @ 12"
21-SA 553 @ 12"
4-SA550 @ 12" (Top)
8-SA 550 @ 6" (Bot.)
8-SA551 @ 6" (Bot.)
4-SA 551 @ 12" (Top)
El. 94.82
5-SA 552 @ 6" (Bot.)
El. 94.52
4-SA 552 @ 12" (Top)
4-SA550 @ 12" (Top)
8-SA550 @ 12" (Bot.)
El. 94.29
El. 94.29 Top of Slab Concrete
1'-6"
50'-6"
2'-6"
50'-6"
101'-0"
Face of Abutment Backwall
Sta. 569 + 26.75
Begin Approach Slab
A
B

PLAN

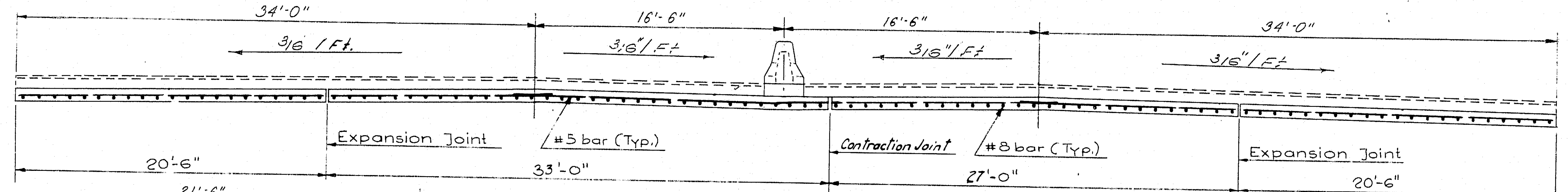

34'-0"
16'-6"
16'-6"
34'-0"
3/16" / Ft.
3/16" / Ft.
3/16" / Ft.
3/16" / Ft.
Expansion Joint
#5 bar (Typ.)
Contraction Joint
#8 bar (Typ.)
Expansion Joint
20'-6"
33'-0"
27'-0"
20'-6"

SECTION A-A

APPROACH SLAB

Scale 3/16" = 1'-0"

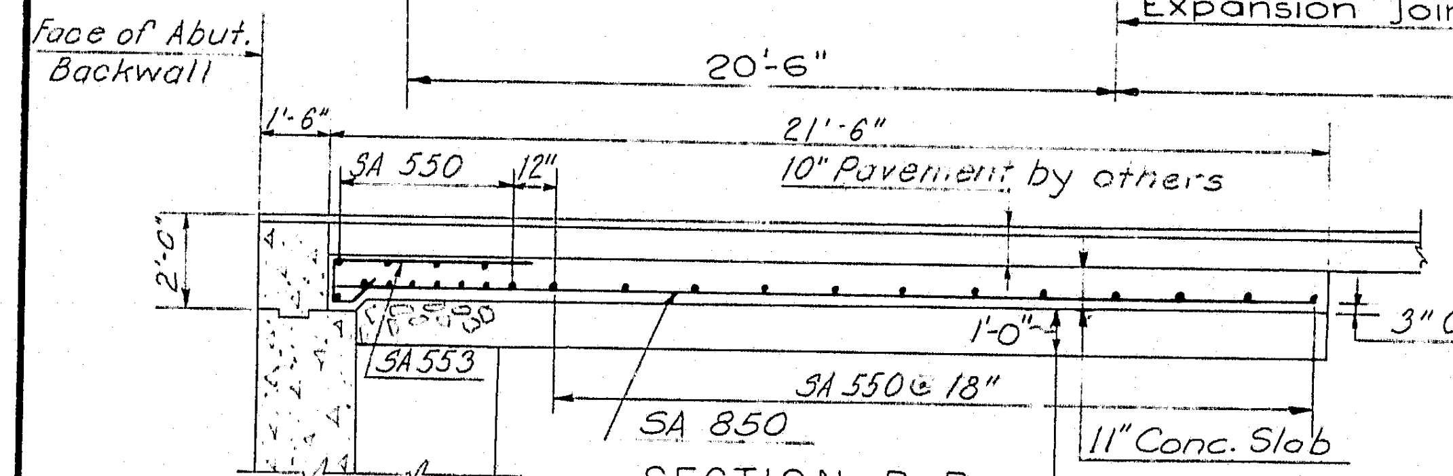

Face of Abut. Backwall
1'-6"
21'-6"
SA 550
12"
10" Pavement by others
2'-0"
1'-0"
3" Cl.
SA553
SA 850
SA 550 @ 18"
11" Conc. Slab
Aggregate Subbase Course-Gravel

SECTION B-B

Scale: 1/4" = 1'-0"

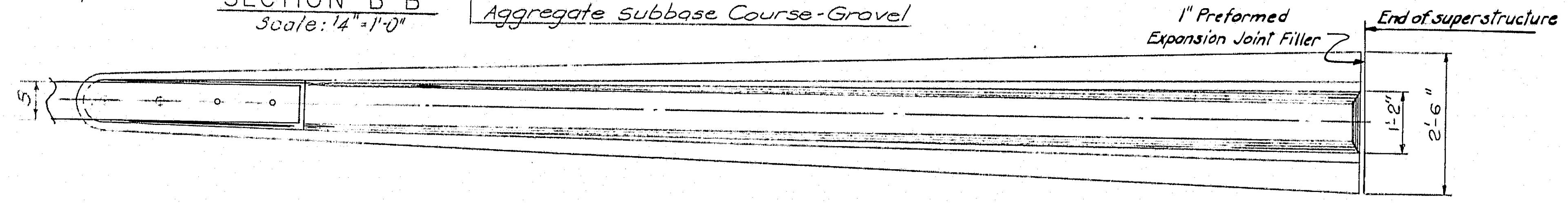

1" Preformed Expansion Joint Filler
End of superstructure
5"
1'-2"
2'-6"

PLAN

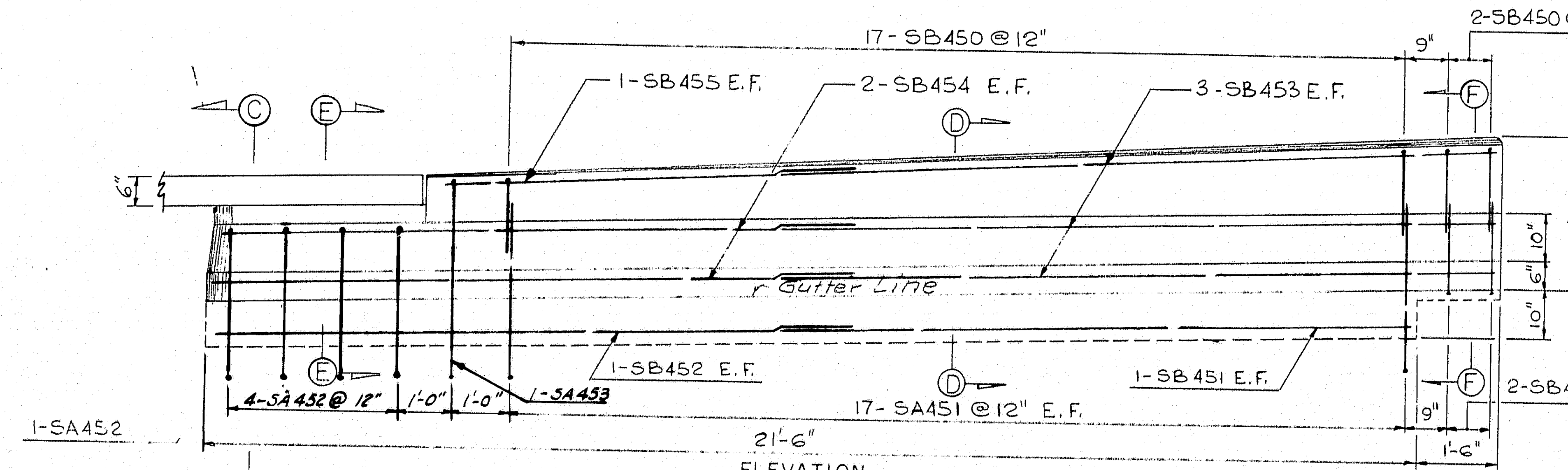

17-SB450 @ 12"
9"
2-SB450 @ 9"
1-SB455 E.F.
2-SB454 E.F.
3-SB453 E.F.
C
E
D
F
6"
2'-8"
10"
6"
10"
Gutter Line
1-SB452 E.F.
1-SB451 E.F.
4-SA452 @ 12"
1'-0"
1'-0"
1-SA453
17-SA451 @ 12" E.F.
2-SB456 @ 9" E.F.
9"
1-SA452
21'-6"
1'-6"

ELEVATION

MEDIAN BARRIER

Scale: 1/2" = 1'-0"

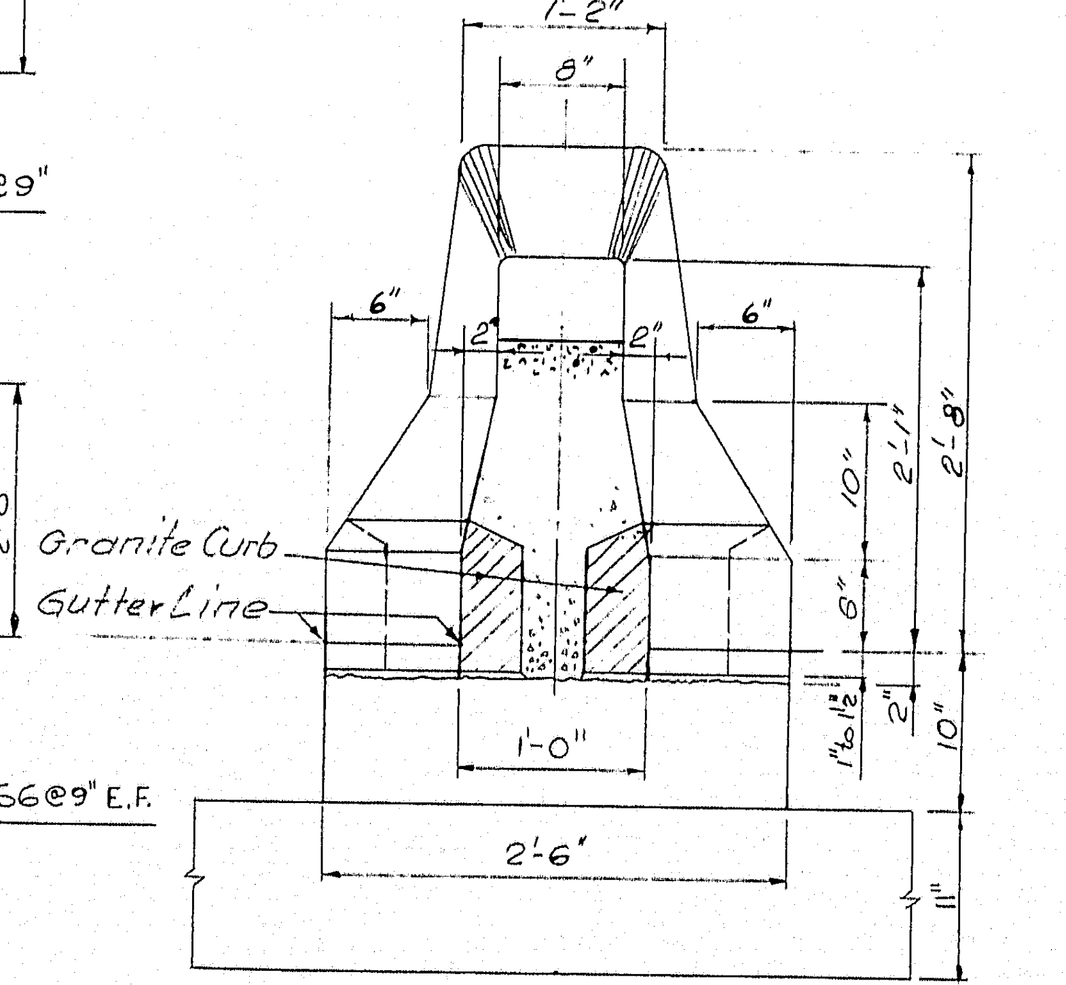

1'-2"
8"
6"
6"
6"
10"
2'-1"
2'-8"
Granite Curb
Gutter Line
6"
1'-0"
1" to 1 1/2"
10"
2'-6"
11"

SECTION E-E

Scale 1" = 1'-0"

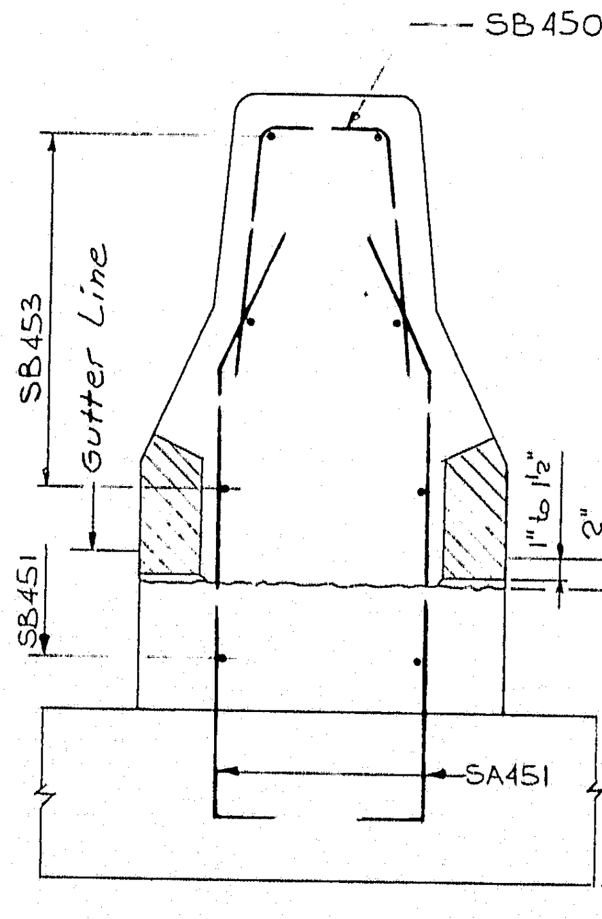

SB450
SB453
Gutter Line
1" to 1 1/2"
2"
SB451
10"
SA451
11"

SECTION D-D

Scale 1" = 1'-0"

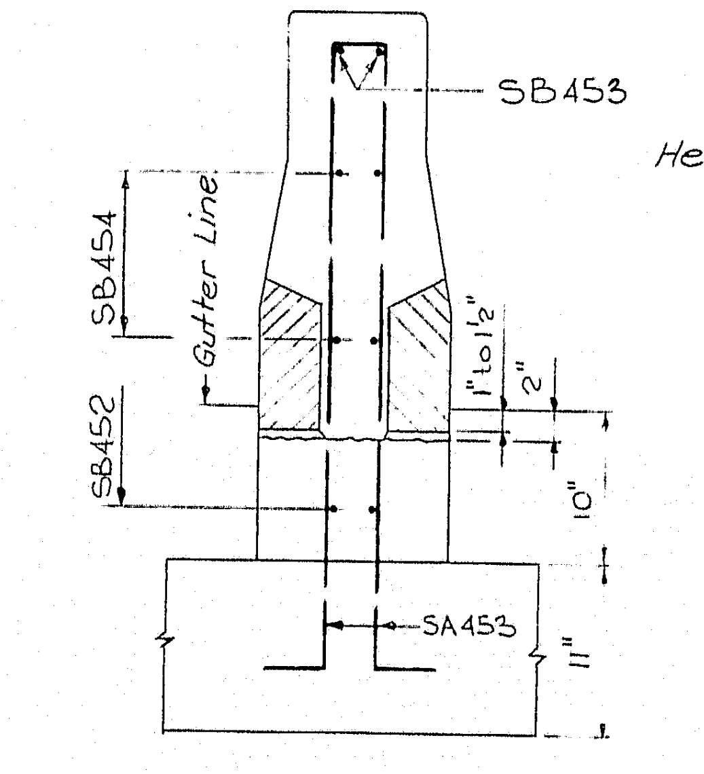

SB453
SB454
Gutter Line
1" to 1 1/2"
2"
SB452
10"
SA453
11"

SECTION C-C

Scale 1" = 1'-0"

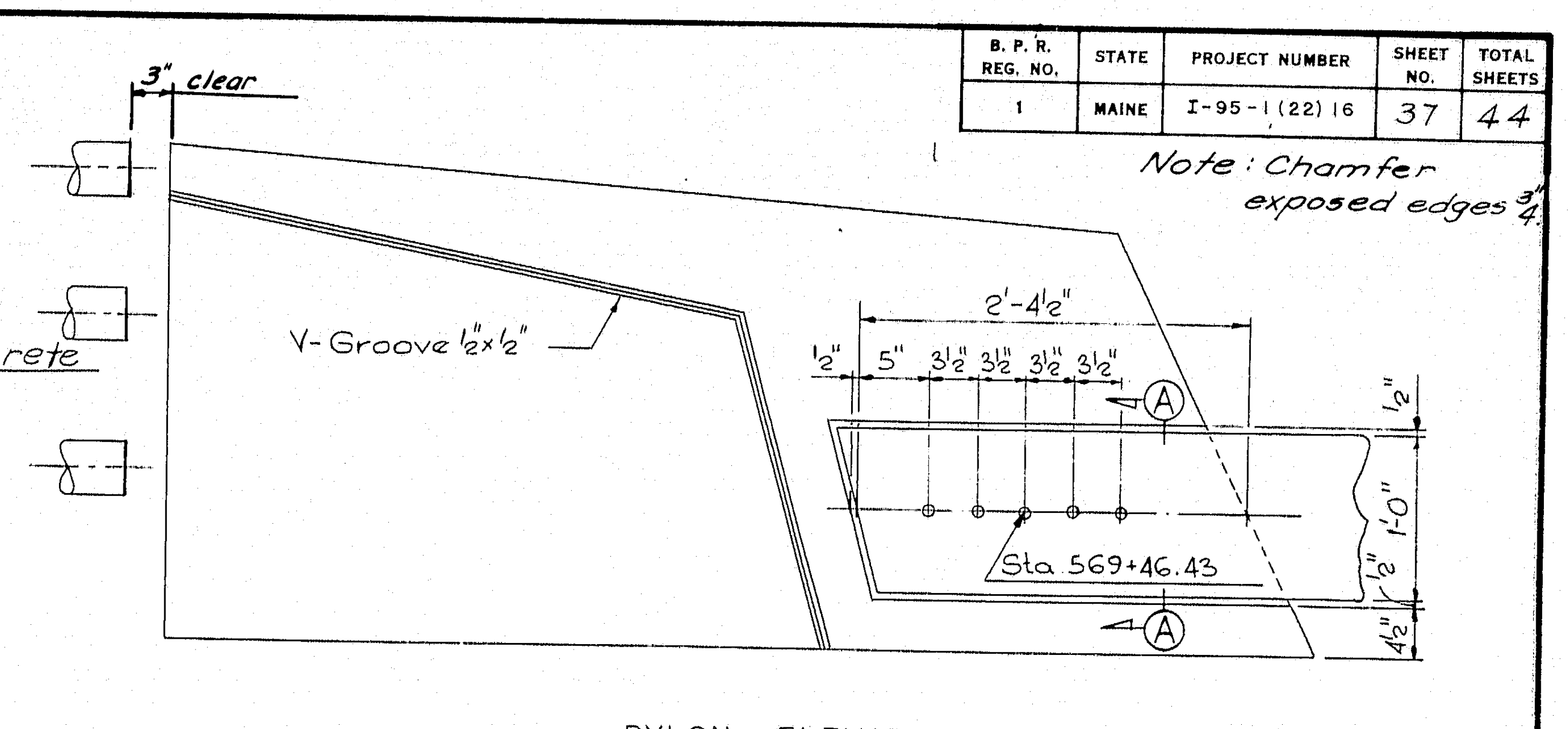

3" clear
V-Groove 1/2" x 1/2"
2'-4 1/2"
1/2"
5"
3 1/2"
3 1/2"
3 1/2"
3 1/2"
A
1/2"
1'-0"
2"
4 1/2"
Sta. 569+46.43
A

PYLON ELEVATION

See Sheet 38 for Section A-A

GUARD RAIL CONNECTION DETAIL

Scale: 1" = 1'-0"

REINFORCING BARS (for one Approach Slab & Barrier)									
Mark	Length	No. req'd	Type	Detail Dimensions A	B	C	D	E	
SA451	3'-6	34	7	0'-10	2'-6	0'-4	to 1 1/2 7 3/4		(2 Sets of 17)
SA452	5'-7	4	8	0'-4	2'-6	0'-3	2'-6	0'-4	
SA453	7'-3	1	8	0'-4	3'-4	0'-3	3'-4	0'-4	
SA550	20'-0	48	Str.						
SA551	32'-6	24	Str.						
SA552	26'-6	24	Str.						
SA553	5'-4"	102	10	4'-0"	0'-7"	0'-3"	0'-9"	12	
SA850	21'-0	102	Str.						
SB450	3'-4 3'-7	19	5	1'-5	0'-6 0'-9	1'-5	1 1/2		
SB451	11'-2	2	Str.						
SB452	11'-2	2	Str.						
SB453	12'-0	6	Str.						
SB454	12'-0	4	Str.						
SB455	8'-0	2	Str.						
SB456	2'-3	4	7	0'-10	1'-1	0'-4	7 3/4"		

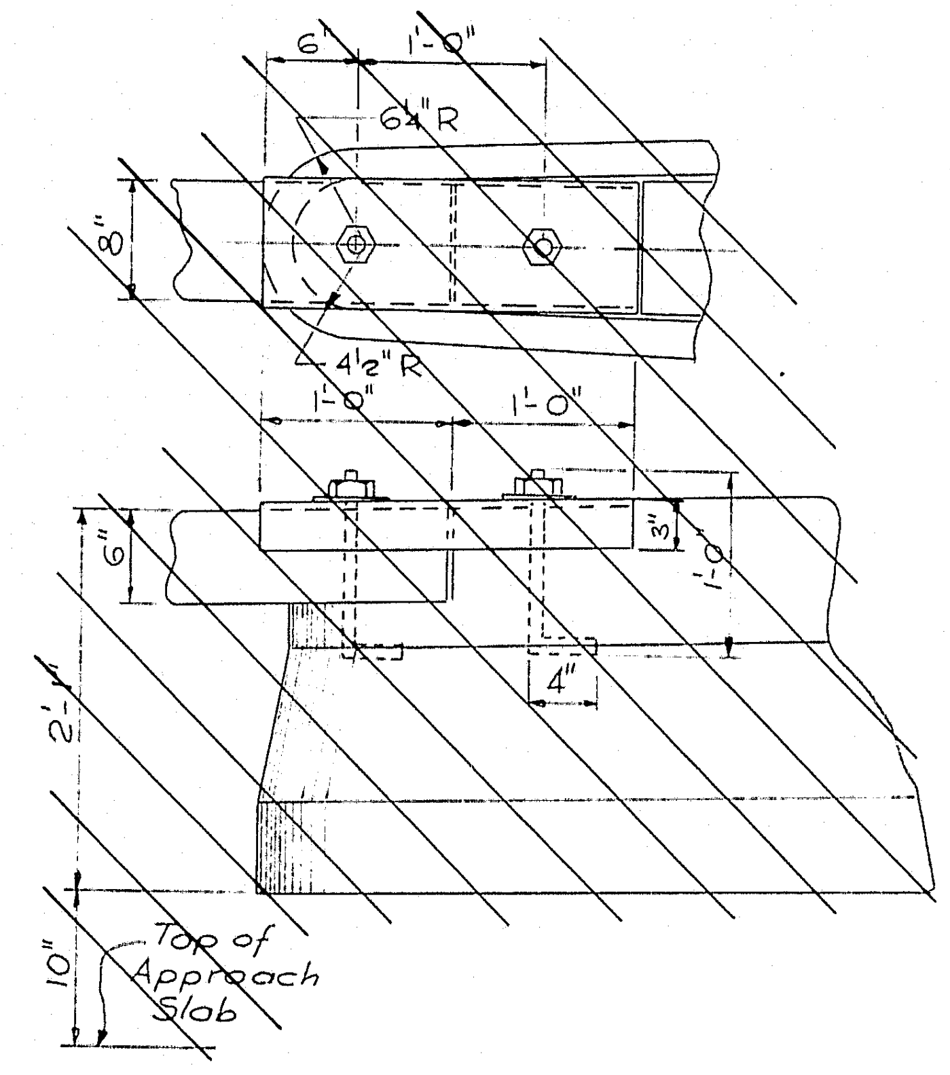

6"
1'-0"
6 1/2" R
8"
4 1/2" R
1'-0"
1'-0"
6"
3"
4"
2'-1"
10"
Top of Approach Slab

~~CONNECTION TO BOX BEAM BARRIER~~

Scale: 1" = 1'-0"

See Sheet No. 36 for connection to box beam barrier

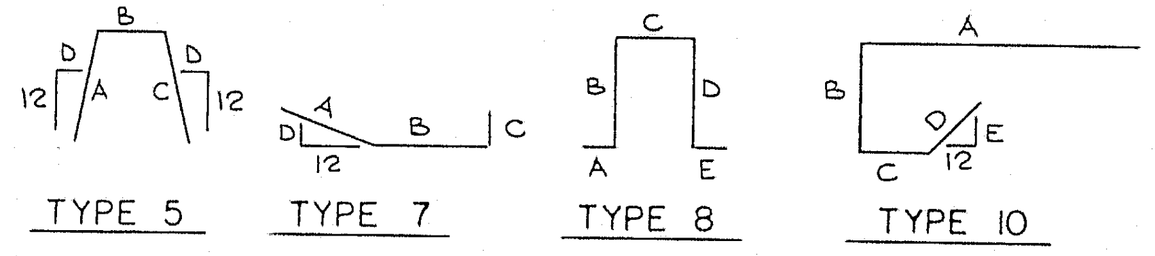

B
D
D
12
A
C
12
A
D
12
B
C
C
B
D
A
E
A
B
D
E
C
12
TYPE 5
TYPE 7
TYPE 8
TYPE 10

BENT BAR TYPES

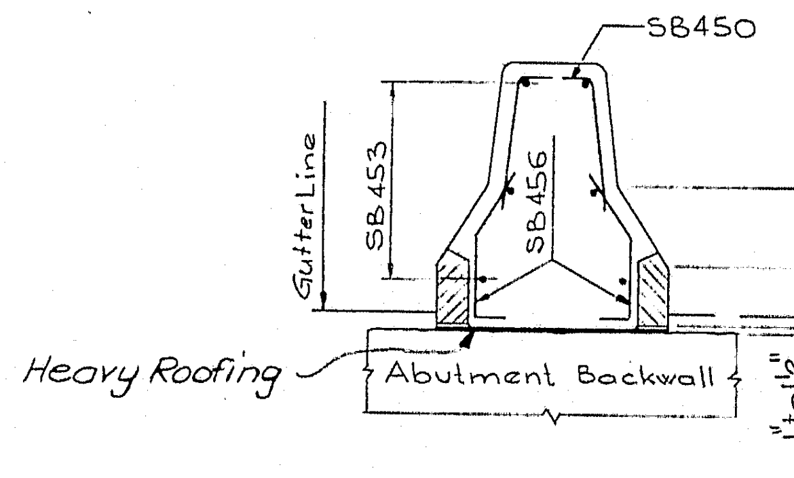

SB450
Gutter Line
SB453
SB456
10"
6"
1" to 1 1/2"
2 1/4"
Heavy Roofing
Abutment Backwall

SECTION F-F

Scale 1/2" = 1'-0"

HARDESTY & HANOVER
CONSULTING ENGINEERS
NEW YORK, N. Y.

4

DESIGN — S.D.
TRACE — Ernest Steen & L.V.
CHECK — S. Nishimura

BRIDGE NO.
IN CHARGE OF — R.W. Christie

NEW HAMPSHIRE
DEPARTMENT OF PUBLIC WORKS AND HIGHWAYS
AND
MAINE STATE HIGHWAY COMMISSION
INTERSTATE 95 BRIDGE
OVER
PISCATAQUA RIVER
BETWEEN
PORTSMOUTH, NEW HAMPSHIRE AND KITTERY, MAINE
MAINE APPROACH

APPROACH SLAB

SHEET 37 OF 44

129-88

B. P. R. REG. NO.	STATE	PROJECT NUMBER	SHEET NO.	TOTAL SHEETS
1	MAINE	I-95-1 (22) 16	38	44

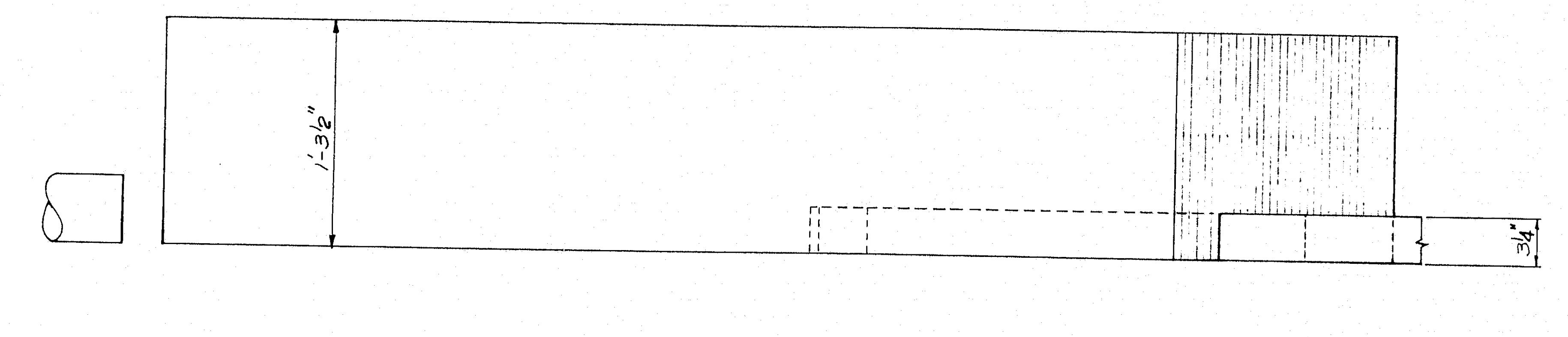

PLAN

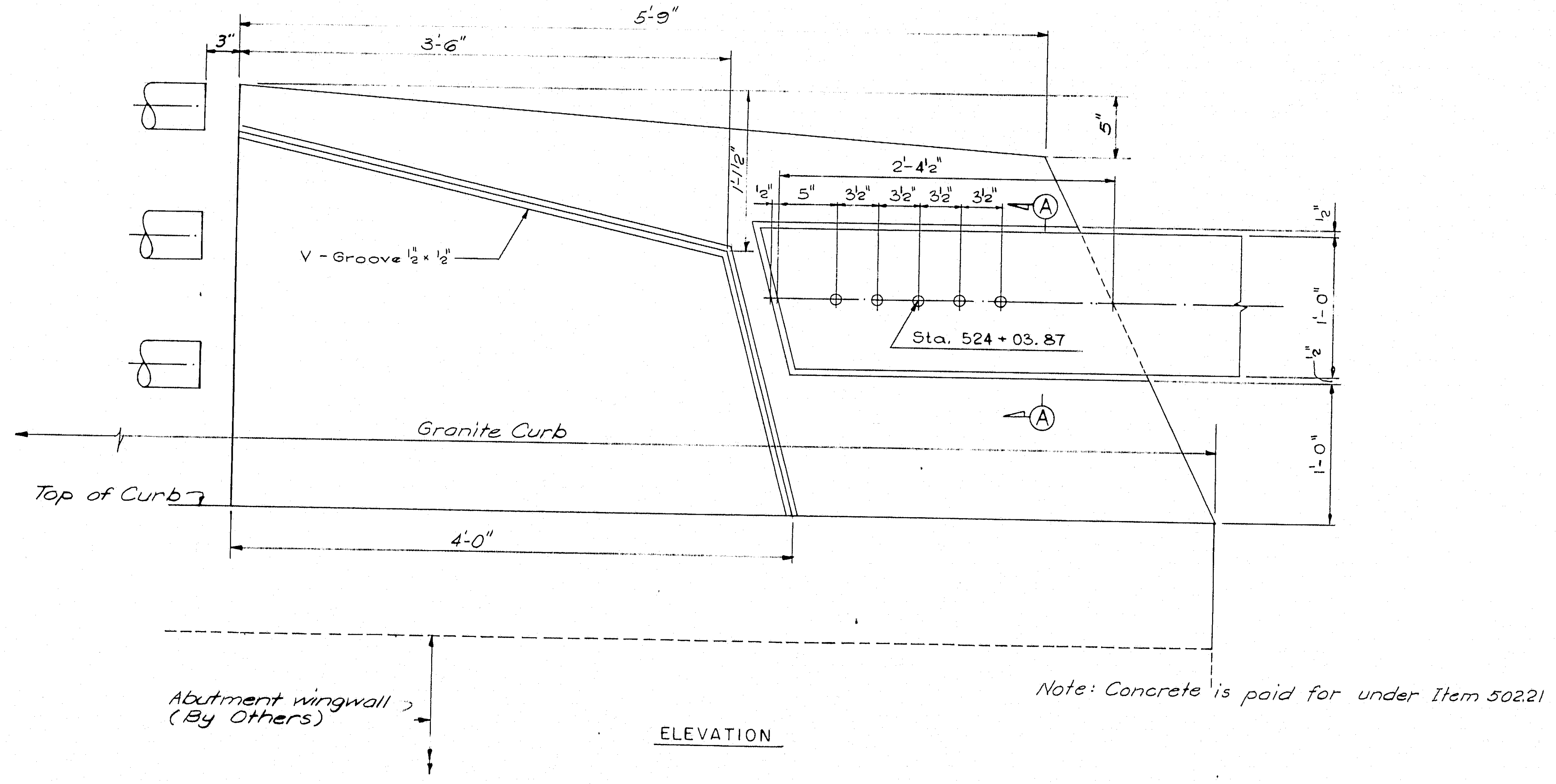

5'-9"
3"
3'-6"
5"
2'-4½"
1'-1½"
½"
5"
3½"
3½"
3½"
3½"
A
½"
1'-0"
½"
V - Groove ½" × ½"
Sta. 524 + 03.87
A
Granite Curb
1'-0"
Top of Curb
4'-0"
Abutment wingwall (By Others)

Note: Concrete is paid for under Item 502.21

ELEVATION

NEW HAMPSHIRE PYLON

Scale: 1½" = 1'-0"

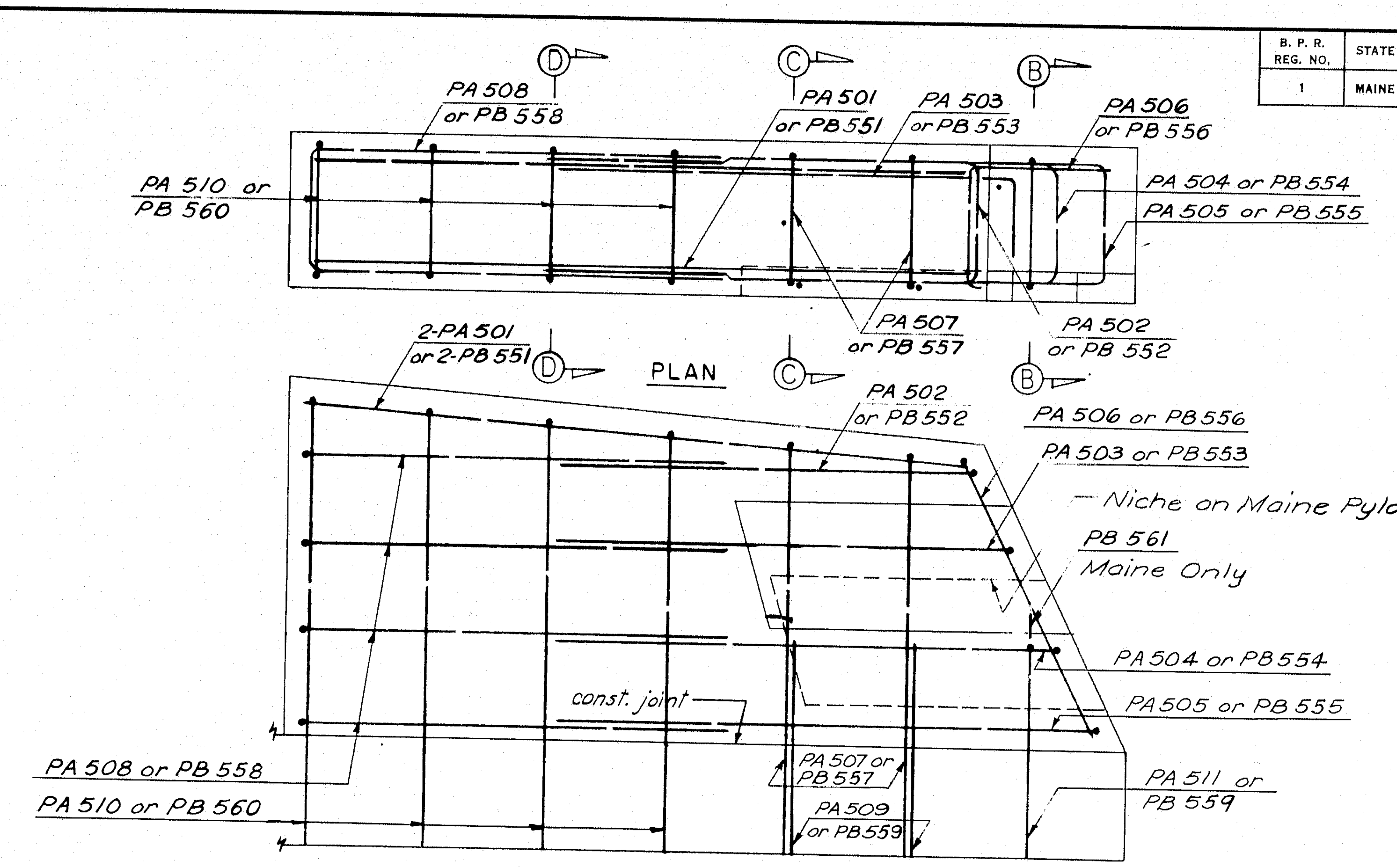

D
PA 508 or PB 558
C
PA 501 or PB 551
PA 503 or PB 553
B
PA 506 or PB 556
PA 510 or PB 560
PA 504 or PB 554
PA 505 or PB 555
PA 507 or PB 557
PA 502 or PB 552
2-PA 501 or 2-PB 551
D
PLAN
C
B
PA 502 or PB 552
PA 506 or PB 556
PA 503 or PB 553
Niche on Maine Pylon
PB 561 Maine Only
PA 504 or PB 554
PA 505 or PB 555
const. joint
PA 508 or PB 558
PA 510 or PB 560
PA 507 or PB 557
PA 509 or PB 559
PA 511 or PB 559

ELEVATION

Scale: 1" = 1'-0"

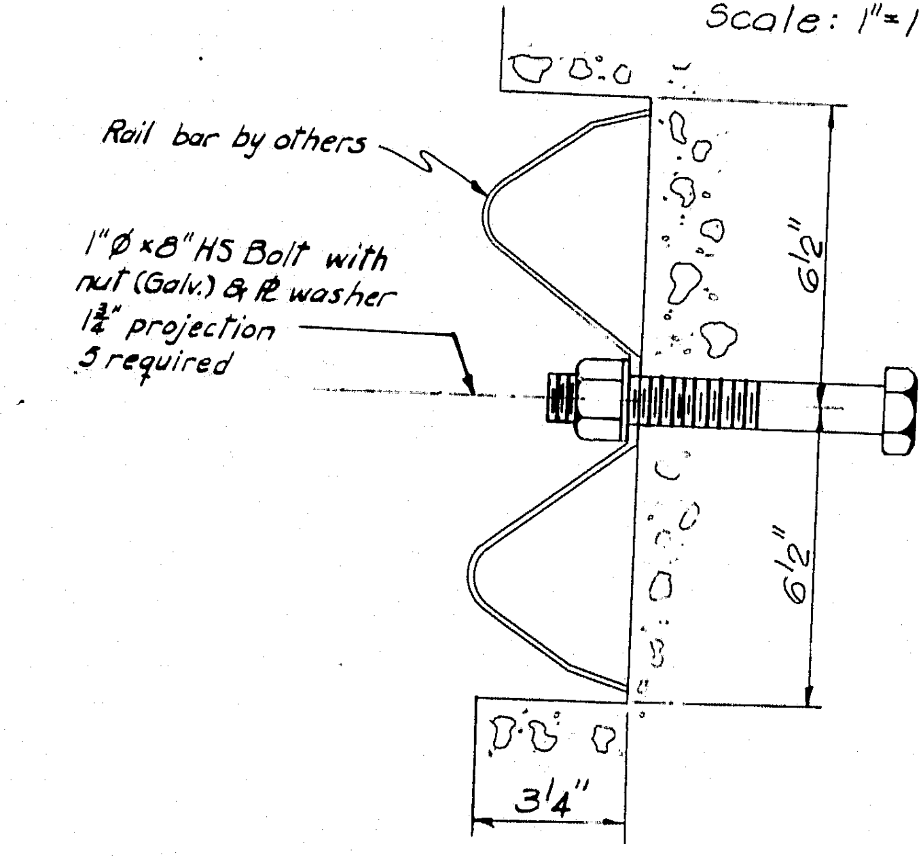

Rail bar by others
1" Ø × 8" HS Bolt with nut (Galv.) & ℞ washer 1½" projection 3 required
6½"
6½"
3¼"

SECTION A-A

Scale: 3" = 1'-0"

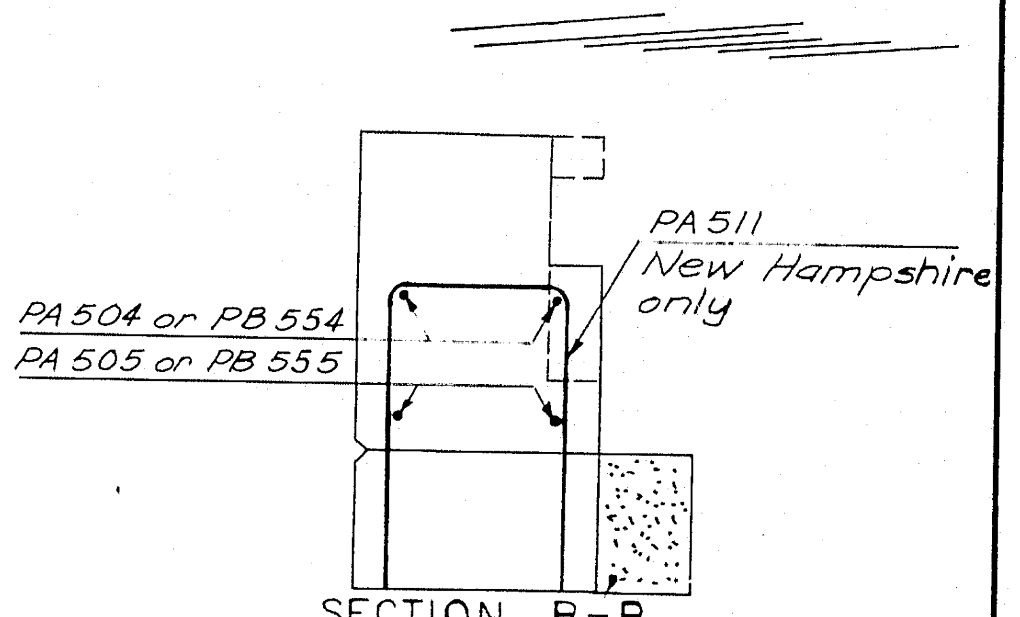

PA 511 New Hampshire only
PA 504 or PB 554
PA 505 or PB 555

SECTION B-B

Scale: 1" = 1'-0"

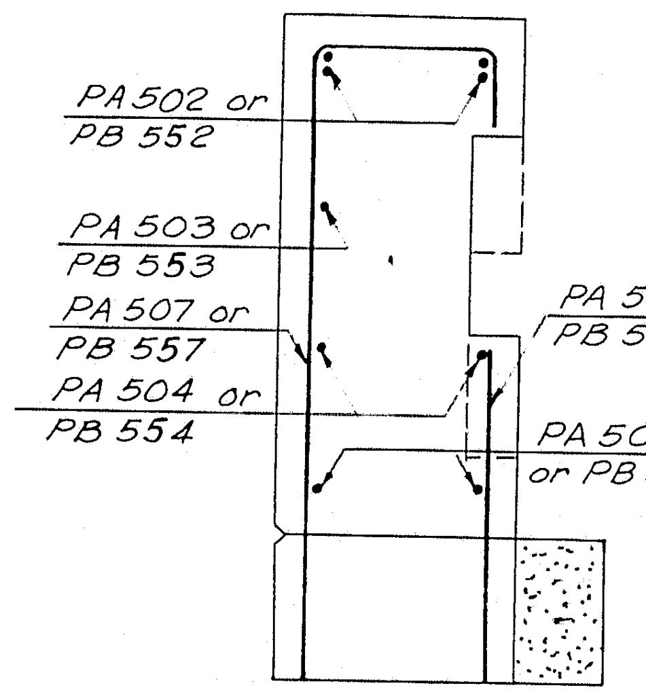

PA 502 or PB 552
PA 503 or PB 553
PA 507 or PB 557
PA 504 or PB 554
PA 509 or PB 559
PA 505 or PB 555

SECTION C-C

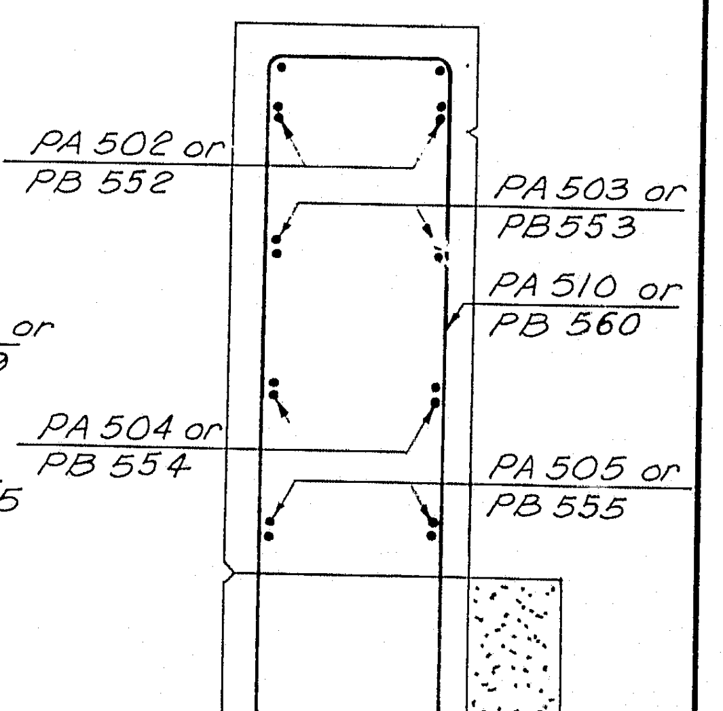

PA 502 or PB 552
PA 503 or PB 553
PA 510 or PB 560
PA 504 or PB 554
PA 505 or PB 555

SECTION D-D

Note:
1. New Hampshire bars have prefix PA. Maine bars have prefix PB.
2. Chamfer exposed edges ¾".

4

DESIGN – G. M. Garcia
TRACE – A.K.
CHECK – O. [illegible]

BRIDGE NO.
IN CHARGE OF – R. W. Christie

NEW HAMPSHIRE
DEPARTMENT OF PUBLIC WORKS AND HIGHWAYS
AND
MAINE STATE HIGHWAY COMMISSION
INTERSTATE 95 BRIDGE
OVER
PISCATAQUA RIVER
BETWEEN
PORTSMOUTH, NEW HAMPSHIRE AND KITTERY, MAINE

HARDESTY & HANOVER
CONSULTING ENGINEERS
NEW YORK, N. Y.

PYLON DETAILS

SHEET 38 OF 44

129-89

B. P. R. REG. NO.	STATE	PROJECT NUMBER	SHEET NO.	TOTAL SHEETS
1	MAINE	I-95-1 (22) 16	39	44

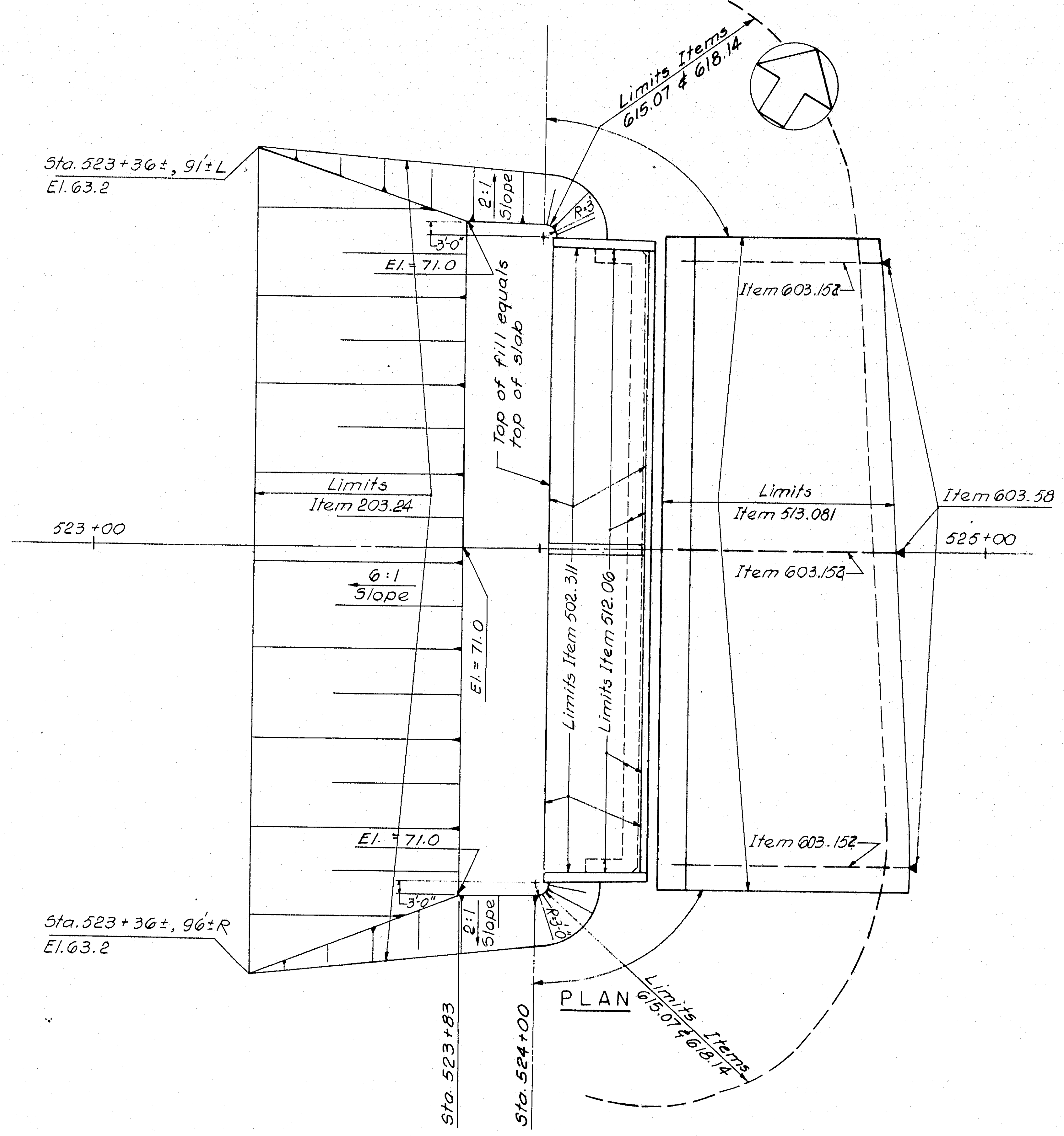

Sta. 523+36±, 91'±L
El. 63.2
Limits Items 615.07 & 618.14
2:1 Slope
R.=3'
3'-0"
El. = 71.0
Top of fill equals top of slab
Item 603.152
Limits Item 203.24
Limits Item 513.081
Item 603.58
523+00
525+00
6:1 Slope
El. = 71.0
Limits Item 502.311
Limits Item 512.06
Item 603.152
Item 603.152
El. = 71.0
3'-0"
Sta. 523+36±, 96'±R
El. 63.2
2:1 Slope
R.=3'
Limits Items 615.07 & 618.14
Sta. 523+83
Sta. 524+00

PLAN

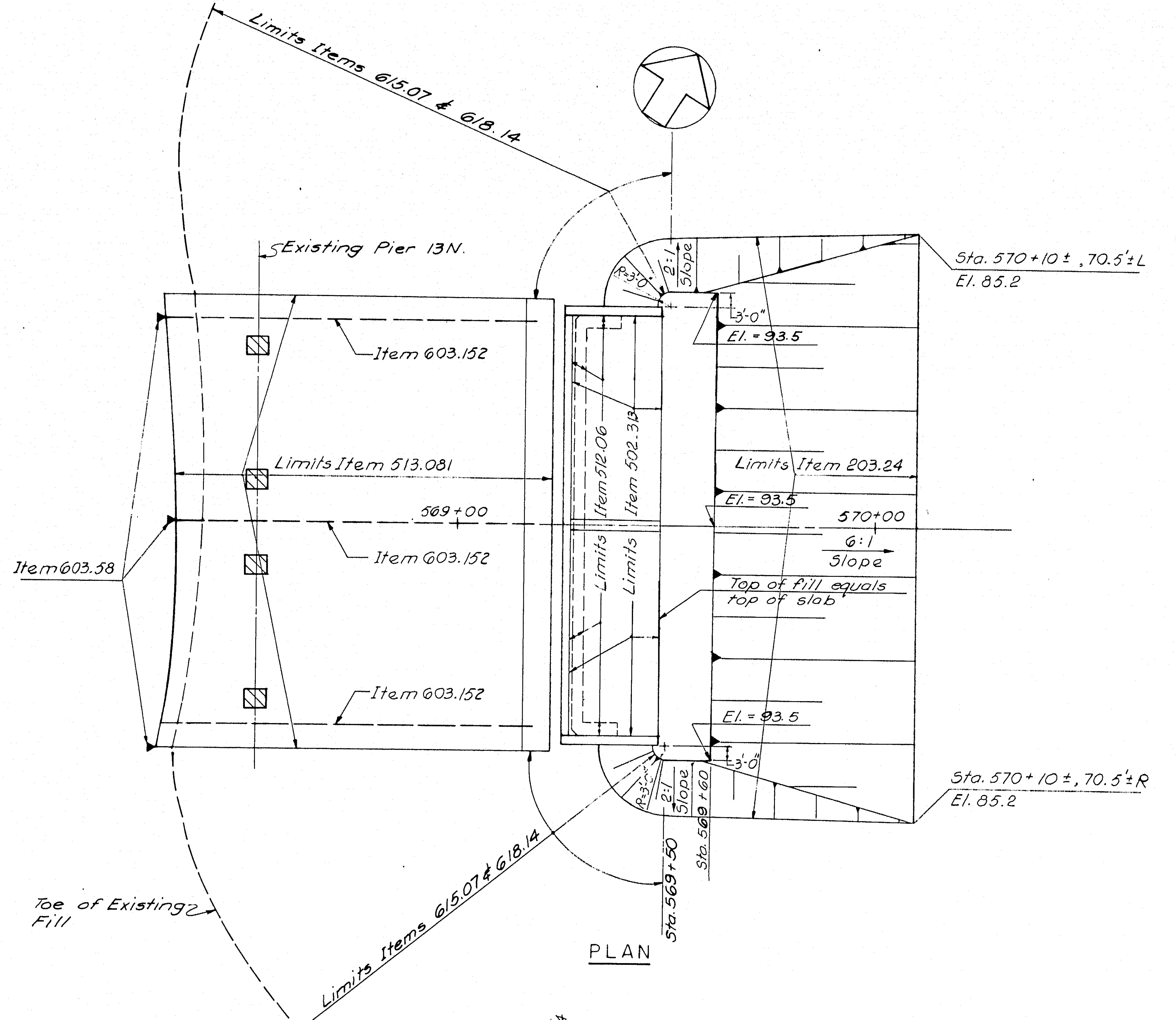

Limits Items 615.07 & 618.14
Existing Pier 13N.
Sta. 570+10±, 70.5'±L
El. 85.2
R.=3'
2:1 Slope
3'-0"
El. = 93.5
Item 603.152
Limits Item 513.081
Limits Item 512.06
Limits Item 502.313
Limits Item 203.24
El. = 93.5
569+00
570+00
Item 603.58
Item 603.152
6:1 Slope
Top of fill equals top of slab
Item 603.152
El. = 93.5
3'-0"
Sta. 570+10±, 70.5'±R
El. 85.2
R.=3'
2:1 Slope
Sta. 569+50
Sta. 569+60
Toe of Existing Fill
Limits Items 615.07 & 618.14

PLAN

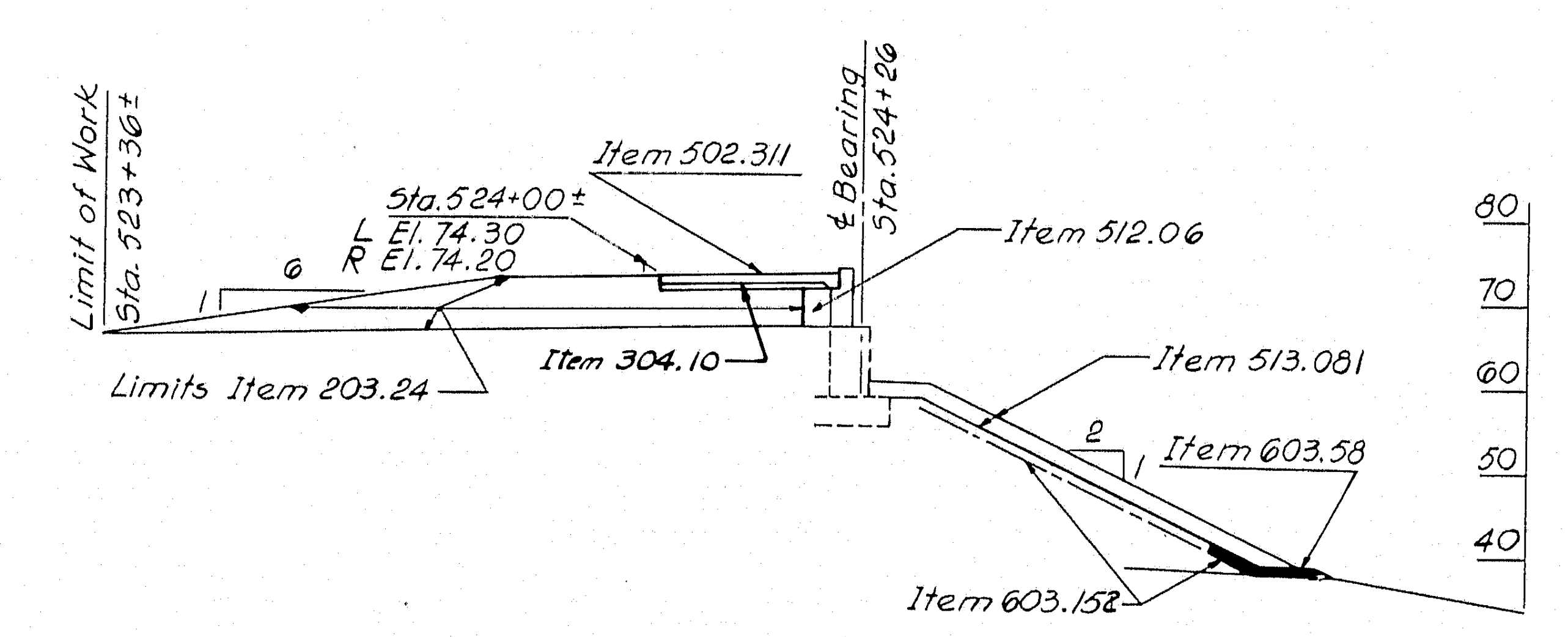

Limit of Work Sta. 523+36±
Sta. 524+00±
L El. 74.30
R El. 74.20
Item 502.311
℄ Bearing Sta. 524+26
Item 512.06
1
6
Limits Item 203.24
Item 304.10
Item 513.081
2
1
Item 603.58
Item 603.152
80
70
60
50
40

SOUTH ABUTMENT

Scale Horiz. & Vert.: 1"=20'

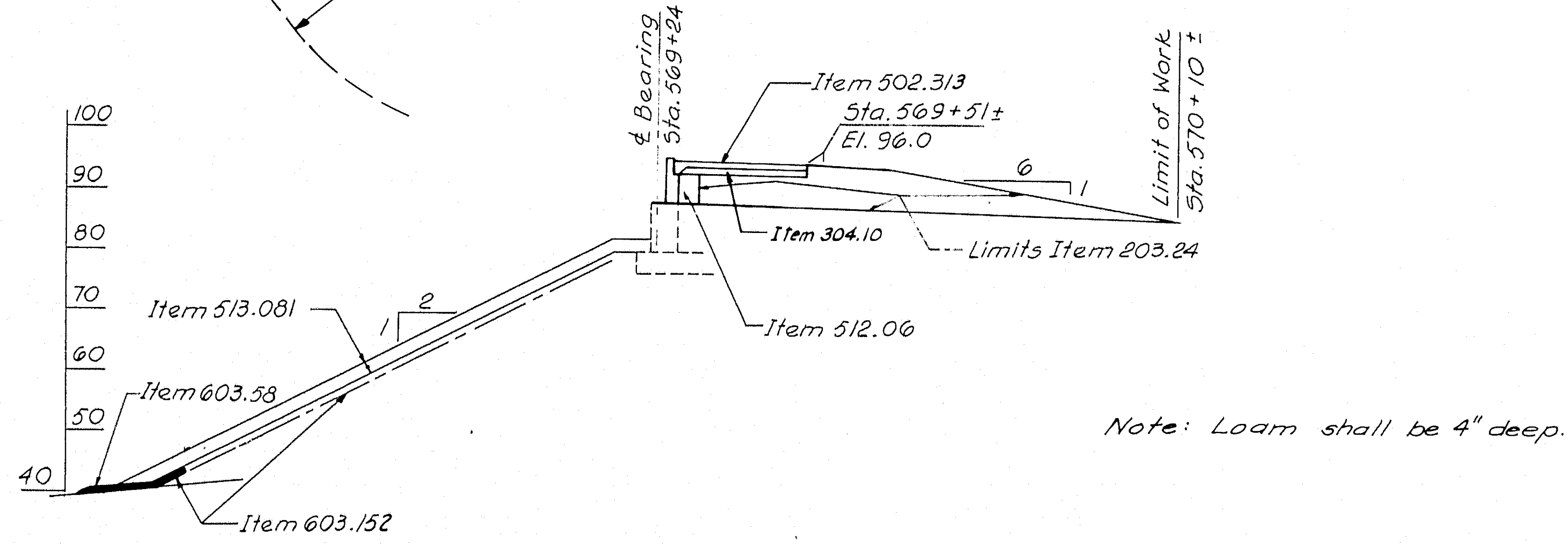

100
90
80
70
60
50
40
℄ Bearing Sta. 569+24
Item 502.313
Sta. 569+51±
El. 96.0
6
1
Limit of Work Sta. 570+10±
Item 304.10
Limits Item 203.24
Item 513.081
1
2
Item 512.06
Item 603.58
Item 603.152

NORTH ABUTMENT

Scale Horiz. & Vert.: 1"=20'

Note: Loam shall be 4" deep.

4

DESIGN — G. M. Garcia
TRACE — A.D.T.
CHECK — S. Nishimura

BRIDGE NO. IN CHARGE OF — R.W. Christie

NEW HAMPSHIRE
DEPARTMENT OF PUBLIC WORKS AND HIGHWAYS
AND
MAINE STATE HIGHWAY COMMISSION
INTERSTATE 95 BRIDGE
OVER
PISCATAQUA RIVER
BETWEEN
PORTSMOUTH, NEW HAMPSHIRE AND KITTERY, MAINE

HARDESTY & HANOVER
CONSULTING ENGINEERS
NEW YORK, N. Y.

ABUTMENT LAYOUT DETAILS

SHEET 39 OF 44

129-90

B. P. R. REG. NO.	STATE	PROJECT NUMBER	SHEET NO.	TOTAL SHEETS
1	MAINE	I-95-1 (22) 1.6	40	44

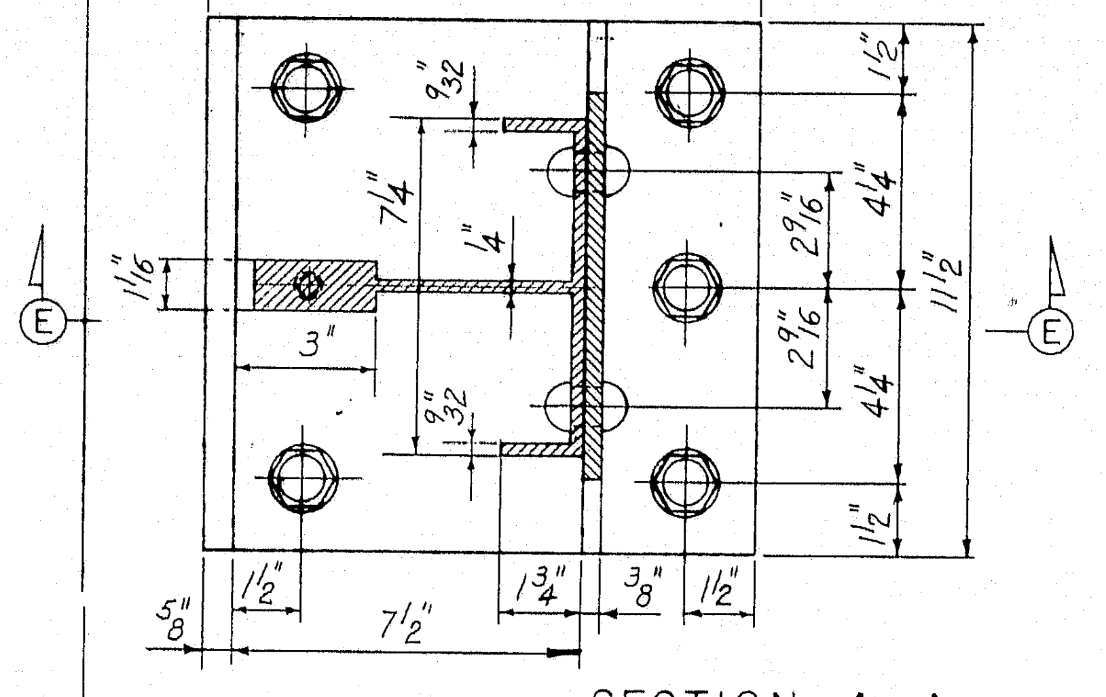
11 7/8"
9/32"
7 1/4"
1/4"
1 1/16"
3"
2 9/16"
4 1/4"
1 1/2"
11 1/2"
5/8"
1 1/2"
7 1/2"
1 3/4"
3/8"
E
E

SECTION A-A
Scale: 3"=1'-0"

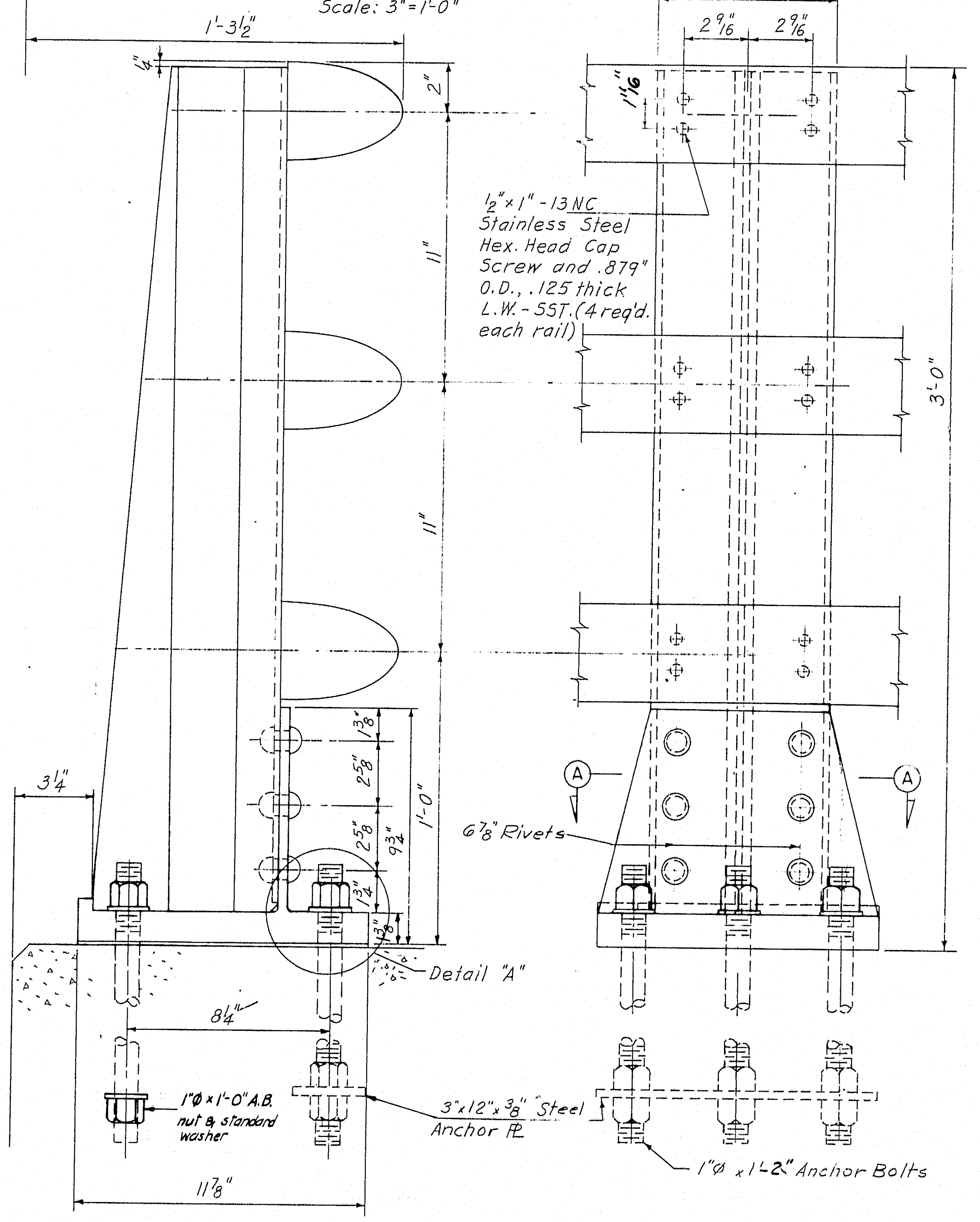
1'-3 1/2"
1/4"
2"
11"
11"
3'-0"
1'-0"
3 1/4"
7 1/4"
2 9/16"
2 9/16"
1 11/16"
1/2"×1"-13 NC. Stainless Steel Hex. Head Cap Screw and .879" O.D., .125 thick L.W.-SST. (4 req'd. each rail)
6 7/8" Rivets
A
A
Detail "A"
8 1/4"
11 7/8"
1"Ø×1'-0" A.B. nut & standard washer
3"×12"×3/8" Steel Anchor Pl.
1"Ø×1'-2" Anchor Bolts

ALUMINUM BRIDGE RAILING - 3 RAIL
Scale: 3"=1'-0"

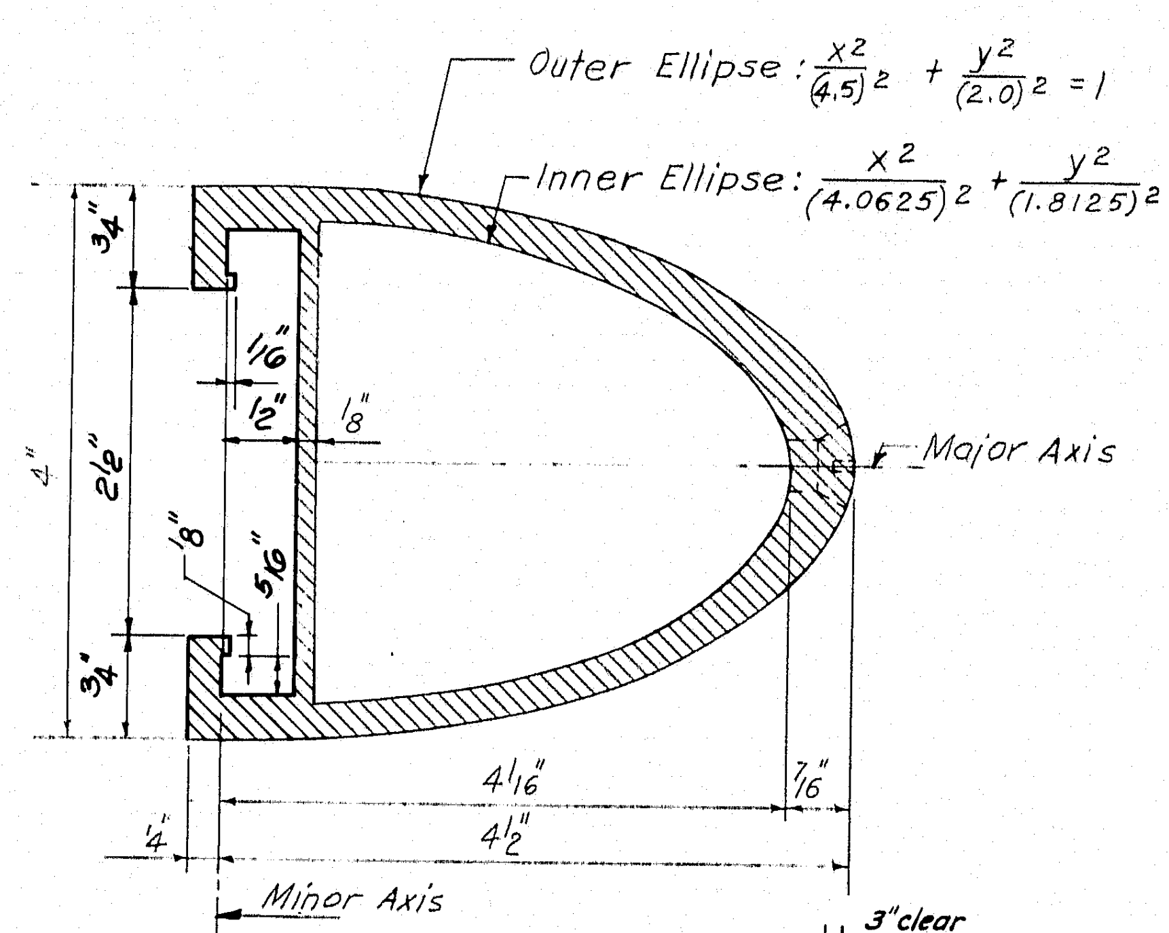
Outer Ellipse: $\frac{x^2}{(4.5)^2}+\frac{y^2}{(2.0)^2}=1$
Inner Ellipse: $\frac{x^2}{(4.0625)^2}+\frac{y^2}{(1.8125)^2}=1$
Major Axis
Minor Axis
4"
2 1/2"
3/4"
3/4"
1/16"
1/2"
1/8"
5/16"
4 1/16"
4 1/2"
7/16"
1/4"

RAIL
Scale: 3/4"=1"

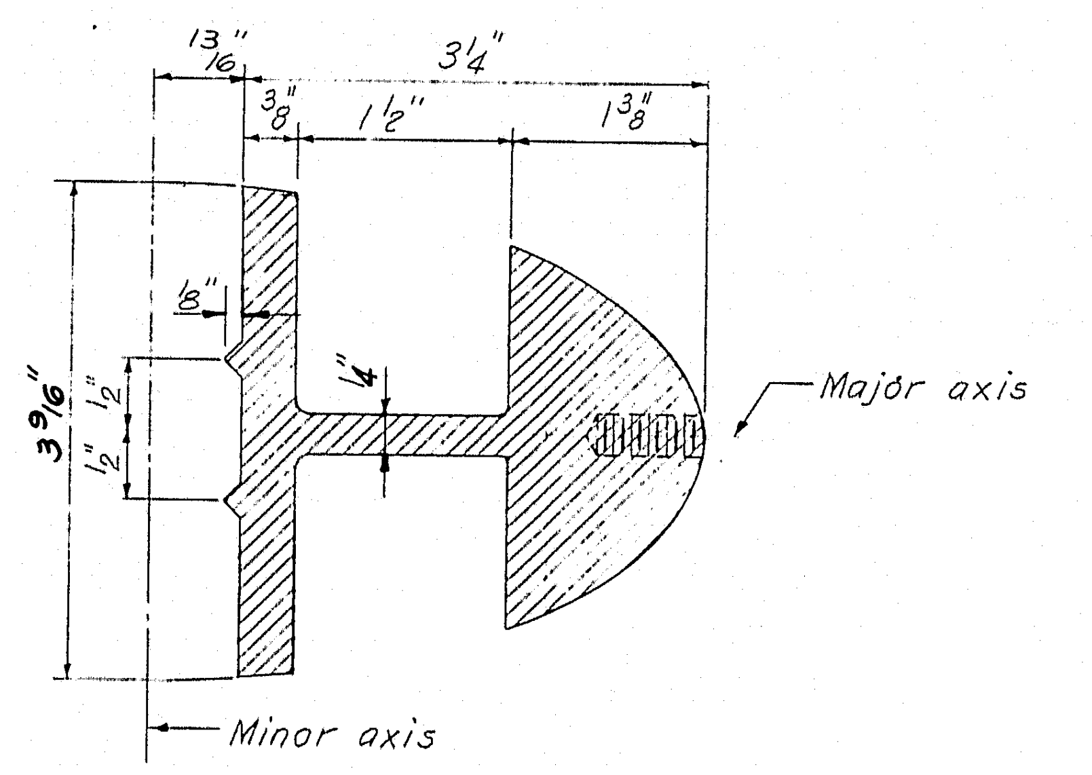
13/16"
3/8"
1 1/2"
3 1/4"
1 3/8"
1/8"
3 9/16"
1/2"
1/4"
Major axis
Minor axis

RAIL SPLICE
Scale: 3/4"=1"

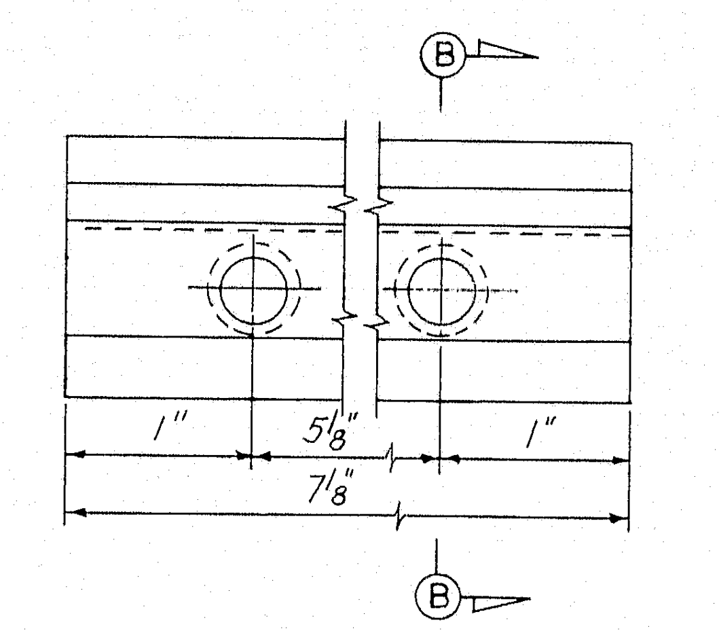

RAIL CLAMP BAR DETAIL
Scale: Full Size

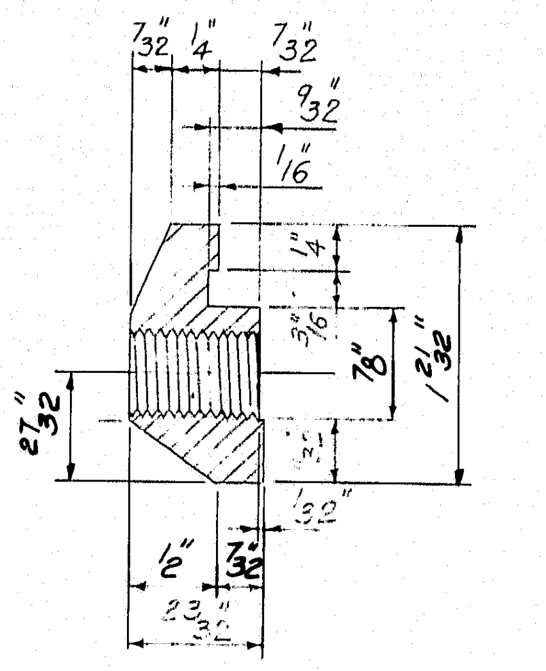
7/32"
1/4"
7/32"
9/32"
1/16"
27/32"
7/8"
1 21/32"
1/2"
7/32"
23/32"

SECTION B-B
Scale: Full Size

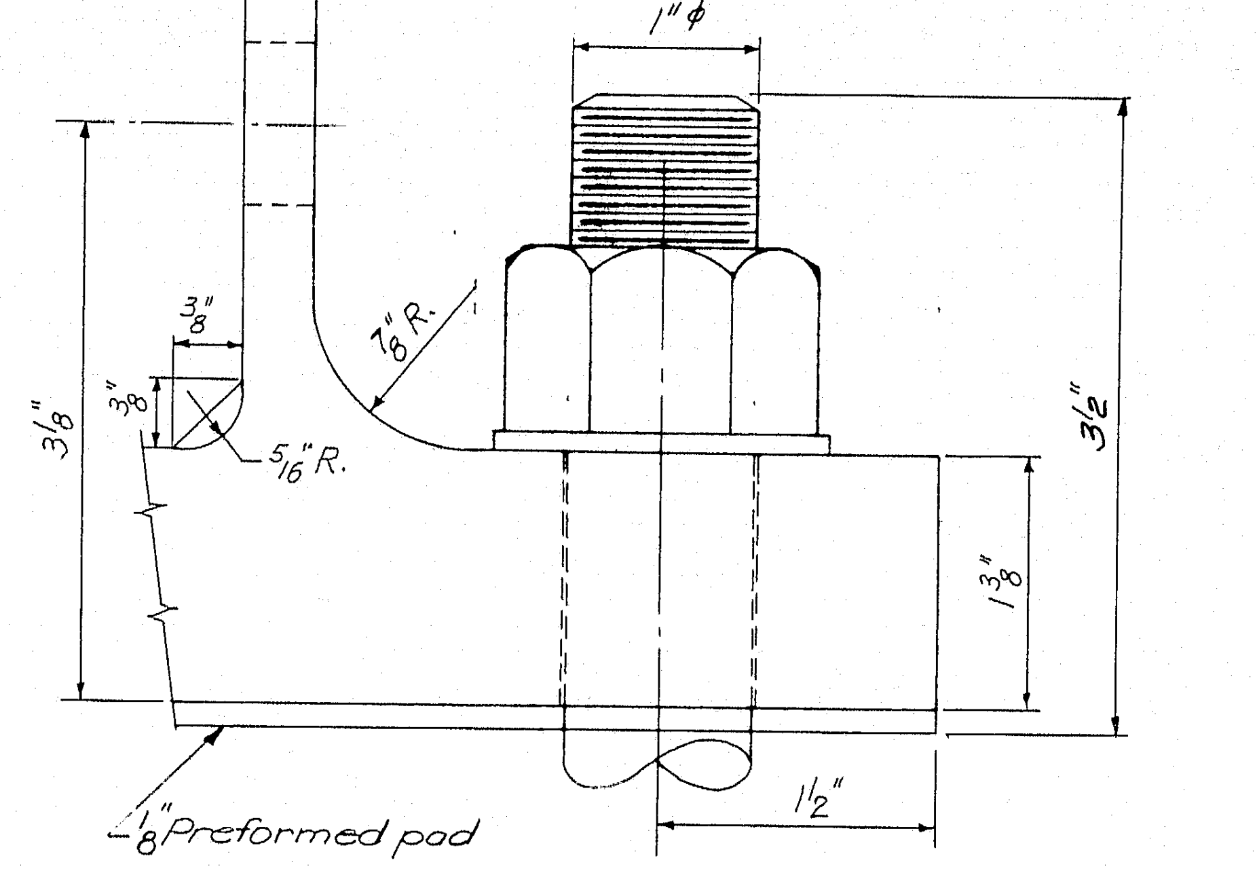
3/8"
1"Ø
7/8" R.
5/16" R.
3 1/8"
3 1/2"
1 3/8"
1 1/2"
1/8" Preformed pad

DETAIL "A"
Scale: Full Size

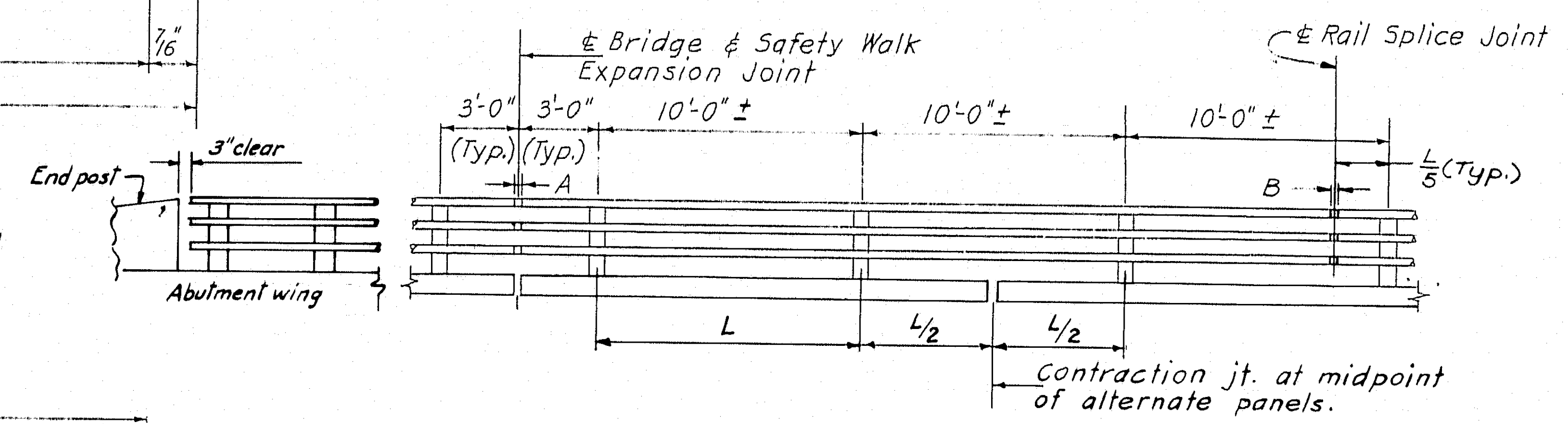
℄ Bridge & Safety Walk Expansion Joint
℄ Rail Splice Joint
3'-0" (Typ.)
3'-0" (Typ.)
10'-0" ±
10'-0" ±
10'-0" ±
A
B
L/8 (Typ.)
End post
3" clear
Abutment wing
L
L/2
L/2
Contraction jt. at midpoint of alternate panels.

TYPICAL RAILING ELEVATION
Scale: 3/16"=1'-0"

SPACING AT 45 °F	A	B
Approach Spans	4"	2"

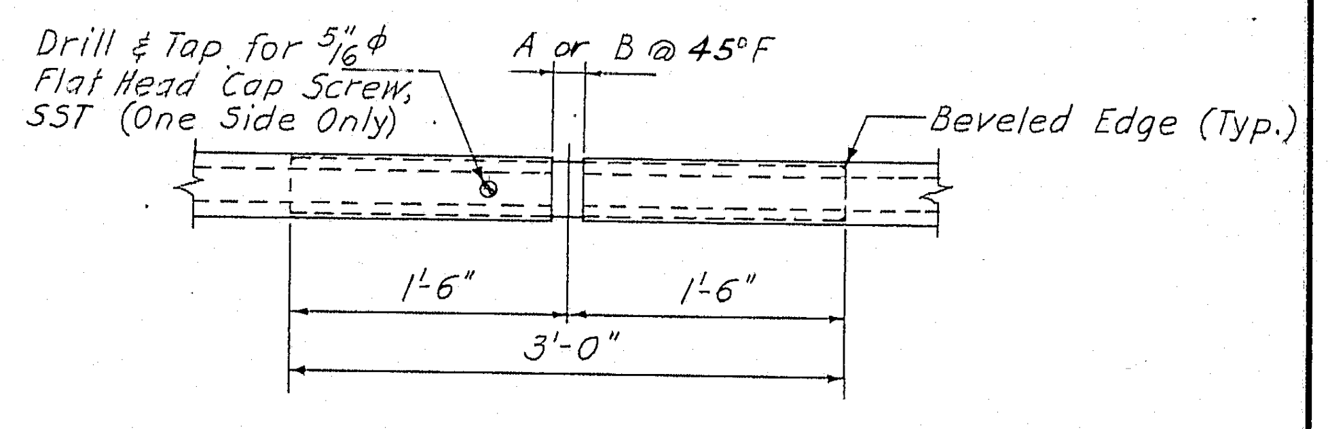
Drill & Tap for 5/16"Ø Flat Head Cap Screw, SST (One Side Only)
A or B @ 45°F
Beveled Edge (Typ.)
1'-6"
1'-6"
3'-0"

JOINT DETAIL
Scale: 1"=1'-0"

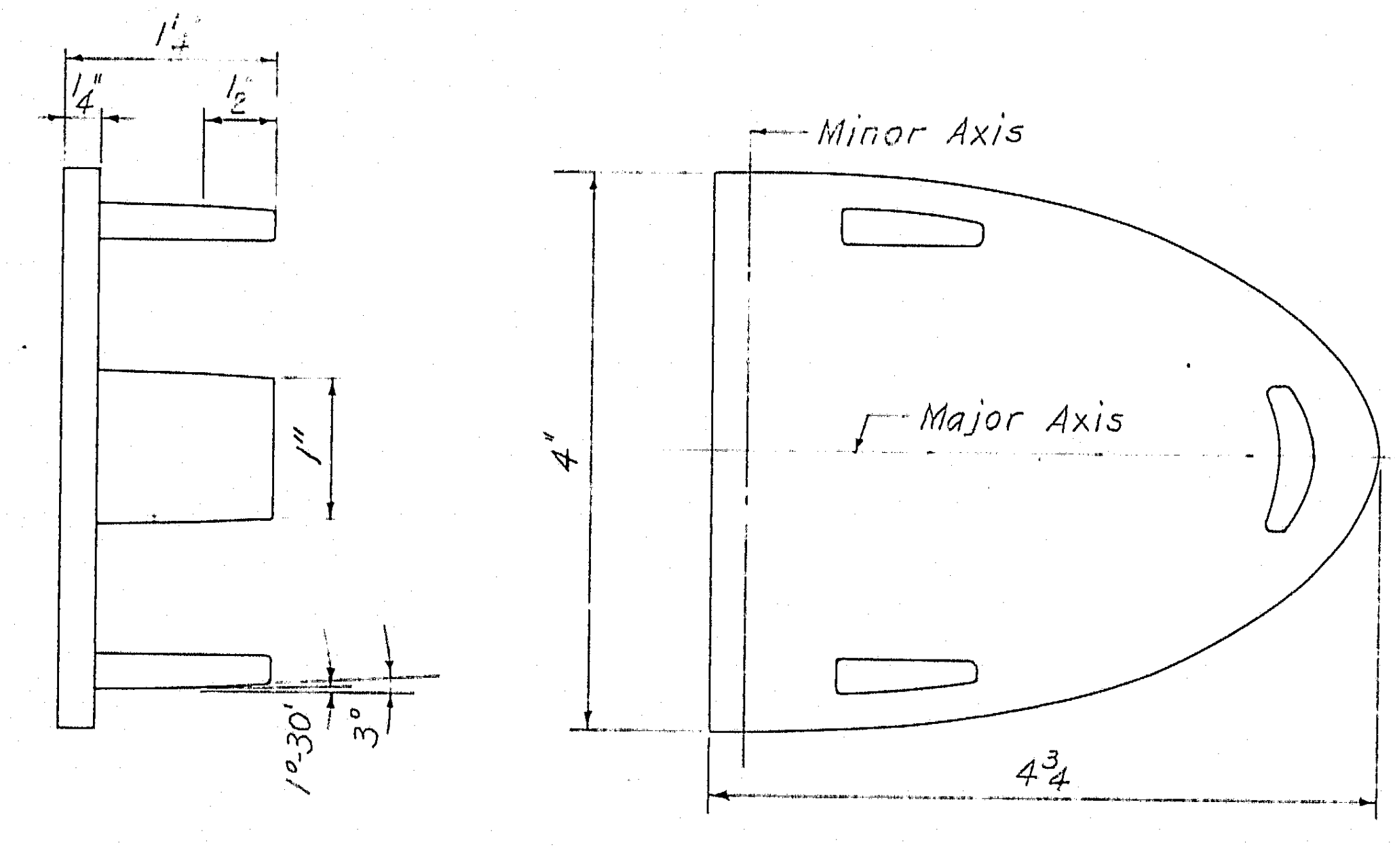
1 1/4"
1/4"
1/2"
Minor Axis
Major Axis
4"
1"
1°30'
3"
4 3/4"

RAIL CAP
Scale: 3/4"=1"

NOTES:

1. Rails must be continuous over a minimum of four posts except on wings.
2. Anchor bolts, nuts, washers, and cap screws shall be ASTM 276 Stainless Steel, Type 316, cold worked to 50,000 Psi. min. yield stress.
3. Posts, bases, rails, splices and rail clamps shall be ASTM B221-66 Aluminum Alloy 6061-T6.
4. Rail caps shall be ASTM B209 Aluminum Alloy 6061-T6.
5. Rivets shall be ASTM B316-66 Aluminum Alloy 6061-T6, high button head, cold driven.
6. Posts shall be set normal to the slope of the brush curbs.
7. Tolerances on transverse alignment of posts shall be ±1/8" from the theoretical line.

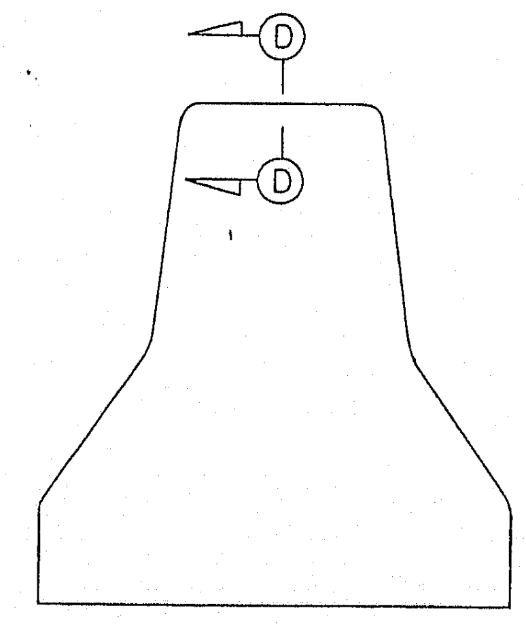

MEDIAN CONTRACTION JOINT DETAIL
Scale: 1"=1'-0"

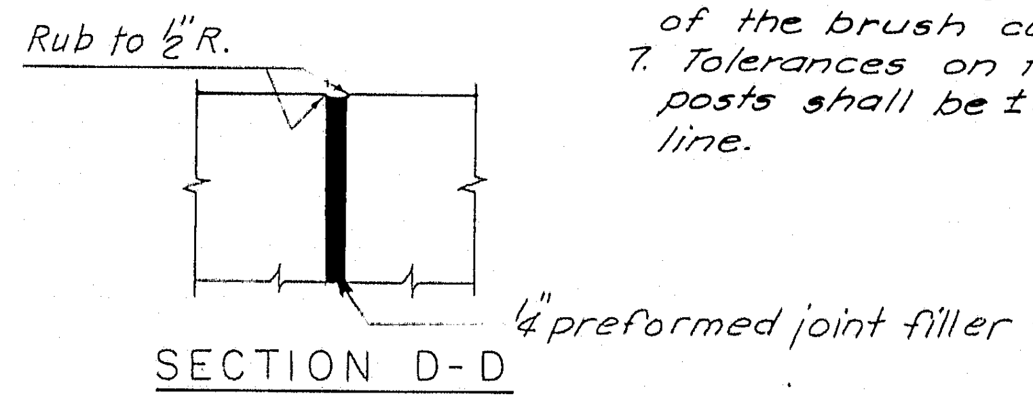
Rub to 1/2"R.
1/4" preformed joint filler

SECTION D-D
Scale: 3"=1'-0"

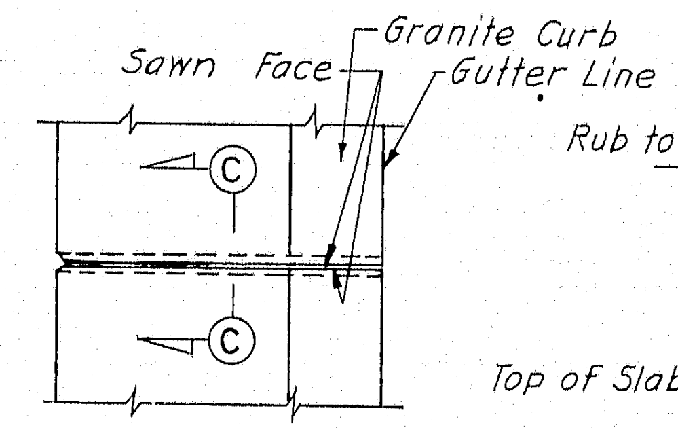
Sawn Face
Granite Curb
Gutter Line
C
C

SAFETY WALK CONTRACTION JOINT DETAIL
Scale: 1"=1'-0"

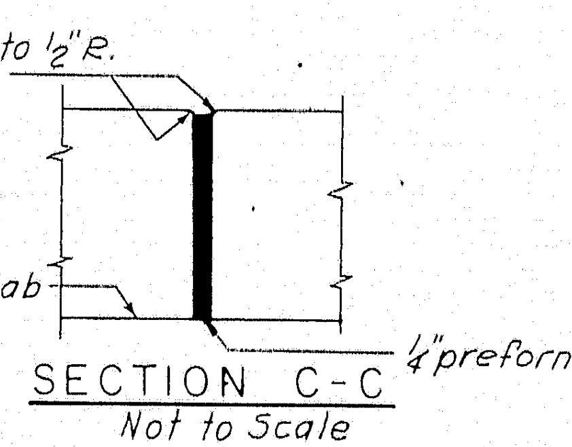
Rub to 1/2"R.
Top of Slab
1/4" preformed joint filler

SECTION C-C
Not to Scale

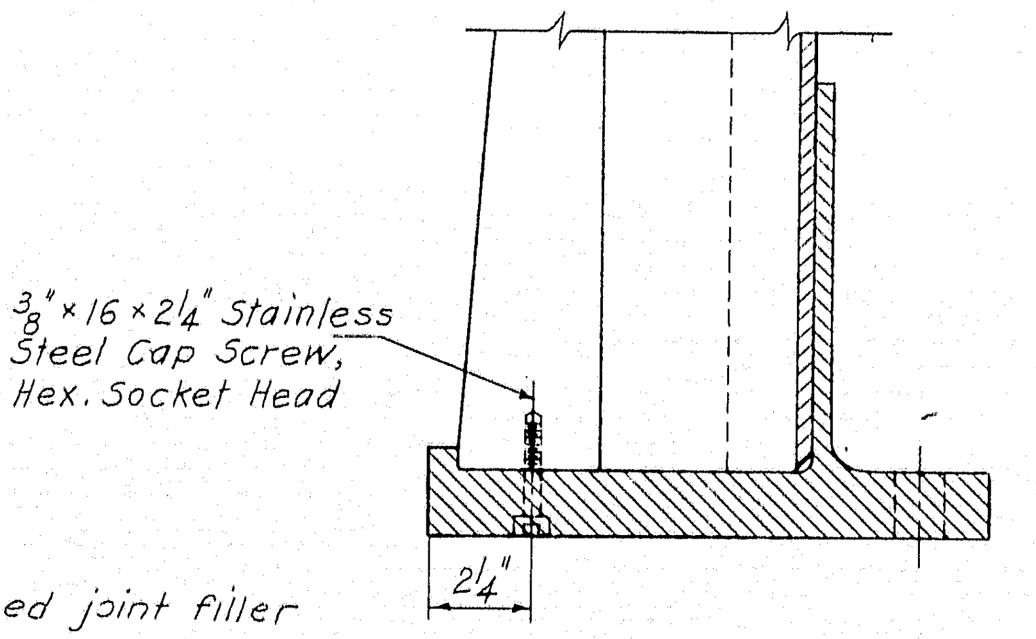
3/8"×16×2 1/4" Stainless Steel Cap Screw, Hex. Socket Head
2 1/4"

SECTION E-E
Scale: 3"=1'-0"

HARDESTY & HANOVER
CONSULTING ENGINEERS
NEW YORK, N.Y.

4

DESIGN — S. D.
TRACE — C. A. Zil
CHECK — S. Vrikman
BRIDGE NO.
IN CHARGE OF — R. W. Christie

NEW HAMPSHIRE
DEPARTMENT OF PUBLIC WORKS AND HIGHWAYS
AND
MAINE STATE HIGHWAY COMMISSION
INTERSTATE 95 BRIDGE
OVER
PISCATAQUA RIVER
BETWEEN
PORTSMOUTH, NEW HAMPSHIRE AND KITTERY, MAINE

RAILING DETAILS

SHEET 40 OF 44

129-91

12

B. P. R. REG. NO.	STATE	PROJECT NUMBER	SHEET NO.	TOTAL SHEETS
1	MAINE	I-95-1(22)16	41	44

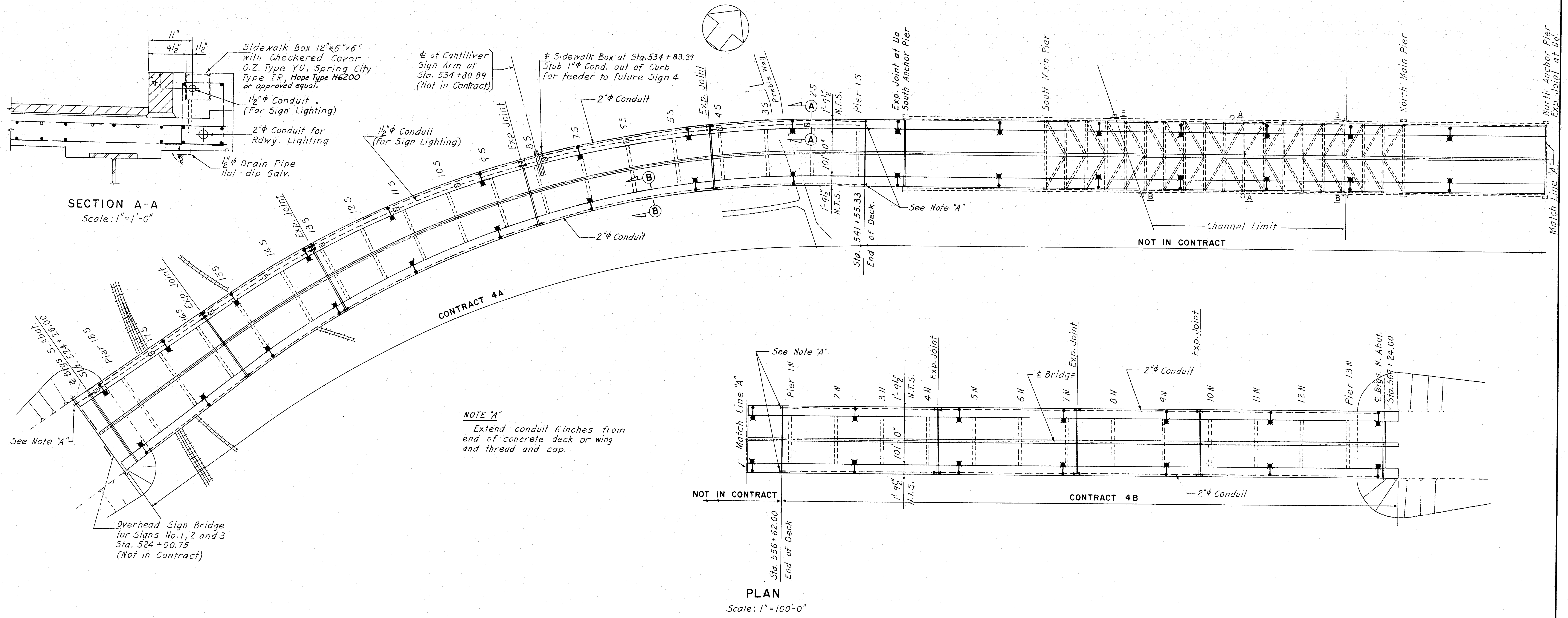
11"
9½"
1½"
Sidewalk Box 12"×6"×6" with Checkered Cover O.Z. Type YU, Spring City Type IR, Hope Type H6200 or approved equal.
1½"φ Conduit (For Sign Lighting)
2"φ Conduit for Rdwy. Lighting
½"φ Drain Pipe Hot-dip Galv.
1" min.
℄ of Cantiliver Sign Arm at Sta. 534+80.89 (Not in Contract)
℄ Sidewalk Box at Sta. 534+83.39 Stub 1"φ Cond. out of Curb for feeder to future Sign 4
2"φ Conduit
1½"φ Conduit (for Sign Lighting)
Exp. Joint
Preble way
A
B
25
35
45
55
65
75
85
95
105
115
125
135
145
155
165
175
Pier 15
Pier 185
1'-9½" N.T.S.
101'-0"
Sta. 541+55.33 End of Deck.
See Note "A"
Exp. Joint at Uo South Anchor Pier
South Main Pier
North Main Pier
North Anchor Pier Exp. Joint at Uo'
Match Line "A"
Channel Limit
NOT IN CONTRACT
CONTRACT 4A
℄ Brgs. S. Abut. Sta. 524+26.00
Overhead Sign Bridge for Signs No. 1, 2 and 3 Sta. 524+00.75 (Not in Contract)
Pier 1N
2N
3N
4N
5N
6N
7N
8N
9N
10N
11N
12N
Pier 13N
℄ Bridge
℄ Brgs. N. Abut. Sta. 569+24.00
Sta. 556+62.00 End of Deck
CONTRACT 4B

SECTION A-A
Scale: 1" = 1'-0"

PLAN
Scale: 1" = 100'-0"

NOTE "A"
Extend conduit 6 inches from end of concrete deck or wing and thread and cap.

LEGEND

- ●—✖ – Anchorage for Roadway Lighting Pole
- ▨ – Sidewalk Box, 12"×6"×6"
- – – – – – Conduit (Size as Noted)
- ⋈ – Conduit Expansion Fitting

Notes:
1. For locations of pole anchorages see Deck Slab Layouts.
2. For Section B-B see Sheet 42.

HARDESTY & HANOVER
CONSULTING ENGINEERS
NEW YORK, N. Y.

4

DESIGN – E.D.
TRACE – K.A.S.
CHECK – H.B. Hyatt

BRIDGE NO.
IN CHARGE OF – Richard W. Christie

NEW HAMPSHIRE
DEPARTMENT OF PUBLIC WORKS AND HIGHWAYS
AND
MAINE STATE HIGHWAY COMMISSION
INTERSTATE 95 BRIDGE
OVER
PISCATAQUA RIVER
BETWEEN
PORTSMOUTH, NEW HAMPSHIRE AND KITTERY, MAINE
APPROACH SPANS
CONDUIT LAYOUT

SHEET 41 OF 44

129-92

B. P. R. REG. NO.	STATE	PROJECT NUMBER	SHEET NO.	TOTAL SHEETS
1	MAINE	I-95-1(22)16	42	44

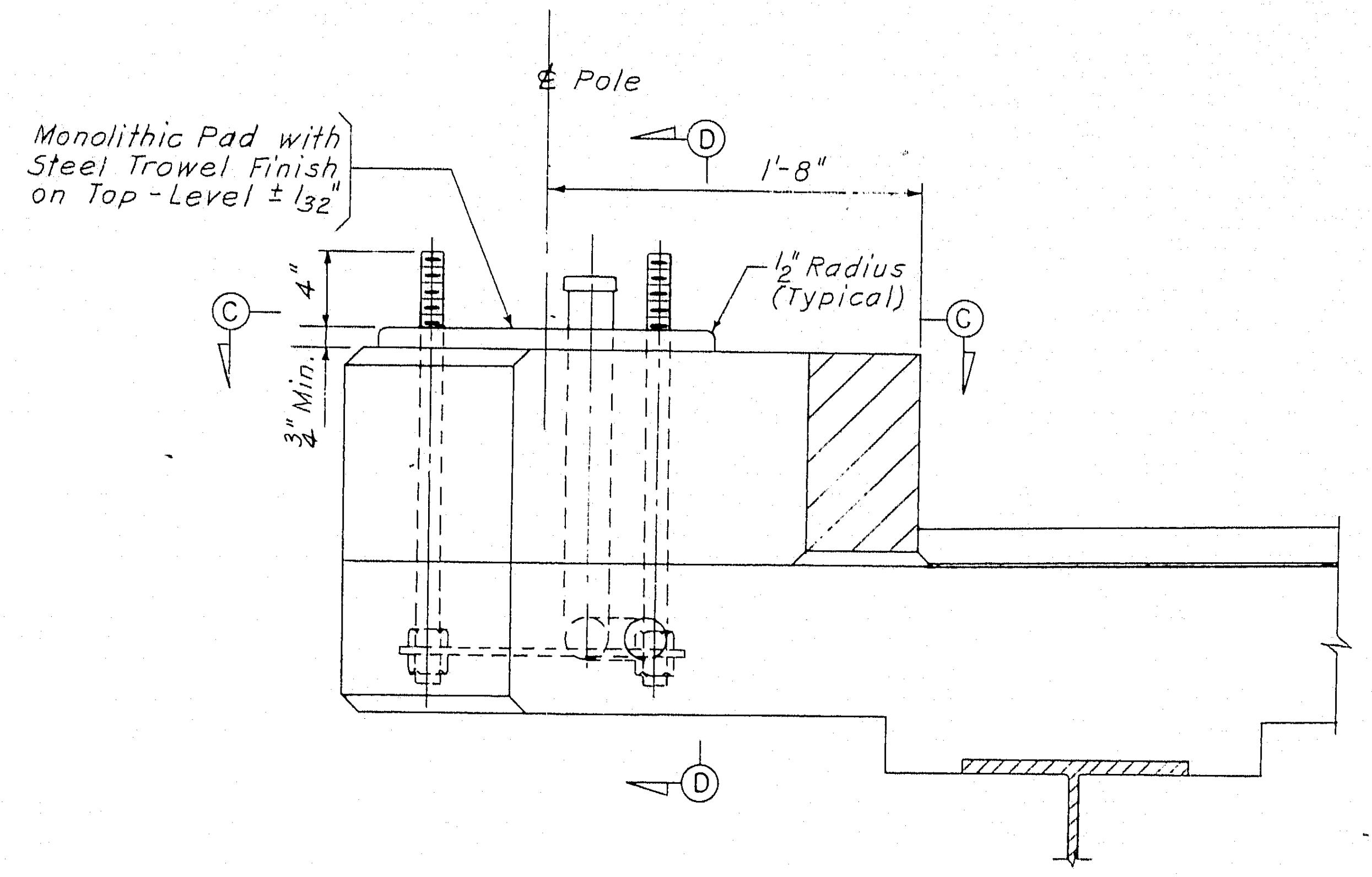

℄ Pole
D
Monolithic Pad with Steel Trowel Finish on Top - Level ± 1/32"
1'-8"
1/2" Radius (Typical)
C
C
4"
3/4" Min.
D

SECTION B-B
TYPICAL ANCHORAGE FOR
ROADWAY LIGHTING POLE
Scale: 1 1/2" = 1'-0"

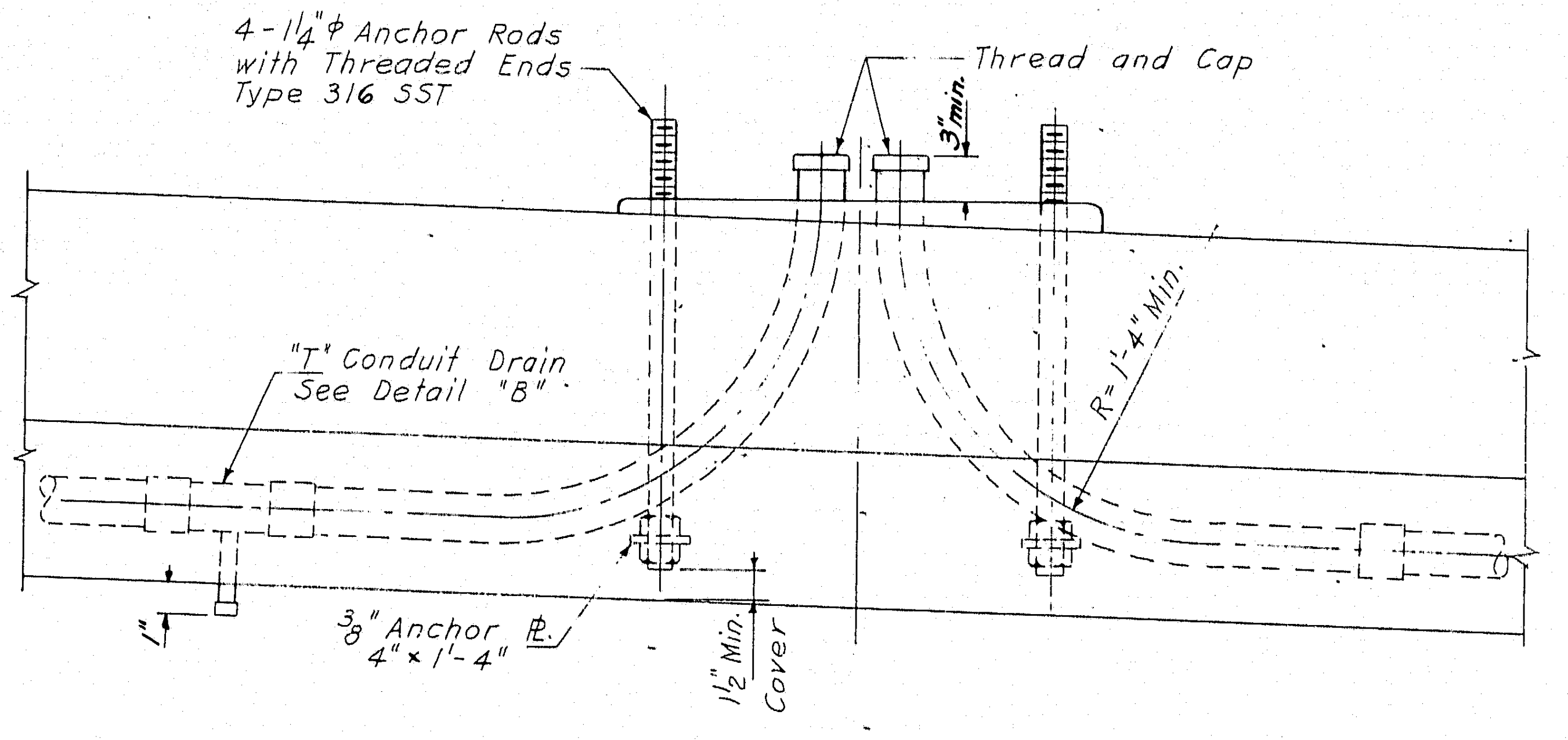

4-1 1/4"ϕ Anchor Rods with Threaded Ends Type 316 SST
Thread and Cap
3" min.
"T" Conduit Drain See Detail "B"
R=1'-4" Min.
1"
3/8" Anchor ℄ 4" × 1'-4"
1 1/2" Min. Cover

SECTION D-D
Scale: 1 1/2" = 1'-0"

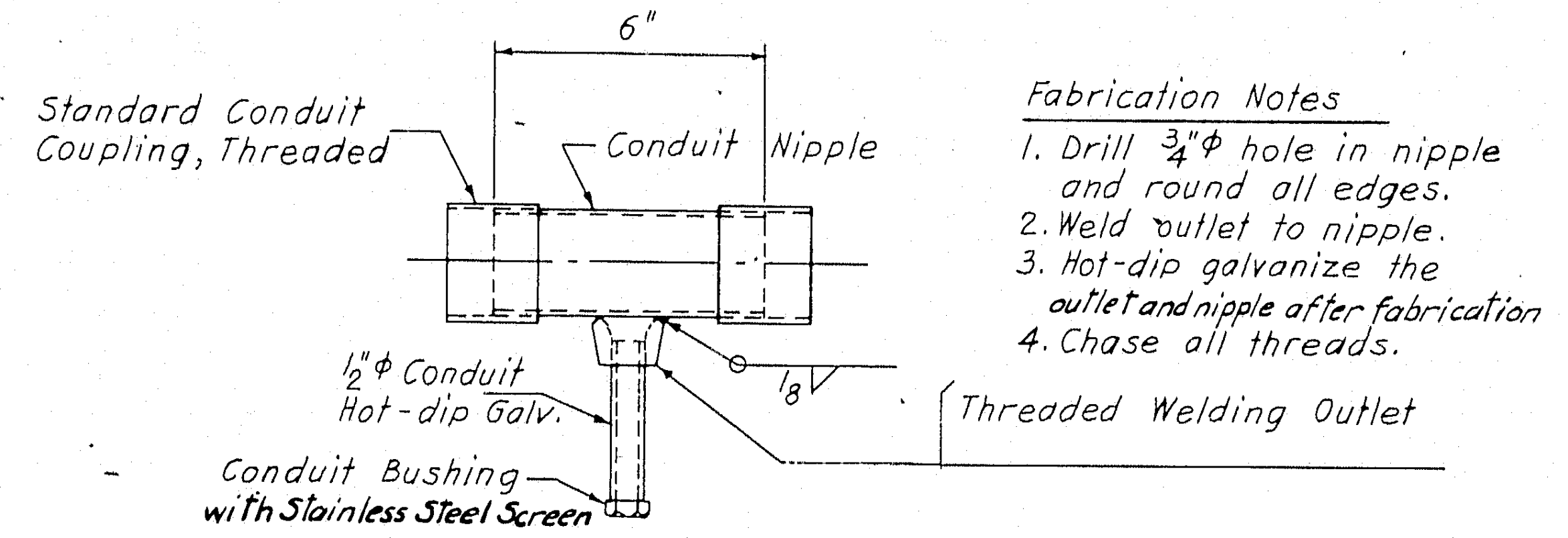

6"
Standard Conduit Coupling, Threaded
Conduit Nipple
1/2"ϕ Conduit Hot-dip Galv.
1/8
Conduit Bushing with Stainless Steel Screen
Threaded Welding Outlet

Fabrication Notes
1. Drill 3/4"ϕ hole in nipple and round all edges.
2. Weld outlet to nipple.
3. Hot-dip galvanize the outlet and nipple after fabrication
4. Chase all threads.

DETAIL "B"
TYPICAL CONDUIT DRAIN
Scale: 3" = 1'-0"

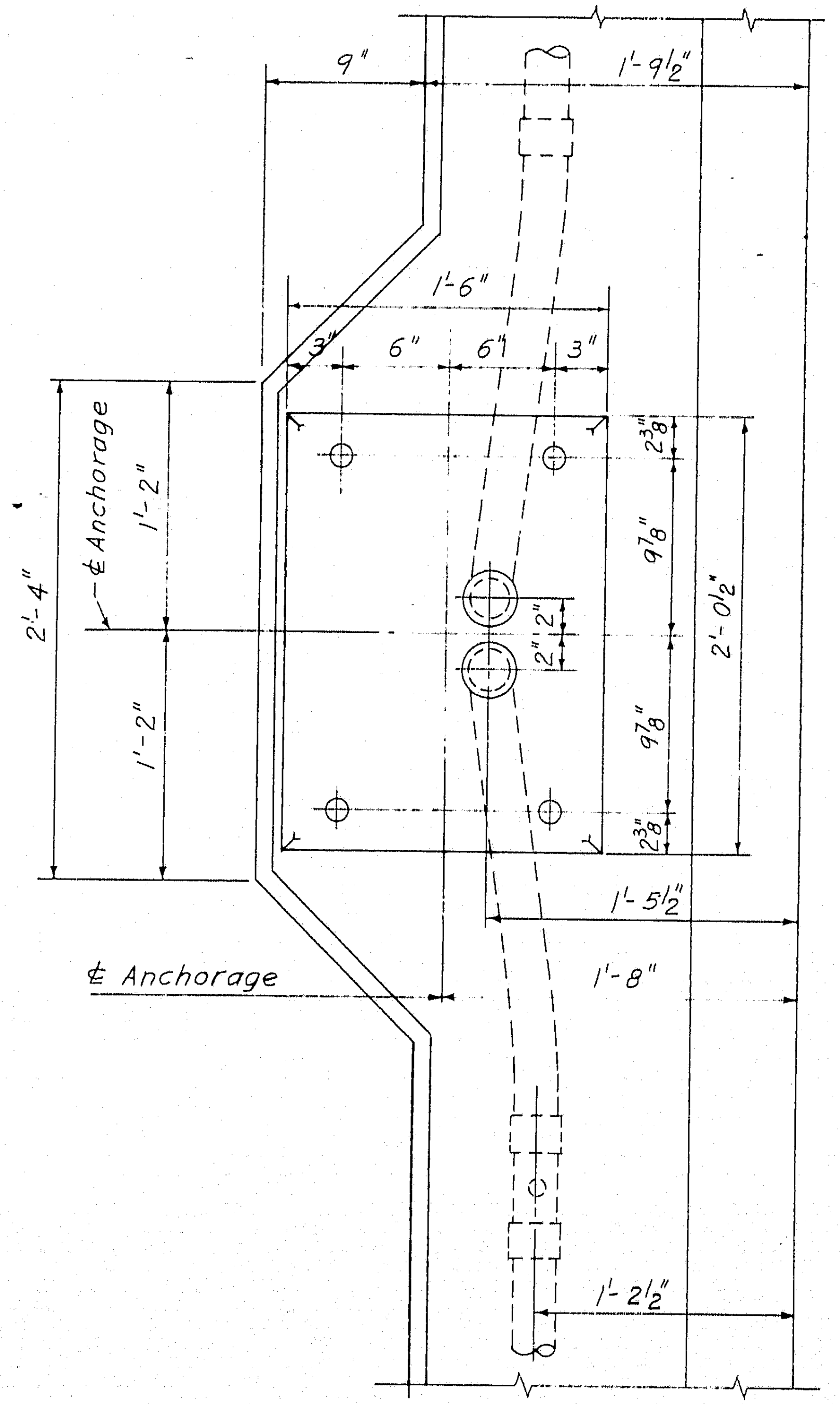

9"
1'-9 1/2"
1'-6"
3"
6"
6"
3"
2'-4"
℄ Anchorage
1'-2"
1'-2"
2 3/8"
9 7/8"
2'-0 1/2"
2"
2"
9 7/8"
2 3/8"
1'-5 1/2"
℄ Anchorage
1'-8"
1'-2 1/2"

Note:
Anchor rods to be set by steel template.

SECTION C-C
Scale: 1 1/2" = 1'-0"

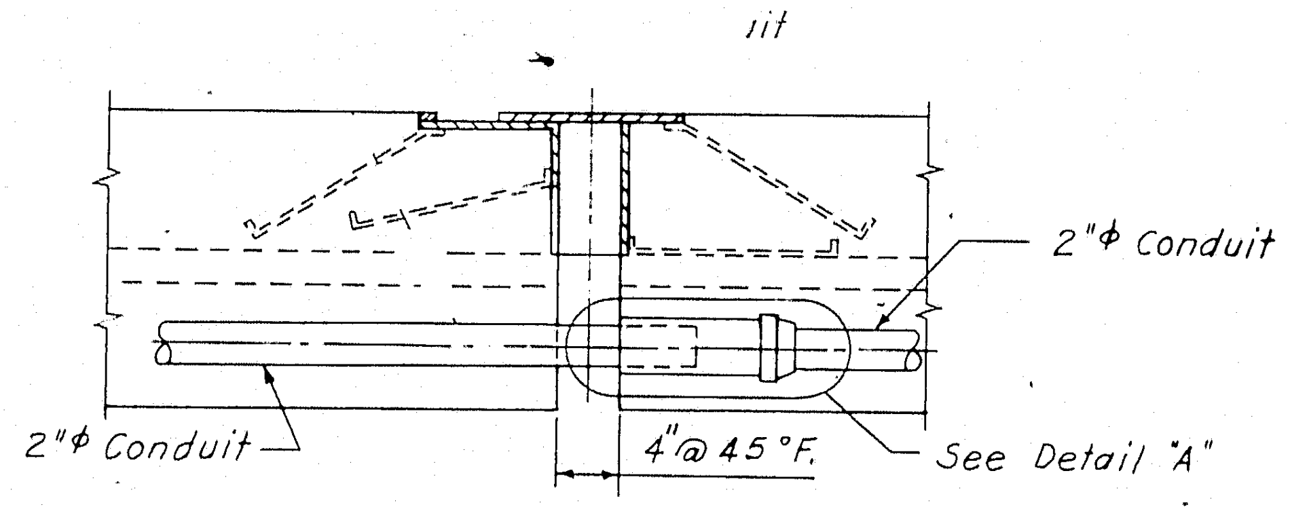

2"ϕ Conduit
2"ϕ Conduit
4"@45°F.
See Detail "A"

TYPICAL DETAIL AT EXPANSION
JOINT ON APPROACH SPANS
Scale: 1" = 1'-0"

Note:
Expansion joint at 1 1/2"ϕ conduit for sign lighting to be similar except oversize sleeve to be 2"ϕ.

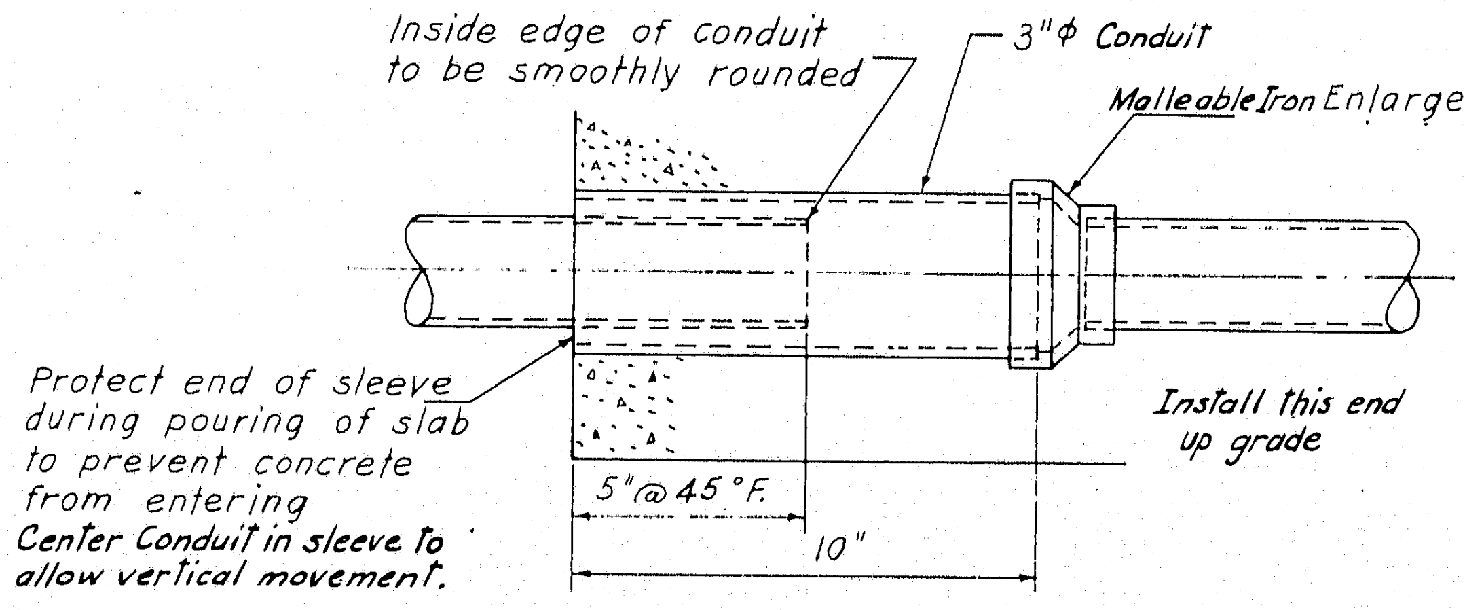

Inside edge of conduit to be smoothly rounded
3"ϕ Conduit
Malleable Iron Enlarger 2"ϕ to 3"ϕ
Protect end of sleeve during pouring of slab to prevent concrete from entering
Center Conduit in sleeve to allow vertical movement.
Install this end up grade
5"@45°F.
10"

DETAIL "A"
Scale: 3" = 1'-0"

Note:
For Section Marks B-B see Sheet 41.

4

DESIGN — E.D.
TRACE — K.A.S.
CHECK — H.B. Hyatt

BRIDGE NO.
IN CHARGE OF — Richard W. Christie

NEW HAMPSHIRE
DEPARTMENT OF PUBLIC WORKS AND HIGHWAYS
AND
MAINE STATE HIGHWAY COMMISSION
INTERSTATE 95 BRIDGE
OVER
PISCATAQUA RIVER
BETWEEN
PORTSMOUTH, NEW HAMPSHIRE AND KITTERY, MAINE
APPROACH SPANS

CONDUIT DETAILS

SHEET 42 OF 44

HARDESTY & HANOVER
CONSULTING ENGINEERS
NEW YORK, N. Y.

129-93

B. P. R. REG. NO.	STATE	PROJECT NUMBER	SHEET NO.	TOTAL SHEETS
1	MAINE	I-95-1(22)16	43	44

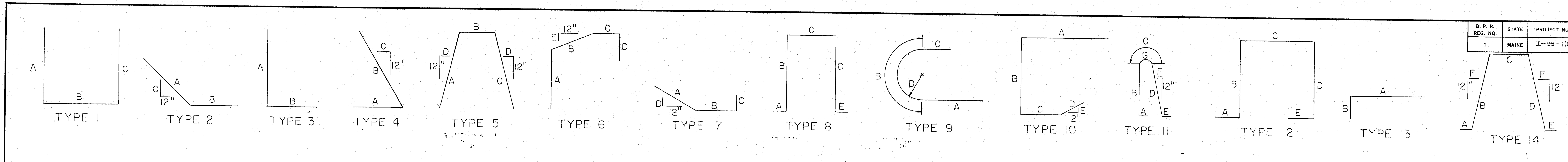

NEW HAMPSHIRE DECK

MARK	LENGTH	NO. REQD	TYPE	DETAIL DIMENSIONS A	B	C	D	E	F
STA. 541+55 TO STA. 538+33									
SC400	7'-5	644	11	0'-4	3'-4	0'-4	3'-3	0'-4	1 1/4
SC401	4'-1	843	12	0'-4	1'-5	0'-11	1'-5	0'-4	
SC500	40'-0	2510	STR						
SC501	40'-0	106	STR			(GALVANIZED)			
SC502	22'-2 TO 16'-8	137	STR			(GALVANIZED)*			
SC503	16'-8 TO 11'-2	137	STR			(GALVANIZED)			
MC504	16'-7	12	STR						
MC505	18'-11	180	STR						
MC506	16'-6	12	STR						
WC507	19'-2	30	STR						
WC508	17'-2	4	STR						
WC509	18'-7	30	STR						
WC510	16'-4	2	STR						
WC511	15'-10	2	STR						
SC600	52'-0	1283	13	51'-9	0'-4				
SC601	51'-8	1283	STR						
STA. 538+33 TO STA. 534+50									
SD400	7'-5	765	11	0'-4	3'-4	0'-4	3'-3	0'-4	1 1/4
SD401	4'-1	1005	12	0'-4	1'-5	0'-11	1'-5	0'-4	
SD500	40'-0	2890	STR						
SD501	45'-0 TO 33'-0	137	STR						
SD502	33'-0 TO 25'-0	137	STR						
WD503	17'-0	4	STR						
MD504	18'-11	216	STR						
MD505	16'-8	24	STR						
WD506	19'-5	36	STR						
MD507	16'-3	4	STR						
WD508	18'-6	36	STR						
SD600	52'-0	728	13	51'-9	0'-4				
SD601	51'-8	728	STR						
SD602	52'-0 TO 52'-6	800	13	51'-9 TO 52'-3	0'-4				
SD603	51'-9 TO 52'-3	800	STR						

NEW HAMPSHIRE DECK (CONT'D)

MARK	LENGTH	NO. REQD	TYPE	DETAIL DIMENSIONS A	B	C	D	E	F
STA. 534+50 TO STA. 529+71									
SE400	7'-5	951	11	0'-4	3'-4	0'-4	3'-3	0'-4	1 1/4
SE401	4'-1	1251	12	0'-4	1'-5	0'-11	1'-5	0'-4	
SE500	40'-0	4244	STR						
SE501	31'-0 TO 15'-0	158	STR						
SE502	53'-0 TO 42'-0	158	STR						
ME503	16'-8	24	STR						
ME504	18'-11	276	STR						
WE505	16'-11	4	STR						
WE506	19'-5	46	STR						
WE507	16'-2	4	STR						
WE508	18'-5	46	STR						
SE600	52'-6 TO 60'-9	937	13	52'-3 TO 60'-6	0'-4				
SE601	52'-3 TO 60'-6	937	STR						
SE602	52'-6 TO 56'-7	963	13	52'-3 TO 56'-4	0'-4				
SE603	52'-3 TO 56'-4	963	STR						
STA. 529+71 TO STA. 527+10									
SF400	7'-5	522	11	0'-4	3'-4	0'-4	3'-3	0'-4	1 1/4
SF401	4'-1	690	12	0'-4	1'-5	0'-11	1'-5	0'-4	
SF500	40'-0	2282	STR						
SF501	39'-0 TO 33'-0	158	STR						
SF502	33'-0 TO 23'-0	179	STR						
MF503	16'-5	24	STR						
MF504	18'-6	144	STR						
WF505	16'-8	4	STR						
WF506	19'-1	24	STR						
WF507	15'-11	4	STR						
WF508	18'-1	24	STR						
SF600	60'-9 TO 69'-6	515	13	60'-6 TO 69'-3	0'-4				
SF601	60'-6 TO 69'-3	515	STR						
SF602	56'-7 TO 61'-3	527	13	56'-4 TO 61'-0	0'-4				
SF603	56'-4 TO 61'-0	527	STR						

NEW HAMPSHIRE DECK (CONT'D)

MARK	LENGTH	NO. REQD	TYPE	DETAIL DIMENSIONS A	B	C	D	E	F
STA. 527+10 TO STA. 524+25									
SG400	7'-5	571	11	0'-4	3'-4	0'-4	3'-3	0'-4	1 1/4
SG401	4'-1	752	12	0'-4	1'-5	0'-11	1'-5	0'-4	
SG500	40'-0	3091	STR						
SG501	15'-0	179	STR						
SG502	15'-0 TO 16'-0	200	STR						
XG503	16'-6	32	STR						
XG504	18'-11	208	STR						
SG600	43'-3 TO 46'-6	571	13	43'-0 TO 46'-3	0'-4				
SG601	39'-6 TO 42'-2	571	STR						
SG602	61'-3 TO 68'-11	571	13	61'-0 68'-8	0'-4				
SG603	61'-0 TO 68'-8	571	STR						
SG604	28'-3 TO 30'-3	571	STR						
SG605	31'-9 TO 34'-4	571	STR						

NEW HAMPSHIRE PYLONS

MARK	LENGTH	NO. REQD	TYPE	DETAIL DIMENSIONS A	B	C	D	E	F
PA501	5'-6	4	STR						
PA502	7'-8	2	1	3'-6	10"	3'-6			
PA503	4'-5	2	3	3'-10	8"				
PA504	9'-0	2	1	4'-2	10"	4'-2			
PA505	9'-8	2	1	4'-6	10"	4'-6			
PA506	3'-5	2	1	2"	11"	2'-6			
PA507	4'-5	4	1	2"	11"	3'-6			
PA508	7'-8	8	1	3'-6	10"	3'-6			
PA509	1'-10	4	STR						
PA510	8'-5 TO 7'-11	8	1	3'-10 TO 3'-7	11"	3'-10 TO 3'-7			
PA511	4'-5	2	1	1'-10	11"	1'-10			

SOUTH ABUTMENT AND APPROACH SLABS

MARK	LENGTH	NO. REQD	TYPE	DETAIL DIMENSIONS A	B	C	D	E	F
WC500	17'-6	12	STR						
WC501	23'-6	30	STR						
WC502	7'-4	138	1	4'-4	1'-8	1'-6			
WC503	4'-4	138	STR						
WC504	7'-1	138	1	3'-2	0'-11	3'-2			
WC505	29'-6	10	STR						
WC510	22'-6	4	STR						
WC511	19'-0	8	STR						
WC700	17'-6	4	STR						
WC701	23'-6	6	STR						
WC702	29'-6	2	STR						
ZA401	3'-6	34	7	0'-10	2'-6	0'-4	1 1/2 TO 7 3/4	(2 SETS OF 17	
ZA402	5'-7	4	8	0'-4	2'-6	0'-3	2'-6	0'-4	
ZA403	7'-3	1	8	0'-4	3'-4	0'-3	3'-4	0'-4	
ZA500	19'-2 TO 19'-8	12	STR						
ZA501	23'-6	48	STR						
ZA502	26'-6	48	STR						
ZA503	19'-2 TO 19'-6	12	STR						
ZA504	5'-4	140	10	4'-0	0'-7	0'-3	0'-9	12	
ZA506	19'-0	24	STR						
ZA800	21'-0	142	STR						
ZB400	3'-4 TO 3'-7	19	5	1'-5	0'-6 TO 0'-9	1'-5	1 1/2		
ZB401	11'-2	2	STR						
ZB402	11'-2	2	STR						
ZB403	12'-0	6	STR						
ZB404	12'-0	4	STR						
ZB405	8'-0	2	STR						
ZB406	2'-3	4	7	0'-10	1'-1	0'-4	7 3/4		

4

DESIGN — J. Fedun
TRACE — M. Dexter
CHECK — D.D. Holderman

BRIDGE NO. IN CHARGE OF — R.W. Christie

NEW HAMPSHIRE
DEPARTMENT OF PUBLIC WORKS AND HIGHWAYS
AND
MAINE STATE HIGHWAY COMMISSION
INTERSTATE 95 BRIDGE
OVER
PISCATAQUA RIVER
BETWEEN
PORTSMOUTH, NEW HAMPSHIRE AND KITTERY, MAINE

HARDESTY & HANOVER
CONSULTING ENGINEERS
NEW YORK, N. Y.

BAR LISTS I

SHEET 43 OF 44

129-94

B. P. R. REG. NO.	STATE	PROJECT NUMBER	SHEET NO.	TOTAL SHEETS
1	MAINE	I-95-1(22)16	44	44

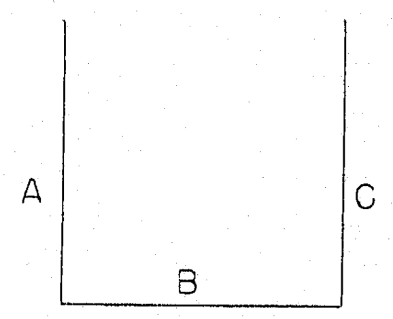

TYPE 1

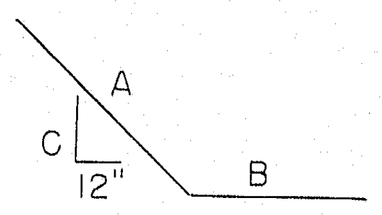

TYPE 2

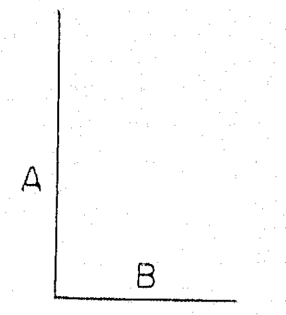

TYPE 3

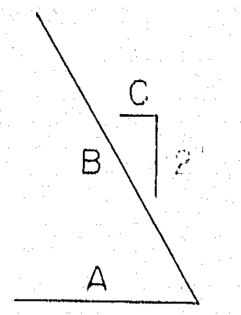

TYPE 4

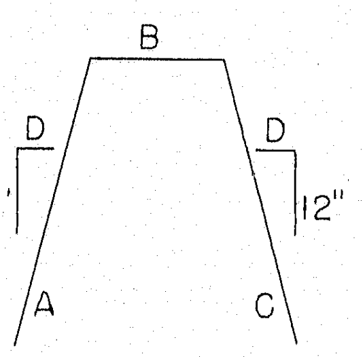

TYPE 5

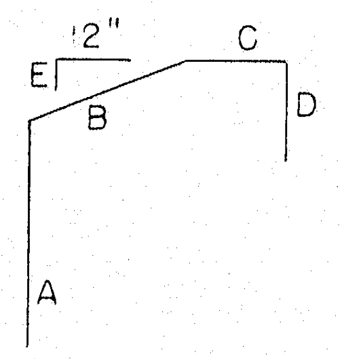

TYPE 6

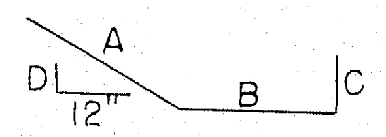

TYPE 7

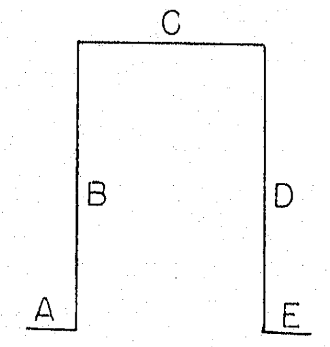

TYPE 8

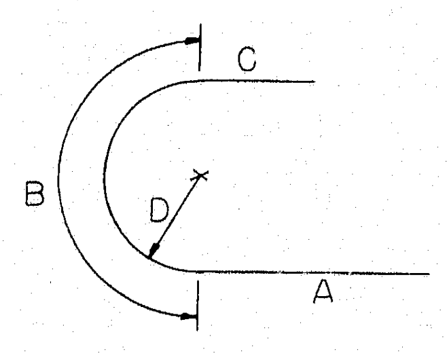

TYPE 9

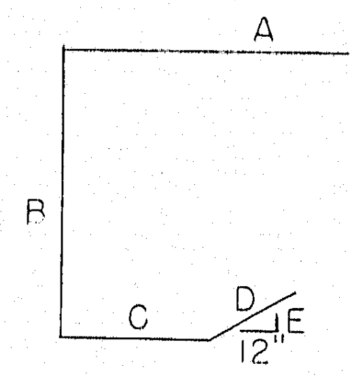

TYPE 10

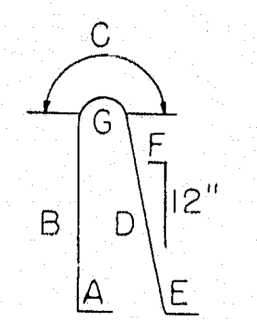

TYPE 11

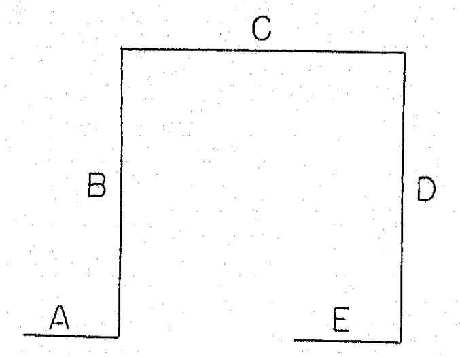

TYPE 12

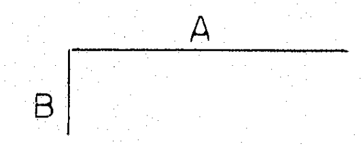

TYPE 13

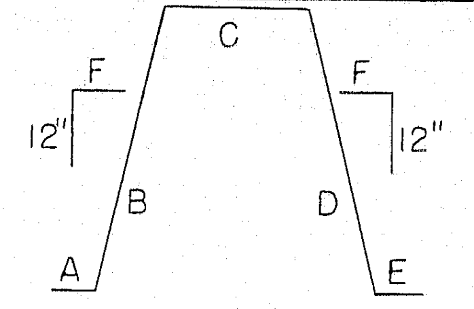

TYPE 14

MAINE DECK

MARK	LENGTH	No. REQD	TYPE	DETAIL DIMENSIONS					
				A	B	C	D	E	F
STA.	556+62	TO STA. 559+89							
SC450	7'-5	654	11	0'-4	3'-4	0'-4	3'-3	0'-4	1 1/4
SC451	4'-1	858	12	0'-4	1'-5	0'-11	1'-5	0'-4	
SC550	40'-0	2236	STR						
SC551	24'-0	274	STR						
SC552	40'-0	274	STR			(GALVANIZED)*			
SC553	40'-0	106	STR			(GALVANIZED)			
XC554	19'-2	240	STR						
XC555	16'-1	16	STR						
XC556	16'-10	16	STR						
SC650	52'-0	1304	13	51'-9	0'-4				
SC651	51'-8	1304	STR						
STA.	559+89	TO STA. 562+80							
SD450	7'-5	580	11	0'-4	3'-4	0'-4	3'-3	0'-4	1 1/4
SD451	4'-1	760	12	0'-4	1'-5	0'-11	1'-5	0'-4	
SD550	40'-0	2236	STR						
SD551	22'-6	274	STR						
XD552	19'-4	208	STR						
XD553	16'-10	32	STR						
SD650	52'-0	1159	13	51'-9	0'-4				
SD651	51'-8	1159	STR						
STA.	562+80	TO STA. 565+40							
SE450	7'-5	520	11	0'-4	3'-4	0'-4	3'-3	0'-4	1 1/4
SE451	4'-1	682	12	0'-4	1'-5	0'-11	1'-5	0'-4	
SE550	40'-0	1858	STR						
SE551	29'-6	274	STR						
XE552	18'-6	192	STR						
XE553	16'-3	32	STR						
[illegible]	[illegible]	[illegible]	[illegible]						
SE650	52'-0	1039	13	51'-9	0'-4				
SE651	51'-8	1039	STR						

MAINE DECK (CONT'D)

MARK	LENGTH	No. REQD	TYPE	DETAIL DIMENSIONS					
				A	B	C	D	E	F
STA.	565+40	TO STA. 569+25							
SF450	7'-5	760	11	0'-4	3'-4	0'-4	3'-3	0'-4	1 1/4
SF451	4'-1	994	12	0'-4	1'-5	0'-11	1'-5	0'-4	
SF550	40'-0	2890	STR						
SF551	39'-6	274	STR						
XF552	19'-1	288	STR						
XF553	16'-9	16	STR						
XF554	17'-3	16	STR						
SF650	52'-0	1518	13	51'-9	0'-4				
SF651	51'-8	1518	STR						

MAINE PYLONS

MARK	LENGTH	No. REQD	TYPE	DETAIL DIMENSIONS					
				A	B	C	D	E	F
PB551	5'-6	4	STR						
PB552	7'-8	2	1	3'-6	10"	3'-6			
PB553	8'-4	2	1	3'-10	10"	3'-10			
PB554	4'-9	2	3	4'-2	8"				
PB555	9'-8	2	1	4'-6	10"	4'-6			
PB556	4'-1	2	1	10"	11"	2'-6			
PB557	5'-1	4	1	10"	11"	3'-6			
PB558	7'-8	8	1	3'-6	10"	3'-6			
PB559	1'-2	6	STR						
PB560	8'-5 TO 7'-11	8	1	3'-10 TO 3'-7	11"	3'-10 TO 3'-7			
PB561	2'-2	2	STR						

NORTH ABUTMENT

MARK	LENGTH	No. REQD	TYPE	DETAIL DIMENSIONS					
				A	B	C	D	E	F
RC550	18'-6	12	STR						
RC551	29'-6	20	STR						
RC552	7'-3	98	1	4'-3	1'-8	1'-6			
RC553	4'-3	98	STR						
RC554	7'-1	98	1	3'-2	0'-11	3'-2			
RC555	22'-6	4	STR						
RC556	20'-0	8	STR						
RC750	18'-6	4	STR						
RC751	29'-6	4	STR						

4

DESIGN — J. Fedun
TRACE — M. Dexter
CHECK — D.D. Hokkeeman

BRIDGE NO.
IN CHARGE OF — R.W. Christie

NEW HAMPSHIRE
DEPARTMENT OF PUBLIC WORKS AND HIGHWAYS
AND
MAINE STATE HIGHWAY COMMISSION
INTERSTATE 95 BRIDGE
OVER
PISCATAQUA RIVER
BETWEEN
PORTSMOUTH, NEW HAMPSHIRE AND KITTERY, MAINE

HARDESTY & HANOVER
CONSULTING ENGINEERS
NEW YORK, N. Y.

BAR LISTS II

SHEET 44 OF 44

129-95

B.P.R. REG. NO.	STATE	PROJECT NUMBER	SHEET NO.	TOTAL SHEETS
1	MAINE	[illegible]	[illegible]	[illegible]

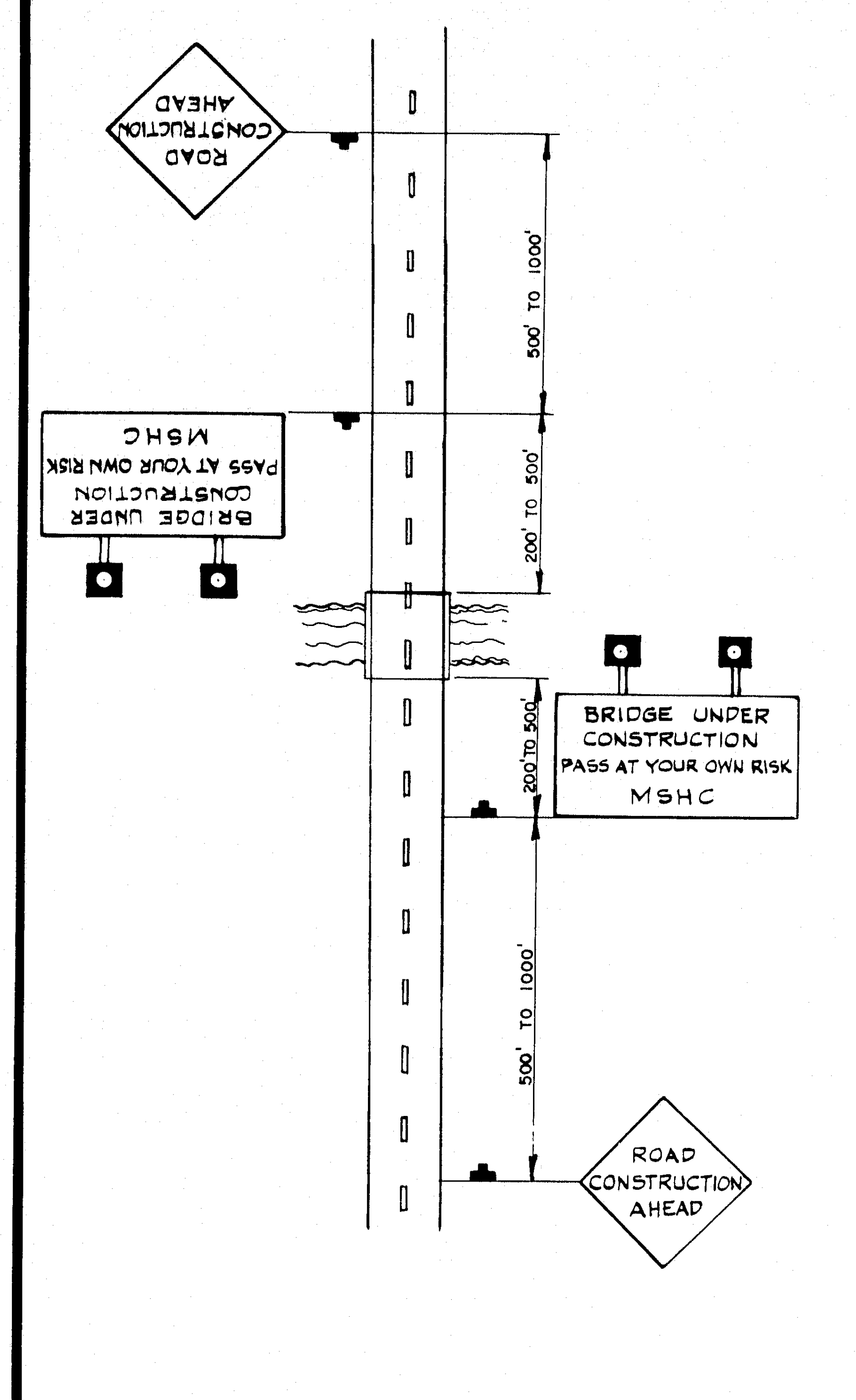
ROAD CONSTRUCTION AHEAD
500' TO 1000'
BRIDGE UNDER CONSTRUCTION PASS AT YOUR OWN RISK MSHC
200' TO 500'
BRIDGE UNDER CONSTRUCTION PASS AT YOUR OWN RISK MSHC
200' TO 500'
500' TO 1000'
ROAD CONSTRUCTION AHEAD

WHEN DETOURS OR LANE CLOSURES ARE NOT REQUIRED.

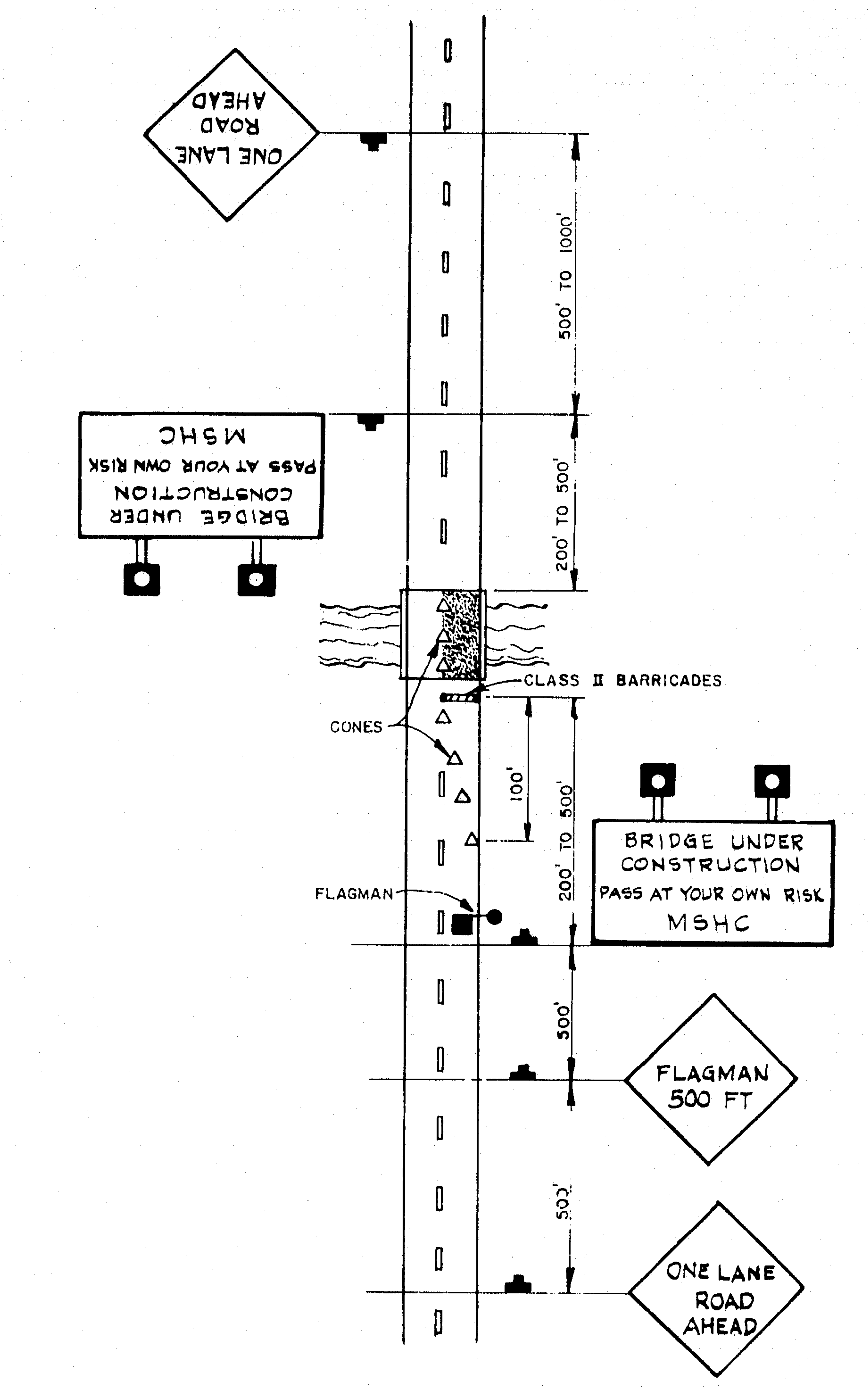
ONE LANE ROAD AHEAD
500' TO 1000'
BRIDGE UNDER CONSTRUCTION PASS AT YOUR OWN RISK MSHC
200' TO 500'
CLASS II BARRICADES
CONES
100'
200' TO 500'
FLAGMAN
BRIDGE UNDER CONSTRUCTION PASS AT YOUR OWN RISK MSHC
500'
FLAGMAN 500 FT
500'
ONE LANE ROAD AHEAD

MINOR OPERATIONS OF SHORT DURATION REQUIRING LANE CLOSURE

GENERAL NOTES

1. DISTANCES SHOWN ON PLANS ARE APPROXIMATE
2. USE FLAGMAN AND FLAGMAN SIGNS WHEN REQUIRED BY THE ENGINEER.
3. MINIMUM SIGNING REQUIREMENTS ARE SHOWN FOR THE MOST FREQUENT SITUATIONS ONLY. FOR SIGNING PROJECTS NOT DESCRIBED OR REQUIRING MODIFICATIONS TO THOSE SHOWN THE TRAFFIC CONTROL DEVICES SHALL BE INSTALLED AS THE ENGINEER DIRECTS.
4. ALL TRAFFIC CONTROL DEVICES SHALL CONFORM TO THE APPLICABLE SPECIFICATIONS OF THE MANUAL ON UNIFORM TRAFFIC CONTROL DEVICES FOR STREETS AND HIGHWAYS AND STATE OF MAINE SHC "STANDARD SPECIFICATIONS HIGHWAYS AND BRIDGES REVISIONS OF JUNE 1968."
5. ALL SIGNS THAT ARE TO CONVEY MESSAGES DURING HOURS OF DARKNESS SHALL BE REFLECTORIZED WITH REFLECTIVE SHEETING COMPLYING WITH FEDERAL SPECIFICATIONS L-S-300. ILLUMINATION MAY BE REQUIRED IN ACCORDANCE WITH SECTION 5B-2 OF THE MANUAL ON TRAFFIC CONTROL DEVICES FOR STREETS AND HIGHWAYS.
6. ALL TRAFFIC CONTROL DEVICES SHALL BE FURNISHED BY THE CONTRACTOR UNLESS OTHERWISE SPECIFIED.
7. TRAFFIC CONTROL DEVICES SHALL BE ERECTED PRIOR TO THE START OF CONSTRUCTION OR MAINTENANCE OPERATION AND SHALL BE MAINTAINED DURING THE TIME SUCH SPECIAL CONDITIONS EXIST. THE CONTROL DEVICES SHALL REMAIN IN PLACE FOR AS LONG AS CONTROLS ARE NECESSARY BUT SHALL BE REMOVED IMMEDIATELY THEREAFTER.
8. EXISTING TRAFFIC CONTROL DEVICES WHICH TEND TO CONFUSE TRAFFIC SHALL BE REMOVED OR COVERED BY THE CONTRACTOR. EXISTING CENTER LINE STRIPES WHICH TEND TO DIRECT TRAFFIC INTO THE AREA BEING DETOURED SHALL OBLITERATED BY THE CONTRACTOR TO THE APPROVAL OF THE ENGINEER.
9. WARNING LIGHTS SHALL BE INSTALLED ABOVE EACH "BRIDGE UNDER CONSTRUCTION" SIGN AND IN OTHER LOCATIONS WHEN REQUIRED BY THE ENGINEER.
WHEN POWER IS NOT AVAILABLE HIGH INTENSITY BATTERY POWERED FLASHERS SHALL BE USED.
10. THE SIZE OF THE LETTERING ON SIGNS BEARING MESSAGES AND THEIR BORDERS SHALL BE IN THE SAME PROPORTION AS THE EXAMPLES SHOWN IN THE "MANUAL OF UNIFORM TRAFFIC CONTROL DEVICES."
IN GENERAL THE LETTERING SHALL NOT BE LESS THAN 7" IN HEIGHT EXCEPT AS NOTED UNDER PARAGRAPH 5B-16 OF THE MANUAL.
11. FOR SIGN SIZES NOT SHOWN ON PLANS SEE "TYPICAL INSTALLATION - ALL SIGNS."
12. THE MINIMUM DIMENSION ABOVE GROUND FOR ALL SIGNS INCLUDING DIRECTIONAL ARROWS SHALL BE 3 FEET.

BRUNING 44-131

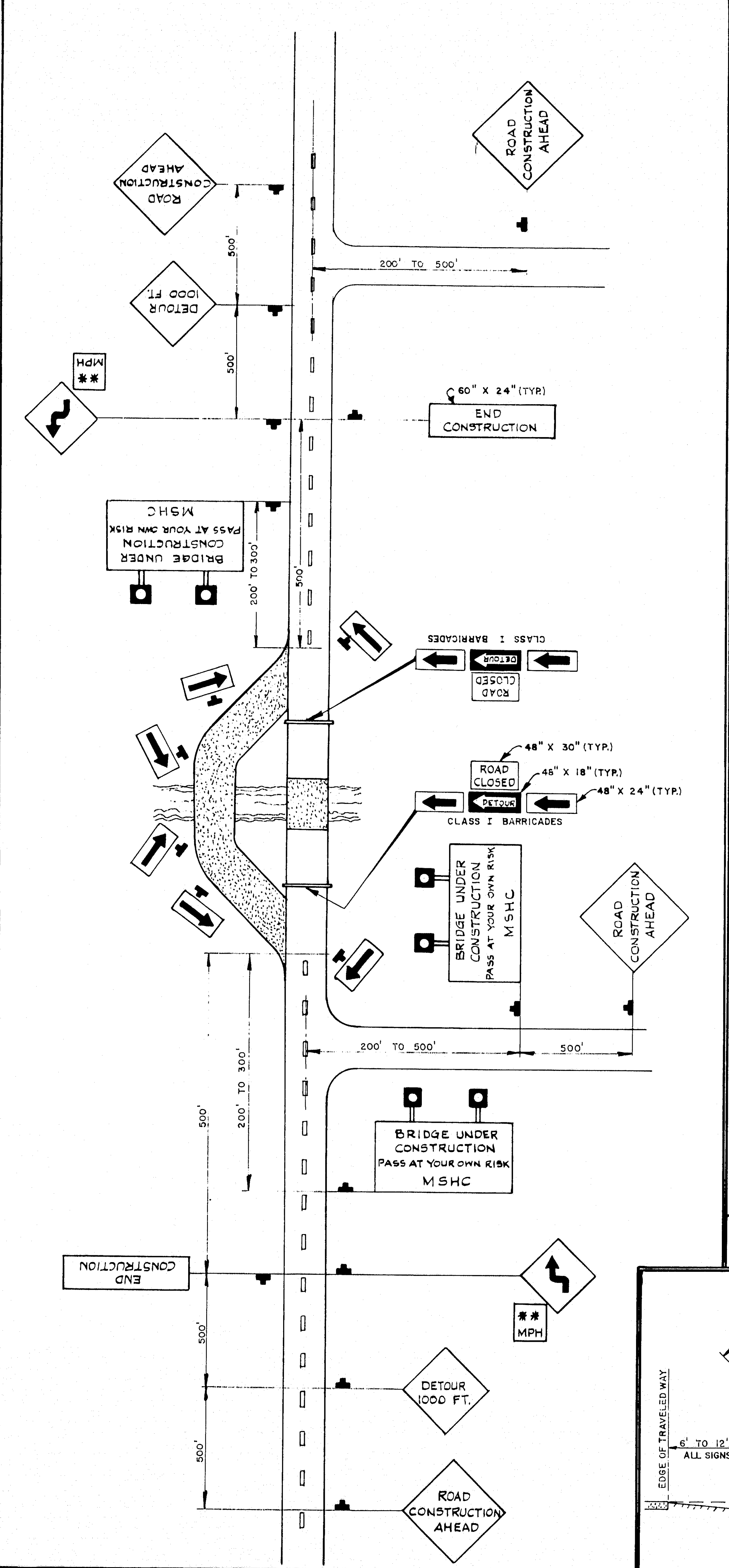
ROAD CONSTRUCTION AHEAD
ROAD CONSTRUCTION AHEAD
500'
200' TO 500'
DETOUR 1000 FT.
500'
** MPH
60" X 24" (TYP.)
END CONSTRUCTION
BRIDGE UNDER CONSTRUCTION PASS AT YOUR OWN RISK MSHC
200' TO 300'
500'
CLASS I BARRICADES
DETOUR
ROAD CLOSED
48" X 30" (TYP.)
ROAD CLOSED
48" X 18" (TYP.)
DETOUR
48" X 24" (TYP.)
CLASS I BARRICADES
BRIDGE UNDER CONSTRUCTION PASS AT YOUR OWN RISK MSHC
ROAD CONSTRUCTION AHEAD
200' TO 500'
500'
200' TO 300'
500'
BRIDGE UNDER CONSTRUCTION PASS AT YOUR OWN RISK MSHC
END CONSTRUCTION
** MPH
500'
DETOUR 1000 FT.
500'
ROAD CONSTRUCTION AHEAD

FOR ALL TRAFFIC CONDITIONS WHEN DETOURS ARE REQUIRED

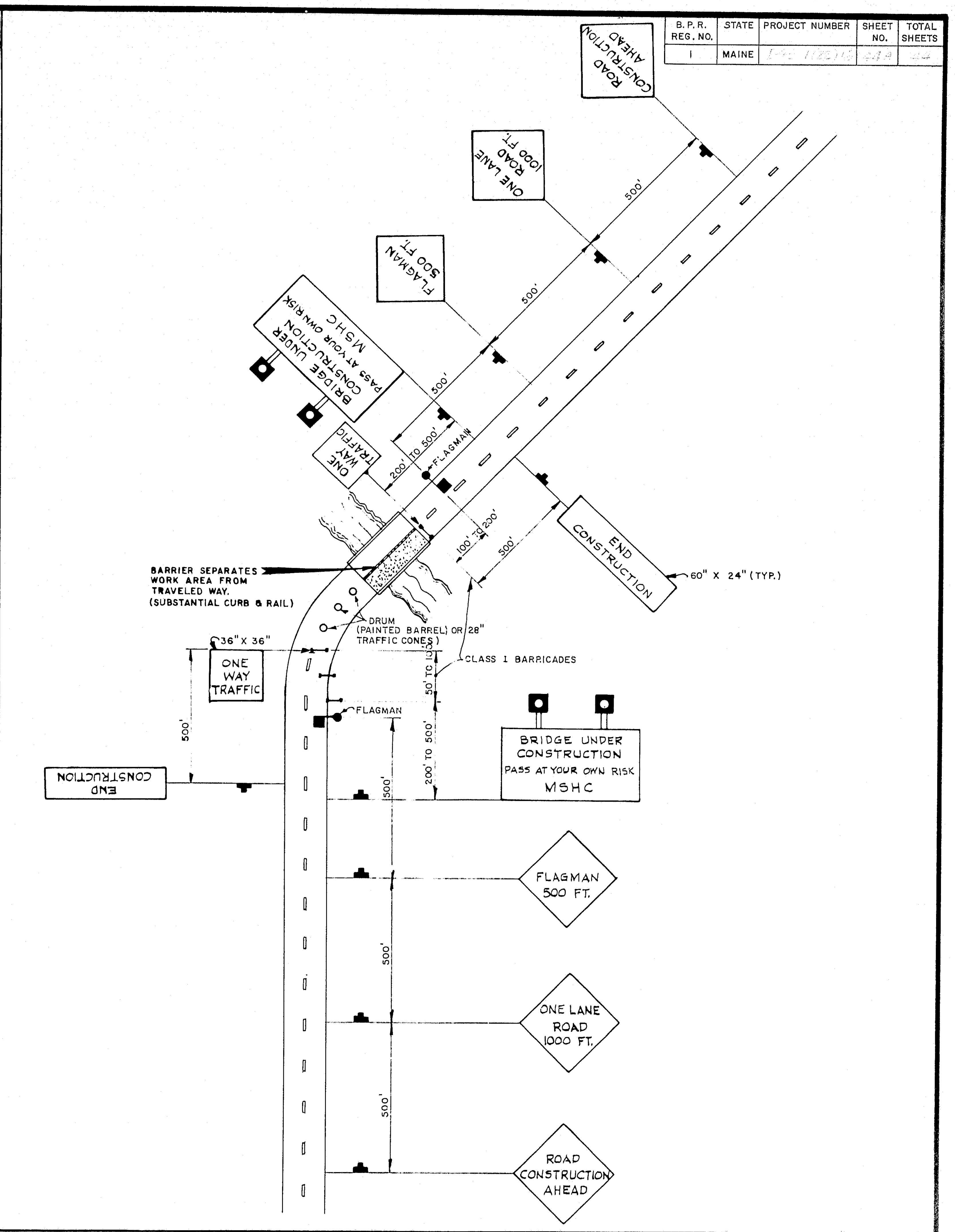
ROAD CONSTRUCTION AHEAD
ONE LANE ROAD 1000 FT.
500'
FLAGMAN 500 FT.
500'
BRIDGE UNDER CONSTRUCTION PASS AT YOUR OWN RISK MSHC
500'
ONE WAY TRAFFIC
200' TO 500'
FLAGMAN
100' TO 200'
500'
END CONSTRUCTION
60" X 24" (TYP.)
BARRIER SEPARATES WORK AREA FROM TRAVELED WAY. (SUBSTANTIAL CURB & RAIL)
DRUM (PAINTED BARREL) OR 28" TRAFFIC CONES
CLASS I BARRICADES
36" X 36"
ONE WAY TRAFFIC
500'
FLAGMAN
100' TO 200'
200' TO 500'
END CONSTRUCTION
BRIDGE UNDER CONSTRUCTION PASS AT YOUR OWN RISK MSHC
500'
FLAGMAN 500 FT.
500'
ONE LANE ROAD 1000 FT.
500'
ROAD CONSTRUCTION AHEAD

MAJOR OPERATIONS OF LONG DURATION REQUIRING LANE CLOSURE

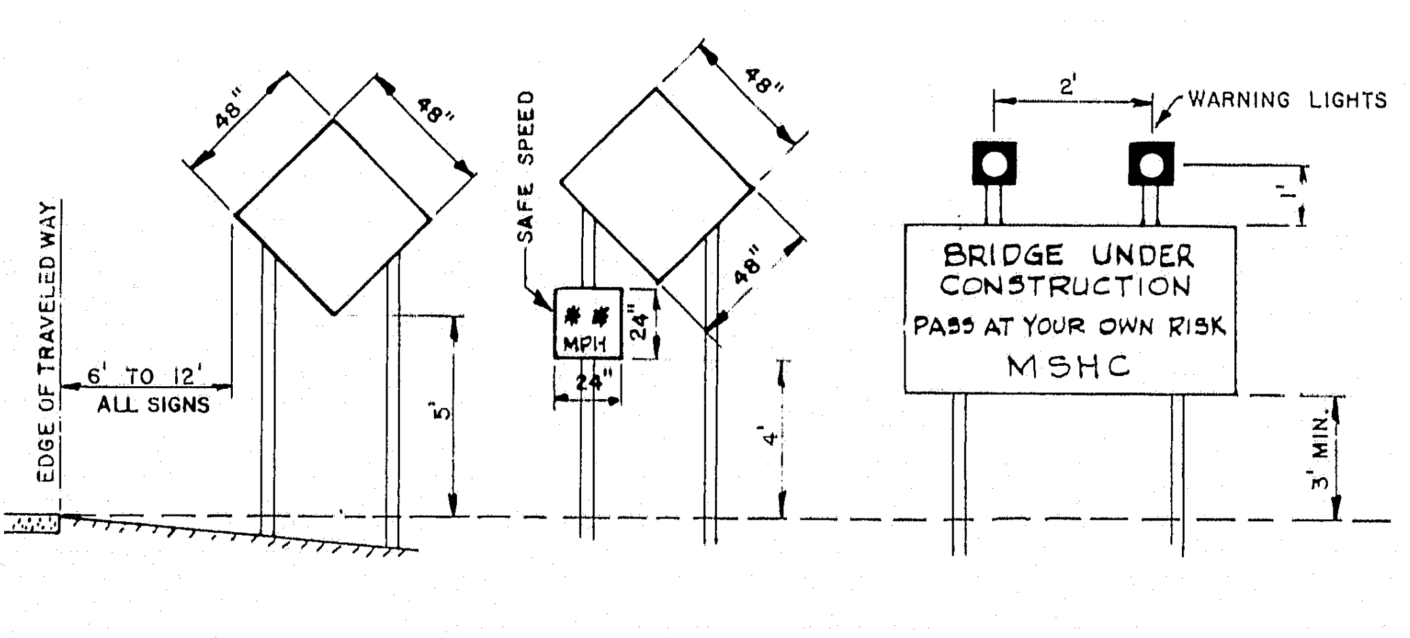
48"
48"
EDGE OF TRAVELED WAY
6' TO 12' ALL SIGNS
5'
SAFE SPEED
** MPH
24"
24"
48"
48"
4'
2'
WARNING LIGHTS
1'
BRIDGE UNDER CONSTRUCTION PASS AT YOUR OWN RISK MSHC
3' MIN.

TYPICAL INSTALLATION - ALL SIGNS
(SEE NOTE 12)

MAINE STATE HIGHWAY COMMISSION
AUGUSTA, MAINE

STANDARD DETAILS
(BD 111 - 69)

TRAFFIC CONTROL DEVICES
FOR BRIDGE PROJECTS ON 2-LANE HIGHWAYS

JUNE 1969

129-96

B.P.R. REG. NO.	STATE	PROJECT NUMBER	SHEET NO.	TOTAL SHEETS
1	MAINE	I-95-1(22)16	1	54

NEW HAMPSHIRE DEPARTMENT OF PUBLIC WORKS AND HIGHWAYS
MAINE STATE HIGHWAY COMMISSION

PISCATAQUA RIVER BRIDGE
INTERSTATE ROUTE 95
PROJECT NO. I-95-1 (22) 16

PORTSMOUTH, NEW HAMPSHIRE
COUNTY OF ROCKINGHAM
TO
KITTERY, MAINE
COUNTY OF YORK

LENGTH OF PROJECT 0.853 MILES
CONTRACT NO. 5 - RIVER BRIDGE SUPERSTRUCTURE

SHEET	TITLE
1	COVER SHEET
2	QUANTITY SUMMARY
3	GENERAL NOTES
4	PROJECT PLAN AND ELEVATION
5	GENERAL PLAN AND ELEVATION
6	TYPICAL SECTIONS
7-8	TRUSS LAYOUT
9-10	TRUSS STRESS SHEETS
11-18	TRUSS DETAILS
19-24	TRUSS SWAY FRAMES
25-29	DECK FRAMING PLANS
30-33	DECK SLAB LAYOUTS
34	TRUSS FLOOR DETAILS
35	STRUT AT L7
36-39	TRUSS ACCESS PLATFORMS
40-45	TRUSS SHOES
46	CONCRETE DETAILS
47	SCUPPER DRAINAGE
48	RAILING DETAILS
49-52	ELECTRICAL WORK
53	SIGN SUPPORTS
54	BAR LISTS

SPECIFICATIONS

1. MAINE STATE HIGHWAY COMMISSION. REVISION OF JUNE, 1968
2. SPECIAL PROVISIONS.
3. SUPPLEMENTAL SPECIFICATIONS.

TRAFFIC

AADT 1990	38,580
DHV	6,560
T	1 %
D	70 %
V	70 MPH

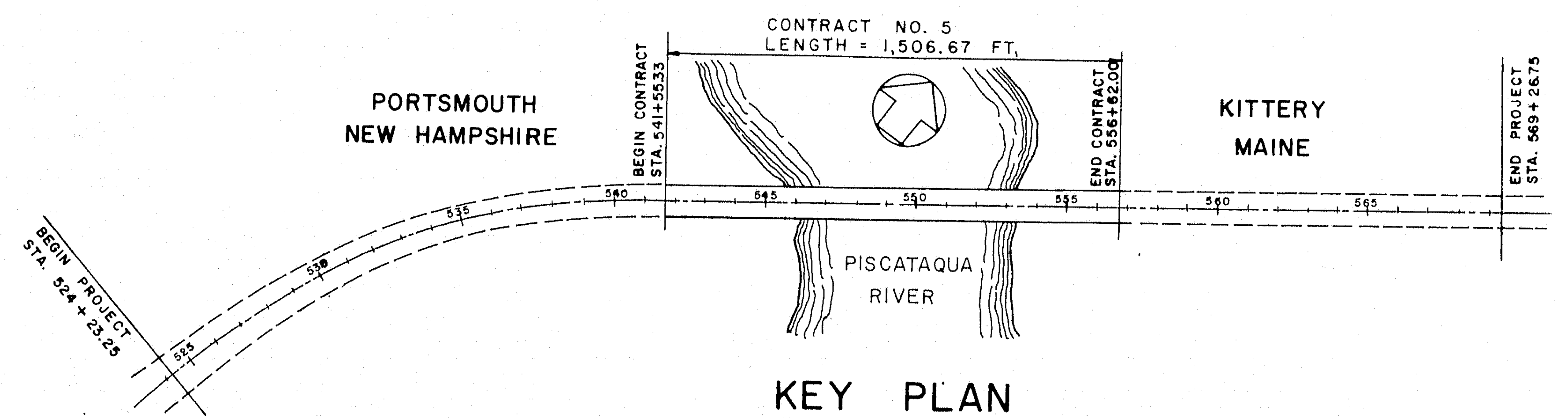
CONTRACT NO. 5
LENGTH = 1,506.67 FT.
PORTSMOUTH
NEW HAMPSHIRE
BEGIN CONTRACT STA. 541+55.33
END CONTRACT STA. 556+62.00
KITTERY
MAINE
END PROJECT STA. 569+26.75
BEGIN PROJECT STA. 524+23.25
525
530
535
540
545
550
555
560
565
PISCATAQUA RIVER

KEY PLAN

SCALE: 1"=400'

SYLVESTER L. POOR 187

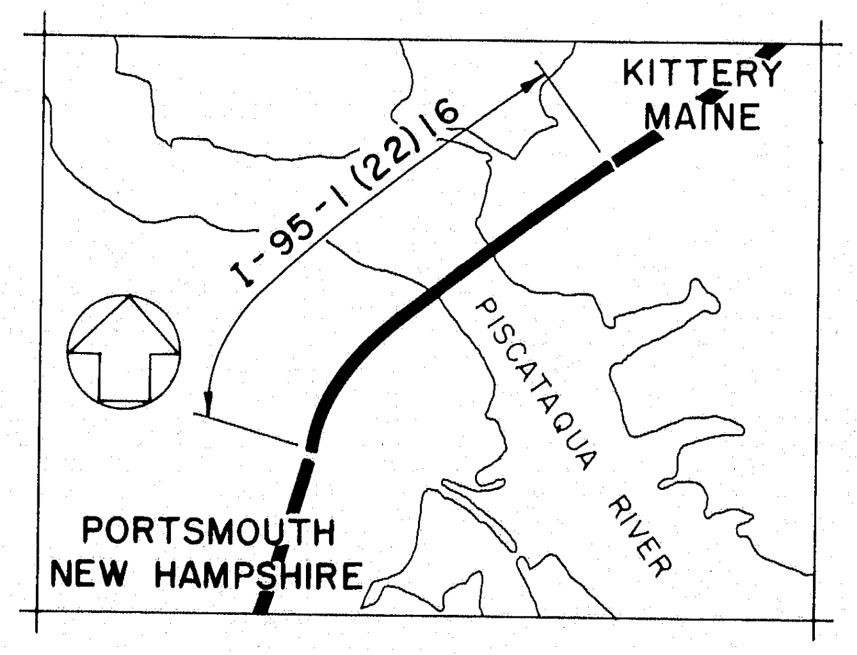
KITTERY
MAINE
I-95-1 (22) 16
PISCATAQUA RIVER
PORTSMOUTH
NEW HAMPSHIRE

LOCATION MAP

SCALE: 1"=2000'

APPROVED
NEW HAMPSHIRE DEPARTMENT OF
PUBLIC WORKS AND HIGHWAYS

R. H. Whitaker
COMMISSIONER

Reuel W. Webb
CHIEF ENGINEER

June 2, 1969
DATE

APPROVED
MAINE STATE HIGHWAY COMMISSION

David H. Stevens
CHAIRMAN

Steven D. Shaw

Bertrand A. Lachance

Sylvester L. Poor
CHIEF ENGINEER

JUNE 4, 1969
DATE

PREPARED BY

HARDESTY & HANOVER
CONSULTING ENGINEERS
NEW YORK, NEW YORK

John J. Fiala

JUNE 2, 1969
DATE

AS BUILT
2/5/73

DEPARTMENT OF TRANSPORTATION
FEDERAL HIGHWAY ADMINISTRATION
BUREAU OF PUBLIC ROADS
REGION I

APPROVED

DIVISION ENGINEER
DATE

129-97

B.P.R. REG. NO.	STATE	PROJECT NUMBER	SHEET NO.	TOTAL SHEETS
1	MAINE	I-95-1(22)16	2	54

ITEM NO.	DESCRIPTION	UNIT	NEW HAMPSHIRE APPROACH		RIVER BRIDGE		MAINE APPROACH		TOTAL	
			ESTIMATED	AS BUILT	ESTIMATED	AS BUILT	ESTIMATED	AS BUILT	ESTIMATED	AS BUILT
502.261 502.262 502.263	STRUCTURAL CONCRETE ROADWAY SLAB BRUSH CURBS & MEDIAN BARRIER ON STEEL BRIDGES	L.S.	1	/	1	/	1	/	1 1 1	/ / /
502.34	SET RETARDER	C.Y. CONC.	238	105	4,215	3,750	242	210	4,695	4,065
503.121	REINFORCING STEEL, FABRICATED & DELIVERED	LBS.	71,200	71,043	1,278,500	1,286,270	73,000	71,799	1,422,700	1,429,112
503.131	REINFORCING STEEL, PLACING	LBS.	71,200	71,043	1,278,500	1,286,270	73,000	71,799	1,422,700	1,429,112
504.702	STRUCTURAL STEEL, FABRICATED & DELIVERED	L.S.			1	/			1	/
504.711 504.712 504.713	STRUCTURAL STEEL, ERECTION	L.S.	1	/	1	/	1	/	1 1 1	/ / /
506.141 506.142 506.143	FIELD PAINTING, STRUCTURAL STEEL	L.S.	1	/	1	/	1	/	1 1 1	/ / /
507.081	BRIDGE RAILING	L.F.	156	160	2,699	2,693	159	161	3,014	3,014
516.06	WATER REPELLENT	GAL.	2	—	36	—	2	—	40	—
609.131	VERTICAL BRIDGE CURB, TYPE I	L.F.	149	150	2,685	2,670	152	151	2,986	2,971
609.132	VERTICAL BRIDGE CURB, SPECIAL	L.F.	149	150	2,685	2,675	152	151	2,986	2,976
639.07	TESTING FACILITIES, CONCRETE	L.S.			1				1	/
655.211 655.212 655.213	ELECTRICAL WORK	L.S.	1	/	1	/	1	/	1 1 1	/ / /

STRUCTURAL STEEL BREAKDOWN

	A36	A242 CORR. RESIST.	A588	A517	SPECIAL
TRUSSES	3,062,000		1,358,000	4,042,000	
BRACING	4,162,000				
FLOORBEAMS	155,000		2,656,000		
STRINGERS	2,916,000				
SHOES					554,000
EXPANSION JOINTS		508,000			20,000
MISC.	17,000	243,000			5,000
ITEM 504.702	10,312,000	751,000	4,014,000	4,042,000	579,000
TOTAL STRUCTURAL STEEL FABRICATED & DELIVERED	19,698,000 LBS. *				
ITEM 504.711	250,000				
ITEM 504.712	10,312,000	751,000	4,014,000	4,042,000	579,000
ITEM 504.713	254,000				
TOTAL STRUCTURAL STEEL ERECTION	20,202,000 LBS.				
ITEM 506.141	6,886,000				
ITEM 506.142	19,698,000				
ITEM 506.143	4,560,000				
TOTAL FIELD PAINTING STRUCTURAL STEEL	31,144,000				

* Approximate As-Built Total - 21,474,759 Lbs.

STRUCTURAL CONCRETE BREAKDOWN

	ROADWAY SLAB	BRUSH CURBS	MEDIAN BARRIER
ITEM 502.261	219	7	12
ITEM 502.262	3,910	104	201
ITEM 502.263	223	7	12
TOTAL	4,695 C.Y.		

AS BUILT
R.W. Christie 2/5/73

5

DESIGN — S. Nishimura
TRACE —
CHECK —

BRIDGE NO.
IN CHARGE OF — Richard W. Christie

NEW HAMPSHIRE
DEPARTMENT OF PUBLIC WORKS AND HIGHWAYS
AND
MAINE STATE HIGHWAY COMMISSION
INTERSTATE 95 BRIDGE
OVER
PISCATAQUA RIVER
BETWEEN
PORTSMOUTH, NEW HAMPSHIRE AND KITTERY, MAINE

HARDESTY & HANOVER
CONSULTING ENGINEERS
NEW YORK, N. Y.

QUANTITY SUMMARY

SHEET 2 OF 54

129-98

B. P. R. REG. NO.	STATE	PROJECT NUMBER	SHEET NO.	TOTAL SHEETS
1	MAINE	I—95—1(22) 16	3	54

SPECIFICATIONS

THE FOLLOWING SPECIFICATIONS GOVERN THE DESIGN AND CONSTRUCTION OF THIS PROJECT:

DESIGN
  AMERICAN ASSOCIATION OF STATE HIGHWAY OFFICIALS, NINTH EDITION, 1965
  STANDARD SPECIFICATIONS FOR HIGHWAY BRIDGES

  AMERICAN WELDING SOCIETY
  SPECIFICATIONS FOR WELDED HIGHWAY AND RAILWAY BRIDGES
    AWS D2.0-66 AND SUPPLEMENTS

CONSTRUCTION
  STATE OF MAINE, STATE HIGHWAY COMMISSION
    STANDARD SPECIFICATIONS - HIGHWAYS AND BRIDGES
      REVISION OF JUNE 1968
    SUPPLEMENTAL SPECIFICATIONS
    SPECIAL PROVISIONS FOR THE PROJECT

DESIGN CRITERIA

DESIGN SPEED = 70 MPH
MINIMUM STOPPING SIGHT DISTANCE = 600 FEET
VERTICAL NAVIGATION CLEARANCE ABOVE MEAN HIGH WATER 135'-0"
LIVE LOAD

CASE I	AASHO HS-2044 WITH ALLOWABLE UNIT STRESSES DETERMINED BY THE CRITERIA FOR FATIGUE
CASE II	AASHO HS-20-44 INCREASED BY 100% WITH ALLOWABLE UNIT STRESSES OF 150% OF BASIC STRESSES
CASE III	MILITARY TANDEM AXLE LOAD OF TWO 24,000 POUND AXLES SPACED 4'-0" APART WITH ALLOWABLE UNIT STRESSES EQUAL TO BASIC STRESSES

WIND LOAD
  TRUSS SPANS 75 POUNDS PER SQUARE FOOT ON THE PROJECTED AREA OF THE WINDWARD FACE OF THE STRUCTURE PLUS 25 POUNDS PER SQUARE FOOT ON THE EXPOSED AREA OF THE LEE TRUSS

DIMENSIONS

ALL DIMENSIONS SHOWN IN PLAN VIEWS ARE HORIZONTAL AND AT A TEMPERATURE OF 45°.

DESIGN STRESSES

BASIC STRESSES ARE AS FOLLOWS:
STRUCTURAL STEEL

TENSION	A36	20,000 PSI
	A588	27,000 PSI
	A517	45,000 PSI
COMPRESSION (BEAMS)	A36	$20{,}000 - 7.5 (L/B)^2$ PSI
	A588	$27{,}000 - 14.4 (L/B)^2$ PSI
COMPRESSION (COLUMNS WITH RIVETED ENDS)	A36	$16{,}000 - 0.3 (L/R)^2$ PSI
	A588	$22{,}000 - 0.56 (L/R)^2$ PSI
	A517	$36{,}000 - 1.77 (L/R)^2$ PSI
SHEAR (WEBS)	A36	12,000 PSI
	A588	17,000 PSI

CONCRETE
  F_C = 1,200 PSI

REINFORCING STEEL
  GRADE 40 F_S = 20,000 PSI

BOLTS (FRICTION TYPE, SINGLE SHEAR)

1 1/8"	13,400	POUNDS PER BOLT
1"	10,600	POUNDS PER BOLT
7/8"	8,100	POUNDS PER BOLT
3/4"	6,000	POUNDS PER BOLT

STRUCTURAL STEEL

1. METAL IN THE SUPERSTRUCTURE SHALL CONFORM TO THE FOLLOWING ASTM SPECIFICATIONS:

MAIN TRUSSES	A36 A588* A517*
LATERAL AND SWAY BRACING	A36
FLOORBEAMS	A588*
STRINGERS	A36
MISCELLANEOUS METAL	AS DETAILED ON PLANS
SHOES	AS DETAILED ON PLANS
BOLTS	A325
EXPANSION JOINTS	A242 (CORROSION RESISTANT)

* A588 AND A517 STEEL TO HAVE MINIMUM CHARPY V-NOTCH IMPACT VALUE OF 15 FT.-LBS. AT 40°F.

2. TYPE OF FABRICATION

STRUCTURAL STEEL SHALL, IN GENERAL, BE SHOP WELDED AND SHOP AND FIELD BOLTED USING HIGH STRENGTH BOLTS.

LATERAL BRACING AND SWAY FRAME MEMBERS SHALL BE SEALED AT THE ENDS BY AIR-TIGHT DIAPHRAGMS.

TRUSS MEMBERS SHALL BE WITHOUT BUTT SPLICES EXCEPT U7 L7, WHICH MAY HAVE ONE BUTT SPLICE.

U.M. PLATES WILL NOT BE PERMITTED IN THE BOX MEMBERS OR FLOORBEAM FLANGES.

3. BOLTS

BOLTED CONNECTIONS ARE FRICTION-TYPE.

BOLT SIZES

MAIN TRUSS CONNECTIONS (1 1/8" DIAMETER MAY BE USED AT THE OPTION OF THE CONTRACTOR. THE RESULTING REVISED JOINT DETAILS WILL BE REVIEWED BY THE ENGINEER DURING THE SHOP DRAWING PHASE.	1" DIAMETER
FLOOR SYSTEM CONNECTIONS	7/8" DIAMETER
TRUSS BRACING CONNECTIONS	7/8" DIAMETER
MISCELLANEOUS ACCESS PLATFORMS	3/4" OR 7/8" DIAMETER

MINIMUM SPACING, CENTER TO CENTER

1" DIAMETER	3 1/2"
7/8" DIAMETER	3"
3/4" DIAMETER	2 1/2"

4. CAMBER

THE RIVER BRIDGE TRUSS HAS BEEN DESIGNED FOR A DEAD LOAD END REACTION OF 400 KIPS PER TRUSS, NOT INCLUDING DEAD LOAD FROM THE ADJACENT APPROACH STRINGERS. THE RIVER BRIDGE SHALL BE CAMBERED SO THAT IT WILL HAVE ITS TRUE GEOMETRIC SHAPE UNDER FULL DEAD LOAD WITH THIS REACTION.

FLOORBEAMS IN THE TRUSS SPANS SHALL BE CAMBERED FOR FULL DEAD LOAD.

CAMBER FOR TRUSS STRINGERS SHALL BE PROVIDED BY PLACING THEM WITH THEIR NATURAL CAMBER UPWARD.

5. PAINTING

STRUCTURAL STEEL FURNISHED UNDER THIS CONTRACT SHALL BE GIVEN ONE COAT OF SHOP PAINT EXCEPT WHERE NOTED BELOW.

STRUCTURAL STEEL ERECTED UNDER THIS CONTRACT PLUS STRUCTURAL STEEL IN THE APPROACH SPANS PREVIOUSLY ERECTED BY OTHERS SHALL BE GIVEN THREE FIELD COATS OF PAINT EXCEPT WHERE NOTED BELOW.

STRUCTURAL STEEL ADJACENT TO EXPANSION JOINTS AND BELOW DECK LEVEL SHALL BE GIVEN ONE SHOP COAT OF ZINC-RICH EPOXY PAINT.

STRUCTURAL STEEL ERECTED UNDER THIS CONTRACT PLUS STRUCTURAL STEEL IN THE APPROACH SPANS PREVIOUSLY ERECTED BY OTHERS AND WHICH HAS RECEIVED A ZINC-RICH EPOXY COATING SHALL RECEIVE THREE ADDITIONAL FIELD COATS OF EPOXY PAINT.

CONCRETE

STRUCTURAL CONCRETE FOR THE WORK SHALL BE AS FOLLOWS:

USE	CLASS	CEMENT CONTENT SACKS/CU. YD.	AGGREGATE
DECK SLABS	AA	7.0	CRUSHED STONE

ALL CONCRETE SHALL BE AIR-ENTRAINED AND HAVE AN EXPECTED 28 DAY COMPRESSIVE STRENGTH OF 3500 P.S.I.

REINFORCING STEEL

REINFORCING STEEL SHALL CONFORM TO THE FOLLOWING ASTM SPECIFICATION:

A615, GRADE 40	DEFORMED BILLET-STEEL BARS FOR CONCRETE REINFORCEMENT

BAR LISTS ARE SET UP SO THAT EACH PART OF THE STRUCTURE IN THE CONTRACT HAS ITS OWN COMBINATION OF LETTERS AND NUMBERS.

BAR SIZES ARE IDENTIFIED BY THE FIRST TWO DIGITS OF A FOUR DIGIT BAR MARK OR THE FIRST DIGIT OF A THREE DIGIT BAR MARK.

THE LAST TWO DIGITS IN CONJUNCTION WITH THE LETTER PREFIX INDICATES THE BAR NUMBER WITHIN A GIVEN BAR SIZE GROUP AND THE STRUCTURE IN WHICH IT BELONGS. LETTER PREFIXES DESIGNATE THE EXACT STRUCTURE IN WHICH THE BAR BELONGS.

ALL DIMENSIONS IN THE BAR LISTS ARE OUT TO OUT DIMENSIONS.

REINFORCING STEEL SPLICES

REINFORCING BAR SIZES 2 THROUGH 11 SHALL BE SPLICED BY LAPPING AT LEAST 30 DIAMETERS.

REINFORCING BAR SPLICES IN ADDITION TO THOSE SHOWN ON THE PLANS MAY BE USED IF APPROVED BY THE ENGINEER.

REINFORCING BAR SPLICES SHOWN ON THE PLANS MAY BE OMITTED AND LONGER BARS USED IF APPROVED BY THE ENGINEER.

AS BUILT
R.W. Christie 2/5/73

5

DESIGN —
TRACE —
CHECK — S. Nishimura

BRIDGE NO.
IN CHARGE OF — Richard W. Christie

NEW HAMPSHIRE
DEPARTMENT OF PUBLIC WORKS AND HIGHWAYS
AND
MAINE STATE HIGHWAY COMMISSION
INTERSTATE 95 BRIDGE
OVER
PISCATAQUA RIVER
BETWEEN
PORTSMOUTH, NEW HAMPSHIRE AND KITTERY, MAINE

HARDESTY & HANOVER
CONSULTING ENGINEERS
NEW YORK, N. Y.

GENERAL NOTES

SHEET 3 OF 54

129-98

B. P. R. REG. NO.	STATE	PROJECT NUMBER	SHEET NO.	TOTAL SHEETS
1	MAINE	I-95-1(22) 16	3	54

SPECIFICATIONS

THE FOLLOWING SPECIFICATIONS GOVERN THE DESIGN AND CONSTRUCTION OF THIS PROJECT:

DESIGN
    AMERICAN ASSOCIATION OF STATE HIGHWAY OFFICIALS, NINTH EDITION, 1965
    STANDARD SPECIFICATIONS FOR HIGHWAY BRIDGES

    AMERICAN WELDING SOCIETY
    SPECIFICATIONS FOR WELDED HIGHWAY AND RAILWAY BRIDGES
        AWS D2.0-66 AND SUPPLEMENTS

CONSTRUCTION
    STATE OF MAINE, STATE HIGHWAY COMMISSION
        STANDARD SPECIFICATIONS - HIGHWAYS AND BRIDGES
            REVISION OF JUNE 1968
        SUPPLEMENTAL SPECIFICATIONS
        SPECIAL PROVISIONS FOR THE PROJECT

DESIGN CRITERIA

DESIGN SPEED = 70 MPH
MINIMUM STOPPING SIGHT DISTANCE = 600 FEET
VERTICAL NAVIGATION CLEARANCE ABOVE MEAN HIGH WATER 135'-0"
LIVE LOAD

CASE I	AASHO HS-2044 WITH ALLOWABLE UNIT STRESSES DETERMINED BY THE CRITERIA FOR FATIGUE
CASE II	AASHO HS-20-44 INCREASED BY 100% WITH ALLOWABLE UNIT STRESSES OF 150% OF BASIC STRESSES
CASE III	MILITARY TANDEM AXLE LOAD OF TWO 24,000 POUND AXLES SPACED 4'-0" APART WITH ALLOWABLE UNIT STRESSES EQUAL TO BASIC STRESSES

WIND LOAD
    TRUSS SPANS 75 POUNDS PER SQUARE FOOT ON THE PROJECTED AREA OF THE WINDWARD FACE OF THE STRUCTURE PLUS 25 POUNDS PER SQUARE FOOT ON THE EXPOSED AREA OF THE LEE TRUSS

DIMENSIONS

ALL DIMENSIONS SHOWN IN PLAN VIEWS ARE HORIZONTAL AND AT A TEMPERATURE OF 45°.

DESIGN STRESSES

BASIC STRESSES ARE AS FOLLOWS:
STRUCTURAL STEEL

TENSION	A36	20,000 PSI
	A588	27,000 PSI
	A517	45,000 PSI
COMPRESSION (BEAMS)	A36	$20{,}000 - 7.5\,(L/B)^2$ PSI
	A588	$27{,}000 - 14.4\,(L/B)^2$ PSI
COMPRESSION (COLUMNS WITH RIVETED ENDS)	A36	$16{,}000 - 0.3\,(L/R)^2$ PSI
	A588	$22{,}000 - 0.56\,(L/R)^2$ PSI
	A517	$36{,}000 - 1.77\,(L/R)^2$ PSI
SHEAR (WEBS)	A36	12,000 PSI
	A588	17,000 PSI

CONCRETE
    F_C = 1,200 PSI

REINFORCING STEEL
    GRADE 40 F_S = 20,000 PSI

BOLTS (FRICTION TYPE, SINGLE SHEAR)

1 1/8"	13,400 POUNDS PER BOLT
1"	10,600 POUNDS PER BOLT
7/8"	8,100 POUNDS PER BOLT
3/4"	6,000 POUNDS PER BOLT

STRUCTURAL STEEL

1. METAL IN THE SUPERSTRUCTURE SHALL CONFORM TO THE FOLLOWING ASTM SPECIFICATIONS:

MAIN TRUSSES	A36 A588* A517*
LATERAL AND SWAY BRACING	A36
FLOORBEAMS	A588*
STRINGERS	A36
MISCELLANEOUS METAL	AS DETAILED ON PLANS
SHOES	AS DETAILED ON PLANS
BOLTS	A325
EXPANSION JOINTS	A242 (CORROSION RESISTANT)

* A588 AND A517 STEEL TO HAVE MINIMUM CHARPY V-NOTCH IMPACT VALUE OF 15 FT.-LBS. AT 40°F.

2. TYPE OF FABRICATION

STRUCTURAL STEEL SHALL, IN GENERAL, BE SHOP WELDED AND SHOP AND FIELD BOLTED USING HIGH STRENGTH BOLTS.

LATERAL BRACING AND SWAY FRAME MEMBERS SHALL BE SEALED AT THE ENDS BY AIR-TIGHT DIAPHRAGMS.

TRUSS MEMBERS SHALL BE WITHOUT BUTT SPLICES EXCEPT U7 L7, WHICH MAY HAVE ONE BUTT SPLICE.

U.M. PLATES WILL NOT BE PERMITTED IN THE BOX MEMBERS OR FLOORBEAM FLANGES.

3. BOLTS

BOLTED CONNECTIONS ARE FRICTION-TYPE.

BOLT SIZES

MAIN TRUSS CONNECTIONS (1 1/8" DIAMETER MAY BE USED AT THE OPTION OF THE CONTRACTOR. THE RESULTING REVISED JOINT DETAILS WILL BE REVIEWED BY THE ENGINEER DURING THE SHOP DRAWING PHASE.	1" DIAMETER
FLOOR SYSTEM CONNECTIONS	7/8" DIAMETER
TRUSS BRACING CONNECTIONS	7/8" DIAMETER
MISCELLANEOUS ACCESS PLATFORMS	3/4" OR 7/8" DIAMETER

MINIMUM SPACING, CENTER TO CENTER

1" DIAMETER	3 1/2"
7/8" DIAMETER	3"
3/4" DIAMETER	2 1/2"

4. CAMBER

THE RIVER BRIDGE TRUSS HAS BEEN DESIGNED FOR A DEAD LOAD END REACTION OF 400 KIPS PER TRUSS, NOT INCLUDING DEAD LOAD FROM THE ADJACENT APPROACH STRINGERS. THE RIVER BRIDGE SHALL BE CAMBERED SO THAT IT WILL HAVE ITS TRUE GEOMETRIC SHAPE UNDER FULL DEAD LOAD WITH THIS REACTION.

FLOORBEAMS IN THE TRUSS SPANS SHALL BE CAMBERED FOR FULL DEAD LOAD.

CAMBER FOR TRUSS STRINGERS SHALL BE PROVIDED BY PLACING THEM WITH THEIR NATURAL CAMBER UPWARD.

5. PAINTING

STRUCTURAL STEEL FURNISHED UNDER THIS CONTRACT SHALL BE GIVEN ONE COAT OF SHOP PAINT EXCEPT WHERE NOTED BELOW.

STRUCTURAL STEEL ERECTED UNDER THIS CONTRACT PLUS STRUCTURAL STEEL IN THE APPROACH SPANS PREVIOUSLY ERECTED BY OTHERS SHALL BE GIVEN THREE FIELD COATS OF PAINT EXCEPT WHERE NOTED BELOW.

STRUCTURAL STEEL ADJACENT TO EXPANSION JOINTS AND BELOW DECK LEVEL SHALL BE GIVEN ONE SHOP COAT OF ZINC-RICH EPOXY PAINT.

STRUCTURAL STEEL ERECTED UNDER THIS CONTRACT PLUS STRUCTURAL STEEL IN THE APPROACH SPANS PREVIOUSLY ERECTED BY OTHERS AND WHICH HAS RECEIVED A ZINC-RICH EPOXY COATING SHALL RECEIVE THREE ADDITIONAL FIELD COATS OF EPOXY PAINT.

CONCRETE

STRUCTURAL CONCRETE FOR THE WORK SHALL BE AS FOLLOWS:

USE	CLASS	CEMENT CONTENT SACKS/CU. YD.	AGGREGATE
DECK SLABS	AA	7.0	CRUSHED STONE

ALL CONCRETE SHALL BE AIR-ENTRAINED AND HAVE AN EXPECTED 28 DAY COMPRESSIVE STRENGTH OF 3500 P.S.I.

REINFORCING STEEL

REINFORCING STEEL SHALL CONFORM TO THE FOLLOWING ASTM SPECIFICATION:

A615, GRADE 40	DEFORMED BILLET-STEEL BARS FOR CONCRETE REINFORCEMENT

BAR LISTS ARE SET UP SO THAT EACH PART OF THE STRUCTURE IN THE CONTRACT HAS ITS OWN COMBINATION OF LETTERS AND NUMBERS.

BAR SIZES ARE IDENTIFIED BY THE FIRST TWO DIGITS OF A FOUR DIGIT BAR MARK OR THE FIRST DIGIT OF A THREE DIGIT BAR MARK.

THE LAST TWO DIGITS IN CONJUNCTION WITH THE LETTER PREFIX INDICATES THE BAR NUMBER WITHIN A GIVEN BAR SIZE GROUP AND THE STRUCTURE IN WHICH IT BELONGS. LETTER PREFIXES DESIGNATE THE EXACT STRUCTURE IN WHICH THE BAR BELONGS.

ALL DIMENSIONS IN THE BAR LISTS ARE OUT TO OUT DIMENSIONS.

REINFORCING STEEL SPLICES

REINFORCING BAR SIZES 2 THROUGH 11 SHALL BE SPLICED BY LAPPING AT LEAST 30 DIAMETERS.

REINFORCING BAR SPLICES IN ADDITION TO THOSE SHOWN ON THE PLANS MAY BE USED IF APPROVED BY THE ENGINEER.

REINFORCING BAR SPLICES SHOWN ON THE PLANS MAY BE OMITTED AND LONGER BARS USED IF APPROVED BY THE ENGINEER.

AS BUILT
R.W. Christie 2/5/73

5

DESIGN –
TRACE –
CHECK – S. Nishimura

BRIDGE NO.
IN CHARGE OF – Richard W. Christie

NEW HAMPSHIRE
DEPARTMENT OF PUBLIC WORKS AND HIGHWAYS
AND
MAINE STATE HIGHWAY COMMISSION
INTERSTATE 95 BRIDGE
OVER
PISCATAQUA RIVER
BETWEEN
PORTSMOUTH, NEW HAMPSHIRE AND KITTERY, MAINE

HARDESTY & HANOVER
CONSULTING ENGINEERS
NEW YORK, N. Y.

GENERAL NOTES

SHEET 3 OF 54

129-98

B. P. R. REG. NO.	STATE	PROJECT NUMBER	SHEET NO.	TOTAL SHEETS
1	MAINE	I-95-1 (22) 16	4	54

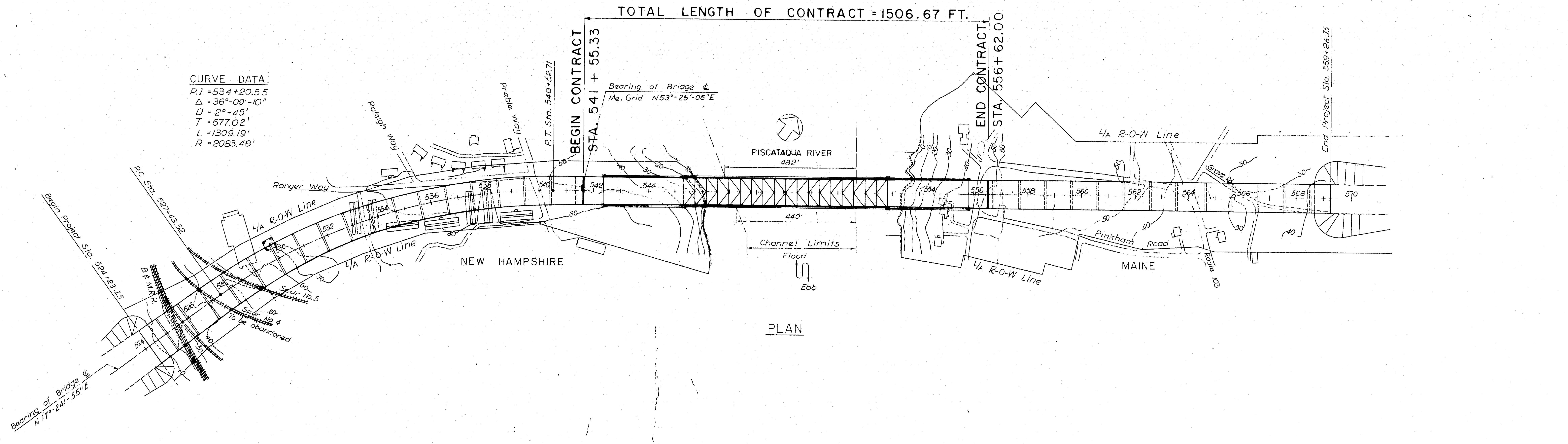
TOTAL LENGTH OF CONTRACT = 1506.67 FT.
BEGIN CONTRACT
STA. 541 + 55.33
END CONTRACT
STA. 556 + 62.00
CURVE DATA:
P.I. = 534+20.55
Δ = 36°-00'-10"
D = 2°-45'
T = 677.02'
L = 1309.19'
R = 2083.48'
Bearing of Bridge ℄
Me. Grid N53°-25'-05"E
P.T. Sta. 540+52.71
Preble Way
Raleigh Way
Ranger Way
P.C. Sta. 527+43.52
Begin Project Sta. 524+23.25
B.& M.R.R.
L/A R-O-W Line
Spur No. 5
Spur No. 4
To be abandoned
Bearing of Bridge ℄
N 17°-24'-55"E
NEW HAMPSHIRE
PISCATAQUA RIVER
482'
440'
Channel Limits
Flood
Ebb
MAINE
Pinkham Road
Route 103
Grove Rd.
End Project Sta. 569+26.75
524
526
528
530
532
534
536
538
540
542
544
554
556
558
560
562
564
566
568
570

PLAN

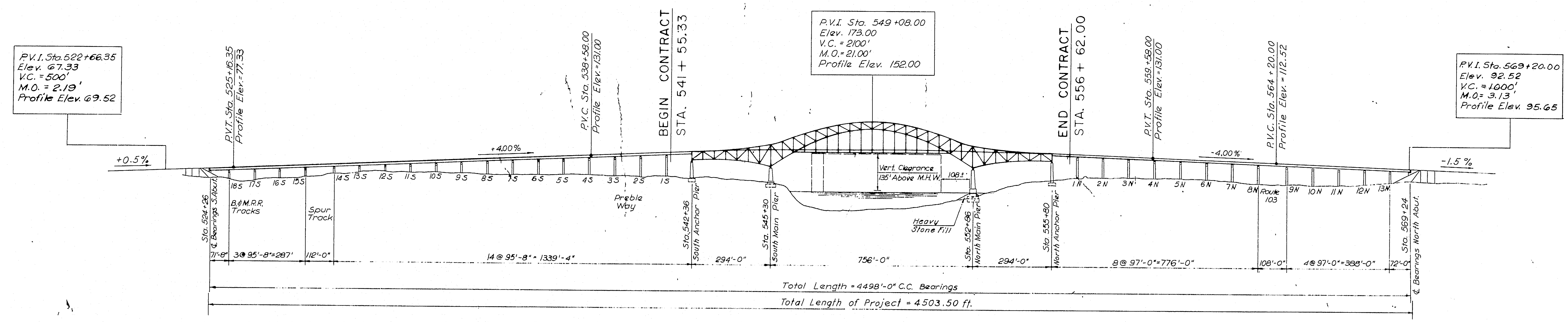
P.V.I. Sta. 522+66.35
Elev. 67.33
V.C. = 500'
M.O. = 2.19'
Profile Elev. 69.52
P.V.T. Sta. 525+16.35
Profile Elev. = 77.33
P.V.C. Sta. 538+58.00
Profile Elev. = 131.00
BEGIN CONTRACT
STA. 541 + 55.33
P.V.I. Sta. 549+08.00
Elev. 173.00
V.C. = 2100'
M.O. = 21.00'
Profile Elev. 152.00
END CONTRACT
STA. 556 + 62.00
P.V.T. Sta. 559+58.00
Profile Elev. = 131.00
P.V.C. Sta. 564+20.00
Profile Elev. = 112.52
P.V.I. Sta. 569+20.00
Elev. 92.52
V.C. = 1000'
M.O. = 3.13'
Profile Elev. 95.65
+0.5%
+4.00%
-4.00%
-1.5%
18S 17S 16S 15S 14S 13S 12S 11S 10S 9S 8S 7S 6S 5S 4S 3S 2S 1S
1N 2N 3N 4N 5N 6N 7N 8N 9N 10N 11N 12N 13N
Sta. 524+26 ℄ Bearings S. Abut.
B.&M.R.R. Tracks
Spur Track
Preble Way
Sta. 542+36 South Anchor Pier
Sta. 545+30 South Main Pier
Vert. Clearance 135' Above M.H.W.
108±'
Heavy Stone Fill
Sta. 552+86 North Main Pier
Sta. 555+80 North Anchor Pier
Route 103
Sta. 569+24 ℄ Bearings North Abut.
71'-8"
3@ 95'-8" = 287'
112'-0"
14 @ 95'-8" = 1339'-4"
294'-0"
756'-0"
294'-0"
8 @ 97'-0" = 776'-0"
108'-0"
4 @ 97'-0" = 388'-0"
72'-0"
Total Length = 4498'-0" C.C. Bearings
Total Length of Project = 4503.50 ft.

ELEVATION

Scale Hor. & Vert. 1" = 200'

AS BUILT
R.W. Christie 2/5/73

5

DESIGN —
TRACE — S. Bradford
CHECK — R.W. Christie

BRIDGE NO.
IN CHARGE OF — R.W. Christie

NEW HAMPSHIRE
DEPARTMENT OF PUBLIC WORKS AND HIGHWAYS
AND
MAINE STATE HIGHWAY COMMISSION
INTERSTATE 95 BRIDGE
OVER
PISCATAQUA RIVER
BETWEEN
PORTSMOUTH, NEW HAMPSHIRE AND KITTERY, MAINE

HARDESTY & HANOVER
CONSULTING ENGINEERS
NEW YORK, N. Y.

PROJECT
PLAN AND ELEVATION

SHEET 4 OF 54

129-99

B. P. R. REG. NO.	STATE	PROJECT NUMBER	SHEET NO.	TOTAL SHEETS
1	MAINE	I-95-I(22)16	5	54

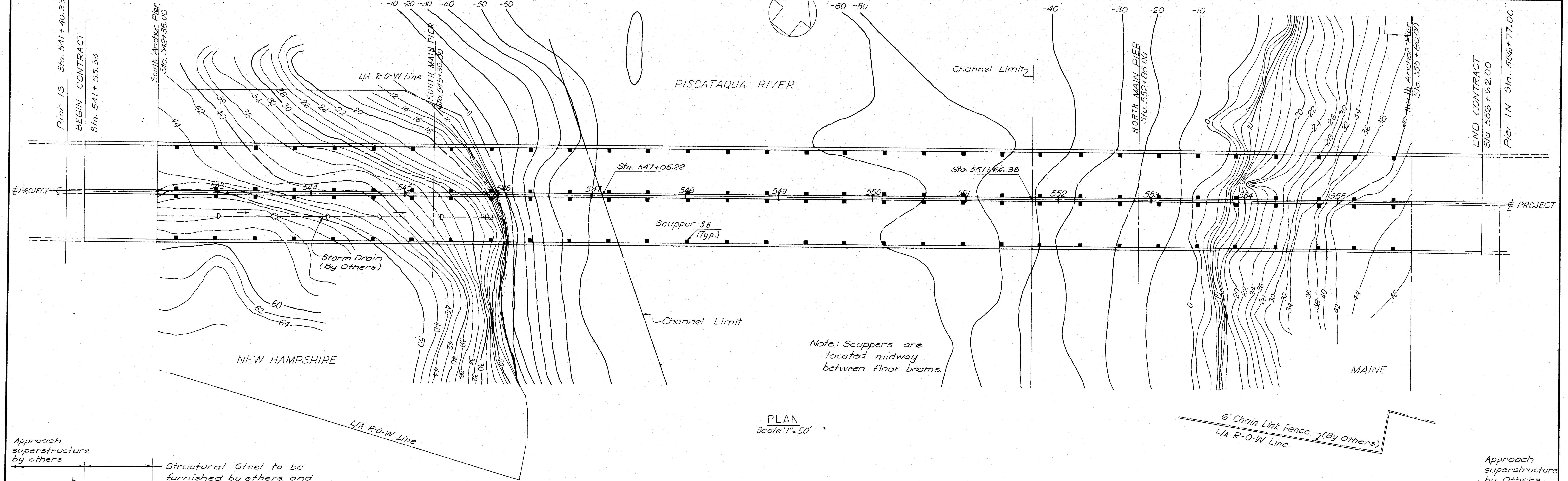

Pier 15 Sta. 541+40.33
BEGIN CONTRACT Sta. 541+55.33
South Anchor Pier Sta. 542+36.00
L/A R-O-W Line
SOUTH MAIN PIER Sta. 545+30.00
-10 -20 -30 -40 -50 -60
PISCATAQUA RIVER
-60 -50
Channel Limit
-40 -30 -20 -10
NORTH MAIN PIER Sta. 552+85.00
North Anchor Pier Sta. 555+80.00
END CONTRACT Sta. 556+62.00
Pier 1N Sta. 556+77.00
℄ PROJECT
543 544 545 546 547 548 549 550 551 552 553 554 555
Sta. 547+05.22
Sta. 551+66.38
Scupper S6 (Typ.)
Storm Drain (By Others)
60 62 64
Channel Limit
NEW HAMPSHIRE
MAINE
L/A R-O-W Line
6' Chain Link Fence (By Others)
L/A R-O-W Line

PLAN
Scale: 1" = 50'

Note: Scuppers are located midway between floor beams.

Approach superstructure by others

Structural Steel to be furnished by others, and erected under this Contract.

Approach superstructure by Others

Structural Steel to be furnished by others, and erected under this Contract.

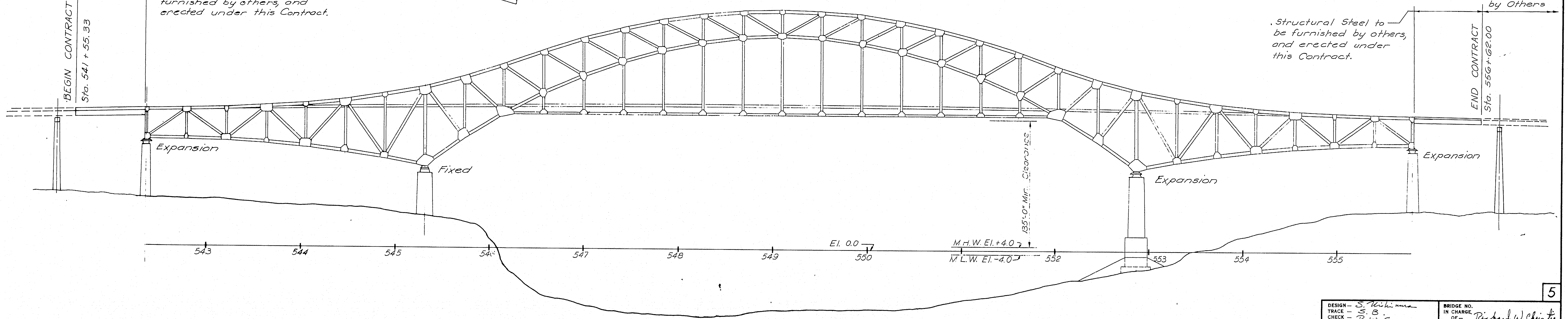

BEGIN CONTRACT Sta. 541+55.33
END CONTRACT Sta. 556+62.00
Expansion
Fixed
Expansion
Expansion
135'-0" Min. Clearance
El. 0.0
M.H.W. El. +4.0
M.L.W. El. -4.0
543 544 545 546 547 548 549 550 552 553 554 555

ELEVATION
Scale: 1" = 50'

AS BUILT
R. W. Christie 2/5/73

5

DESIGN – S. Nishimura
TRACE – S. B.
CHECK – R. W. C.

BRIDGE NO.
IN CHARGE OF – Richard W. Christie

NEW HAMPSHIRE
DEPARTMENT OF PUBLIC WORKS AND HIGHWAYS
AND
MAINE STATE HIGHWAY COMMISSION
INTERSTATE 95 BRIDGE
OVER
PISCATAQUA RIVER
BETWEEN
PORTSMOUTH, NEW HAMPSHIRE AND KITTERY, MAINE

GENERAL PLAN & ELEVATION
STA. 542+36 - STA. 555+80

SHEET 5 OF 54

HARDESTY & HANOVER
CONSULTING ENGINEERS
NEW YORK, N. Y.

129-100

B. P. R. REG. NO.	STATE	PROJECT NUMBER	SHEET NO.	TOTAL SHEETS
1	MAINE	I-95-1(22)16	6	54

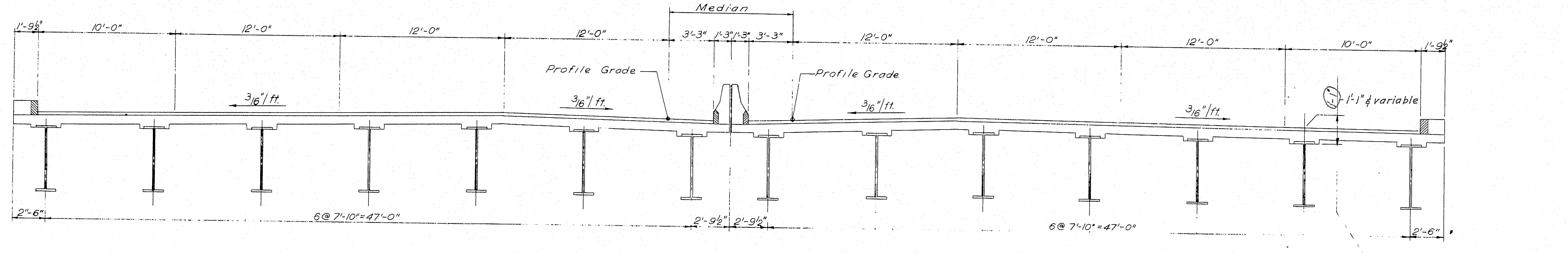
Median
1'-9½"
10'-0"
12'-0"
12'-0"
12'-0"
3'-3"
1'-3"
1'-3"
3'-3"
12'-0"
12'-0"
12'-0"
10'-0"
1'-9½"
Profile Grade
Profile Grade
3/16"/ft.
3/16"/ft.
3/16"/ft.
3/16"/ft.
1'-1" ± variable
2'-6"
6 @ 7'-10" = 47'-0"
2'-9½"
2'-9½"
6 @ 7'-10" = 47'-0"
2'-6"
Top of stringer web to top of wearing surface

APPROACH SPANS - NORMAL SECTION

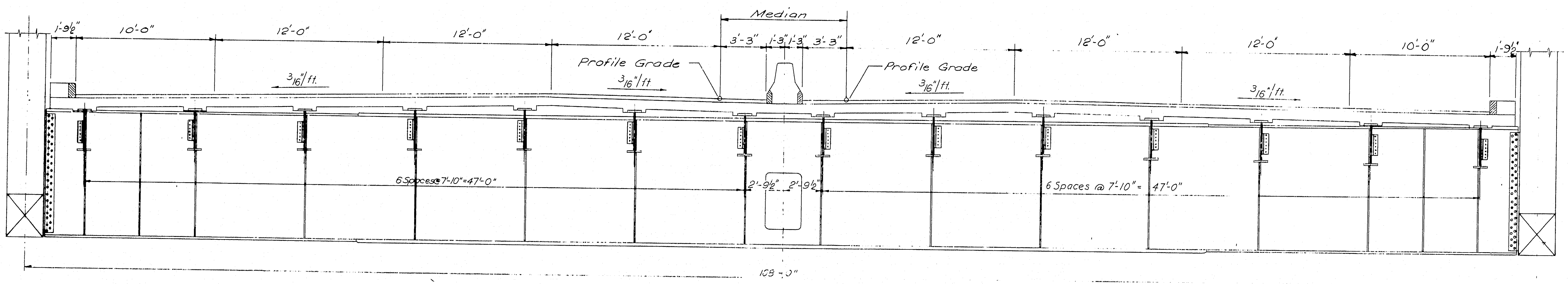
Median
1'-9½"
10'-0"
12'-0"
12'-0"
12'-0"
3'-3"
1'-3"
1'-3"
3'-3"
12'-0"
12'-0"
12'-0"
10'-0"
1'-9½"
Profile Grade
Profile Grade
3/16"/ft.
3/16"/ft.
3/16"/ft.
3/16"/ft.
6 Spaces @ 7'-10" = 47'-0"
2'-9½"
2'-9½"
6 Spaces @ 7'-10" = 47'-0"
108'-0"

TRUSS SPANS
Scale: ¼" = 1'-0"

AS BUILT
R.W. Christie 2/5/73

HARDESTY & HANOVER
CONSULTING ENGINEERS
NEW YORK, N.Y.

5

DESIGN – S. Nishimura
TRACE – C.J.
CHECK – R.W.C.

BRIDGE NO.
IN CHARGE OF – Richard W. Christie

NEW HAMPSHIRE
DEPARTMENT OF PUBLIC WORKS AND HIGHWAYS
AND
MAINE STATE HIGHWAY COMMISSION
INTERSTATE 95 BRIDGE
OVER
PISCATAQUA RIVER
BETWEEN
PORTSMOUTH, NEW HAMPSHIRE AND KITTERY, MAINE

TYPICAL SECTIONS

SHEET 6 OF 54

129-101

B. P. R. REG. NO.	STATE	PROJECT NUMBER	SHEET NO.	TOTAL SHEETS
1	MAINE	I-95-1(22)16	7	54

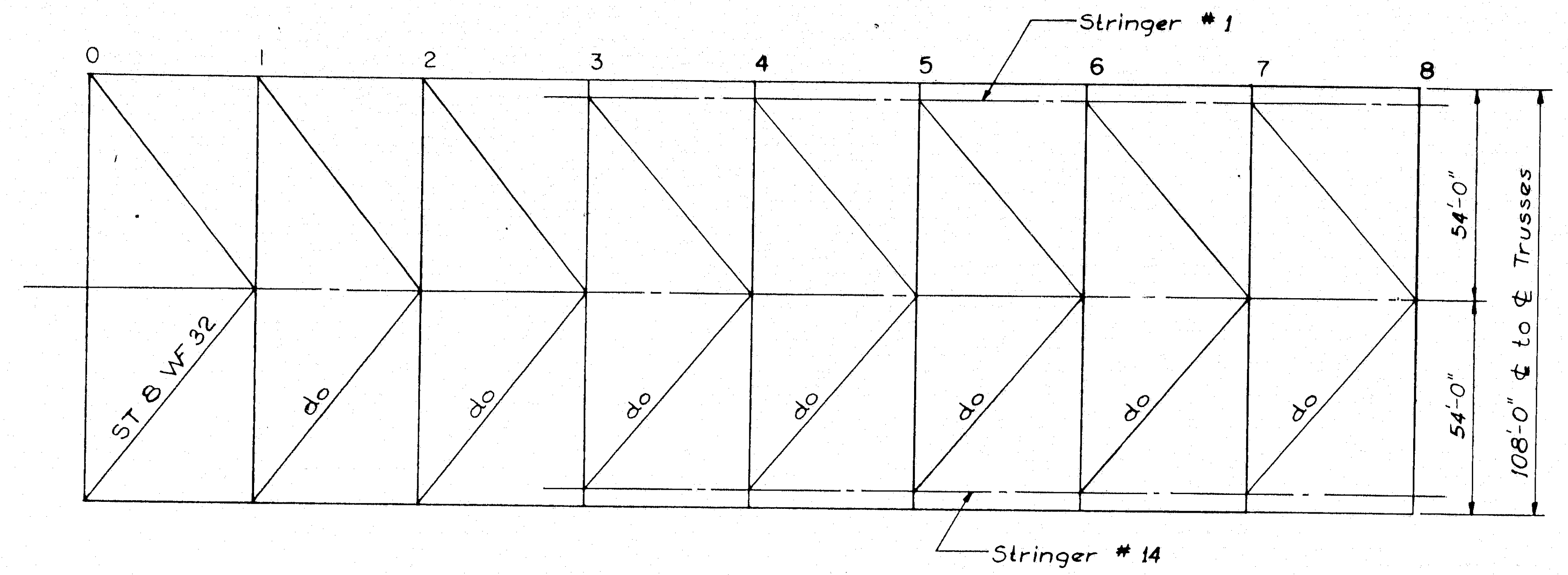

Stringer # 1
0
1
2
3
4
5
6
7
8
ST 6 WF 32
do
54'-0"
54'-0"
108'-0" ℄ to ℄ Trusses
Stringer # 14

FLOOR LATERALS

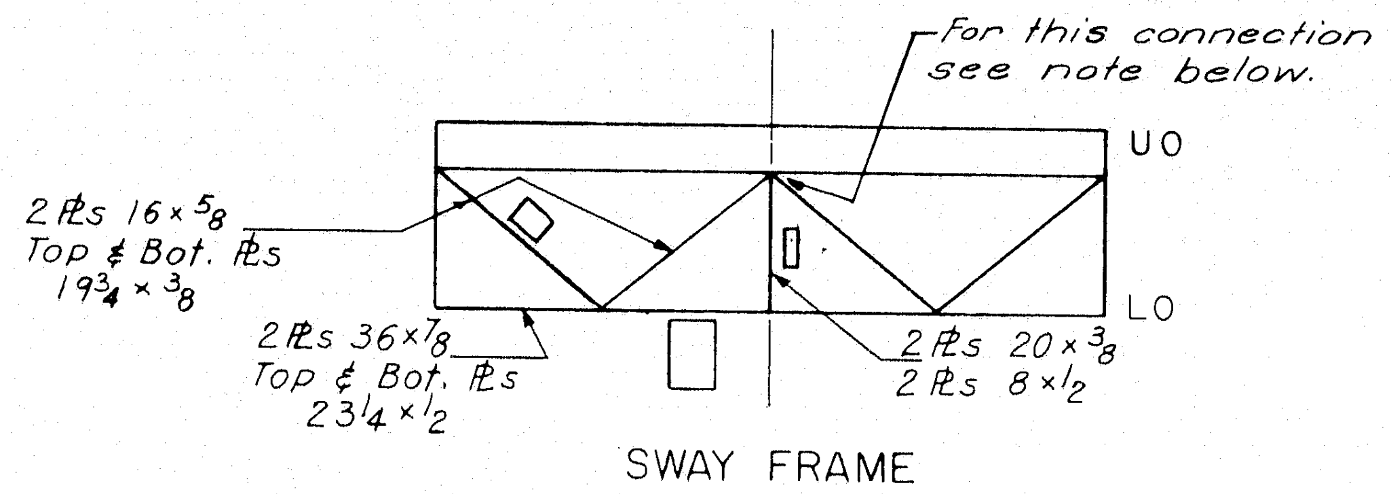

For this connection see note below.
U0
L0
2 ℔s 16×5/8 Top & Bot. ℔s 19 3/4×3/8
2 ℔s 36×7/8 Top & Bot. ℔s 23 1/4×1/2
2 ℔s 20×3/8
2 ℔s 8×1/2

SWAY FRAME
PANEL POINT 0

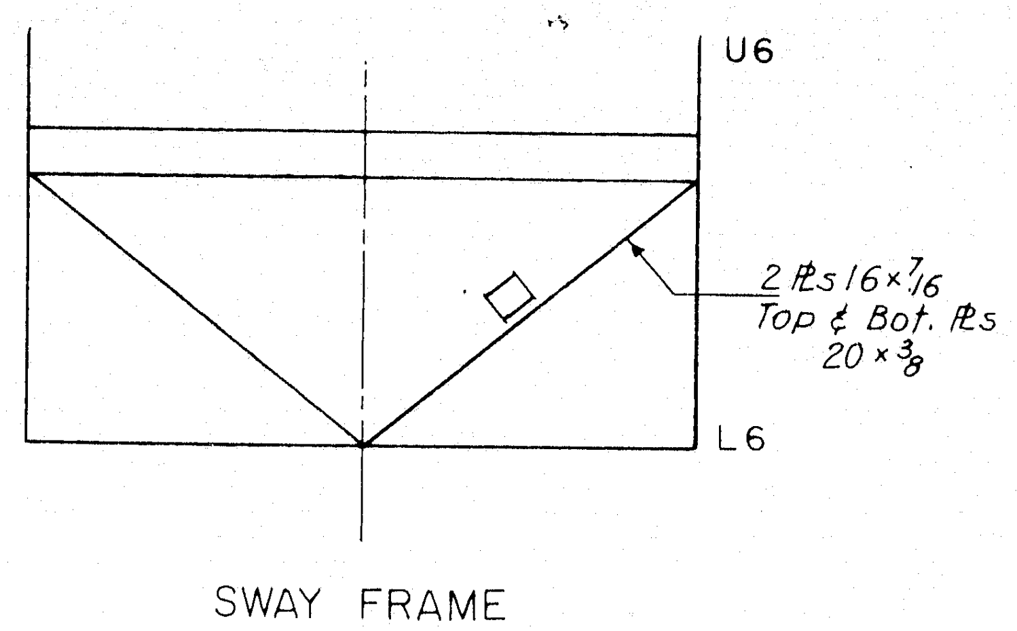

U6
L6
2 ℔s 16×7/16 Top & Bot. ℔s 20×3/8

SWAY FRAME
PANEL POINT 6
(PANEL POINTS 1 THRU 5 SIMILAR)

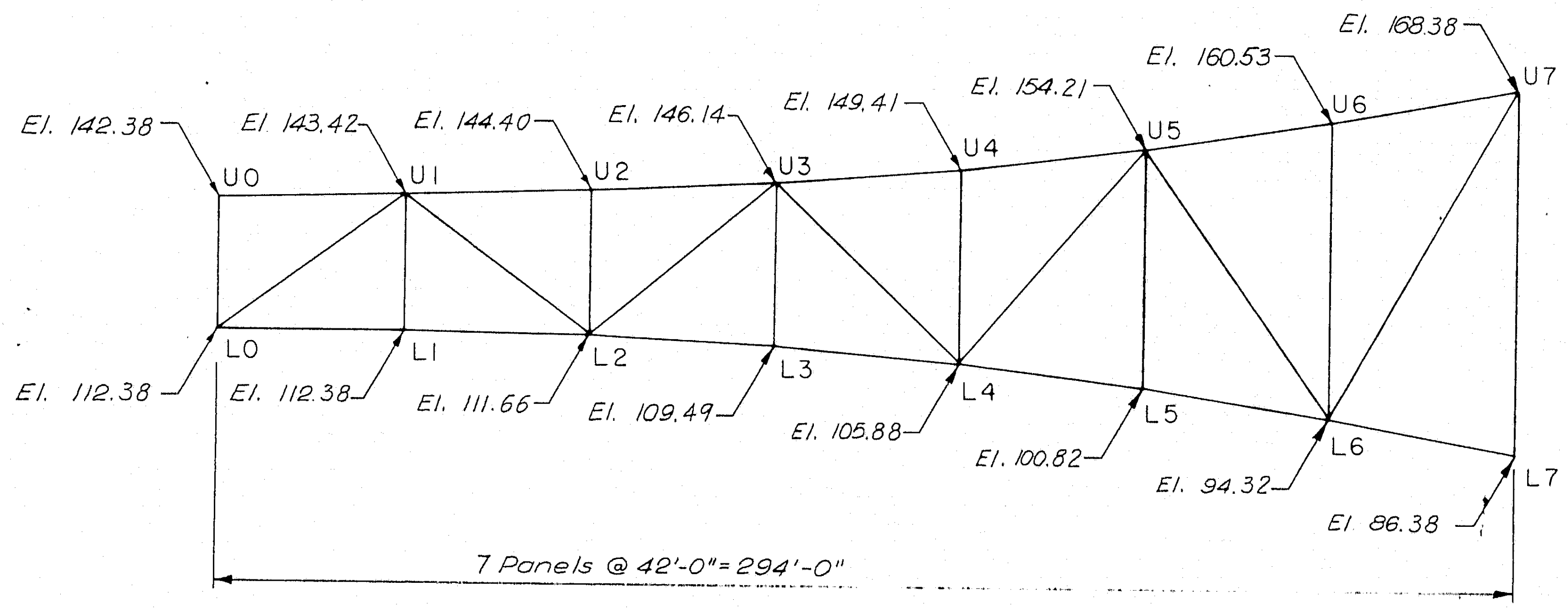

El. 142.38
El. 143.42
El. 144.40
El. 146.14
El. 149.41
El. 154.21
El. 160.53
El. 168.38
U0
U1
U2
U3
U4
U5
U6
U7
L0
L1
L2
L3
L4
L5
L6
L7
El. 112.38
El. 112.38
El. 111.66
El. 109.49
El. 105.88
El. 100.82
El. 94.32
El 86.38
7 Panels @ 42'-0"=294'-0"

END SPAN

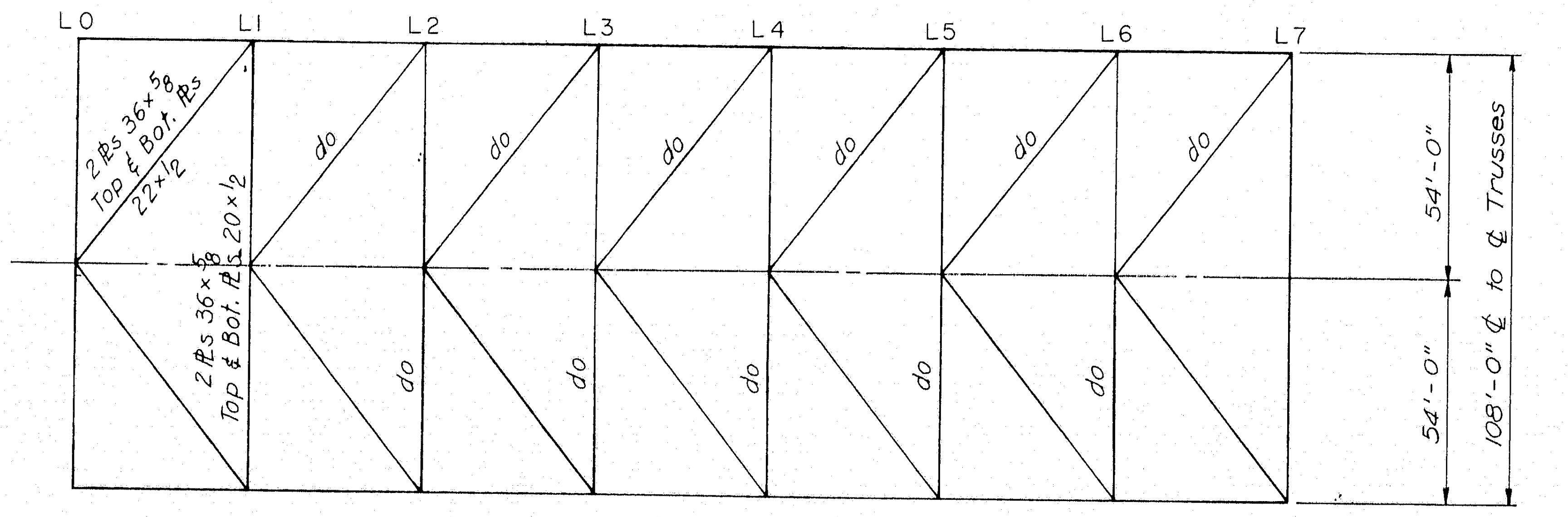

L0
L1
L2
L3
L4
L5
L6
L7
2 ℔s 36×5/8 Top & Bot. ℔s 22×1/2
2 ℔s 36×5/8 Top & Bot. ℔s 20×1/2
do
54'-0"
54'-0"
108'-0" ℄ to ℄ Trusses

BOTTOM LATERALS

Notes:
1. Floorbeams at Panel Point 0 to be cambered for full dead load as given on Sheet 28. Lateral trusses at Panel Point 0 to carry live load and wind load only. During erection temporary shims to be used at floorbeam to lateral truss connection at midspan of floorbeam. See Sheet 19, Sway Frame Panel Point 0 details.

AS BUILT
R.W. Christie 2/5/73

5

DESIGN — W.W.C.
TRACE — Karlis A. Zils
CHECK — S. Nishimura

BRIDGE NO.
IN CHARGE OF — Richard W. Christie

NEW HAMPSHIRE
DEPARTMENT OF PUBLIC WORKS AND HIGHWAYS
AND
MAINE STATE HIGHWAY COMMISSION
INTERSTATE 95 BRIDGE
OVER
PISCATAQUA RIVER
BETWEEN
PORTSMOUTH, NEW HAMPSHIRE AND KITTERY, MAINE
RIVER BRIDGE
TRUSS LAYOUT
END SPANS

SHEET 7 OF 54

HARDESTY & HANOVER
CONSULTING ENGINEERS
NEW YORK, N. Y.

129-102

B. P. R. REG. NO.	STATE	PROJECT NUMBER	SHEET NO.	TOTAL SHEETS
1	MAINE	I-95-1 (22) 16	8	54

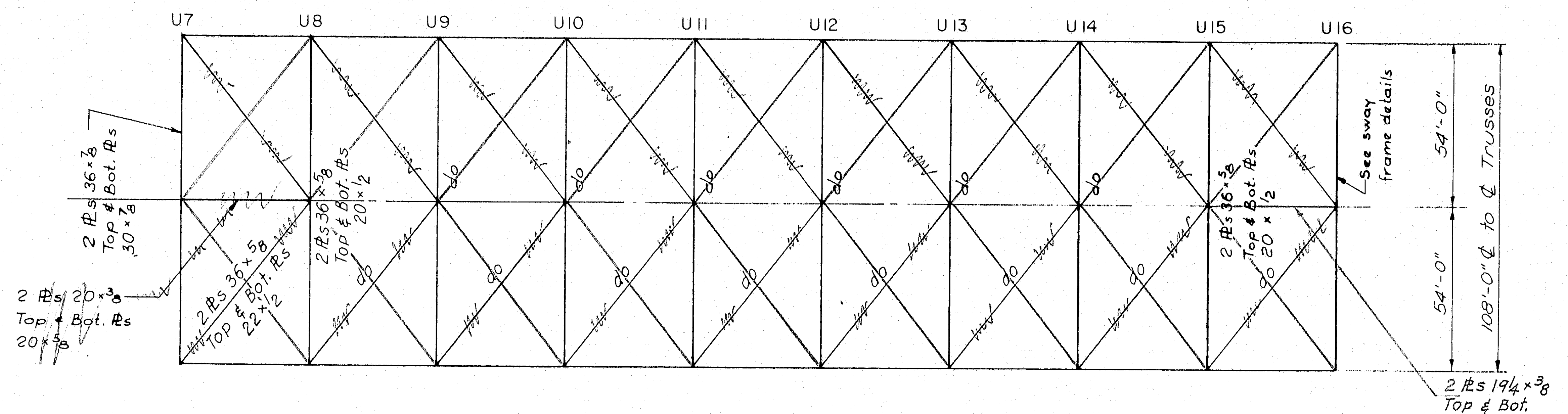
U7
U8
U9
U10
U11
U12
U13
U14
U15
U16
2 ℞s 36×3/8 Top & Bot. ℞s 30×7/8
2 ℞s 36×5/8 Top & Bot. ℞s 20×1/2
2 ℞s 36×5/8 Top & Bot. ℞s 22×1/2
2 ℞s 20×3/8 Top & Bot. ℞s 20×3/8
2 ℞s 36×5/8 Top & Bot. ℞s 20×1/2
do
See sway frame details
54'-0"
54'-0"
108'-0" ℄ to ℄ Trusses
2 ℞s 19¼×3/8 Top & Bot. ℞s 20×5/8

TOP LATERALS

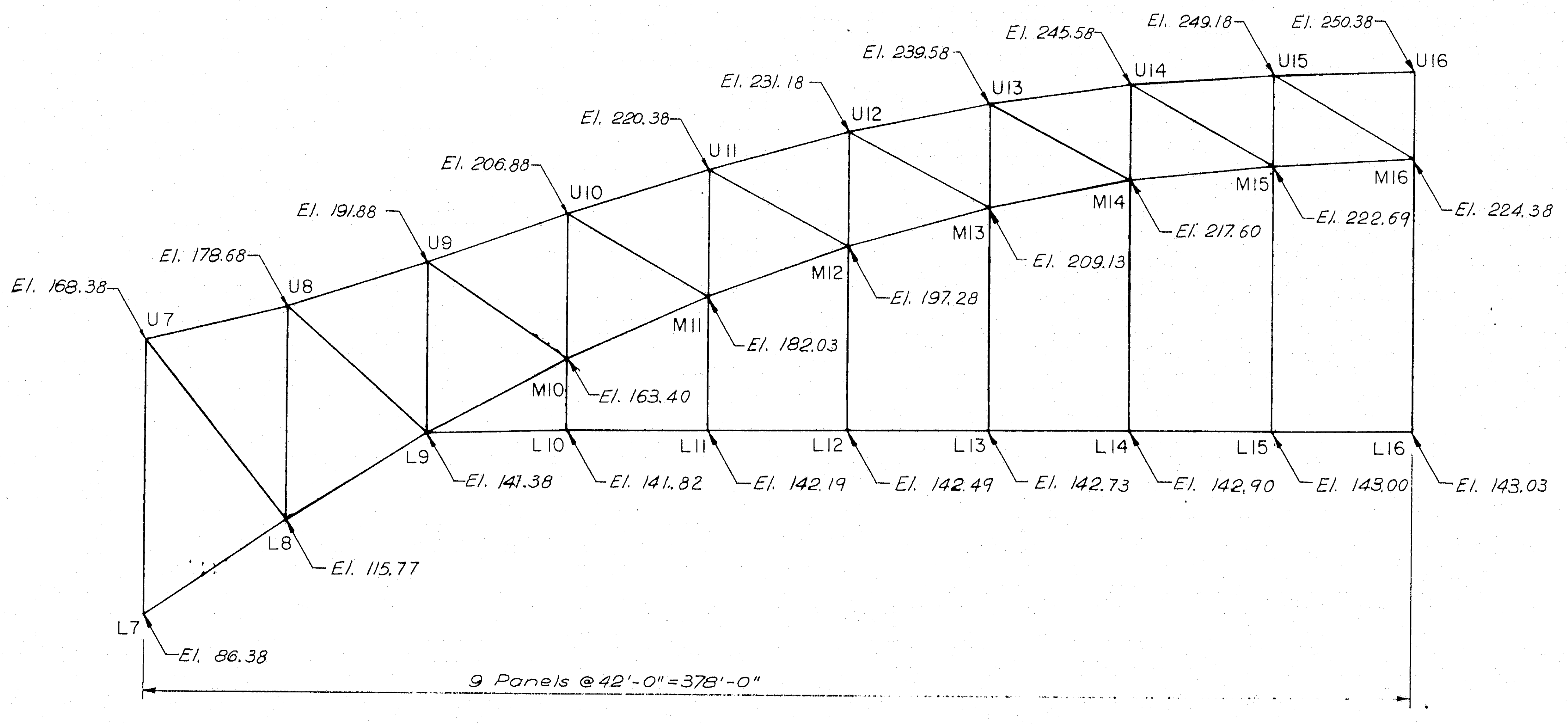
El. 168.38
El. 178.68
El. 191.88
El. 206.88
El. 220.38
El. 231.18
El. 239.58
El. 245.58
El. 249.18
El. 250.38
U7
U8
U9
U10
U11
U12
U13
U14
U15
U16
M10
M11
M12
M13
M14
M15
M16
El. 163.40
El. 182.03
El. 197.28
El. 209.13
El. 217.60
El. 222.69
El. 224.38
L7
L8
L9
L10
L11
L12
L13
L14
L15
L16
El. 86.38
El. 115.77
El. 141.38
El. 141.82
El. 142.19
El. 142.49
El. 142.73
El. 142.90
El. 143.00
El. 143.03
9 Panels @ 42'-0" = 378'-0"

CENTER SPAN

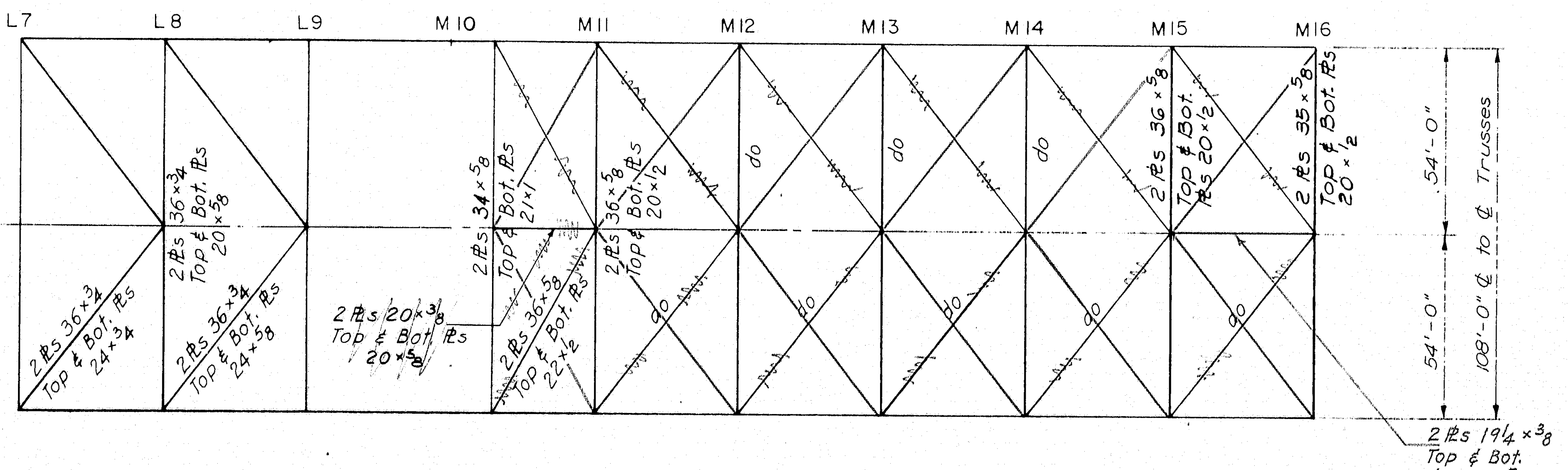
L7
L8
L9
M10
M11
M12
M13
M14
M15
M16
2 ℞s 36×3/4 Top & Bot. ℞s 24×3/4
2 ℞s 36×3/4 Top & Bot. ℞s 24×5/8
2 ℞s 36×3/4 Top & Bot. ℞s 20×5/8
2 ℞s 20×3/8 Top & Bot. ℞s 20×5/8
2 ℞s 34×5/8 Top & Bot. ℞s 21×1
2 ℞s 36×5/8 Top & Bot. ℞s 21×1/2
2 ℞s 36×5/8 Top & Bot. ℞s 20×1/2
do
2 ℞s 36×5/8 Top & Bot. ℞s 20×1/2
2 ℞s 36×5/8 Top & Bot. ℞s 20×1/2
54'-0"
54'-0"
108'-0" ℄ to ℄ Trusses
2 ℞s 19¼×3/8 Top & Bot. ℞s 20×5/8

MIDDLE LATERALS

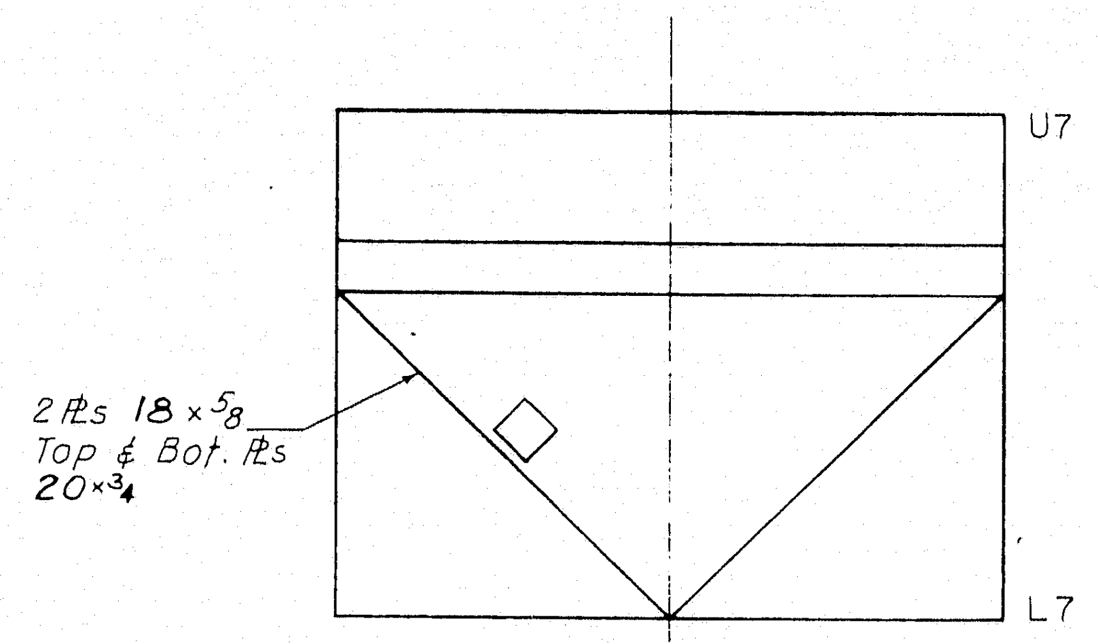
U7
L7
2 ℞s 18×5/8 Top & Bot. ℞s 20×3/4

SWAY FRAME
PANEL POINT 7

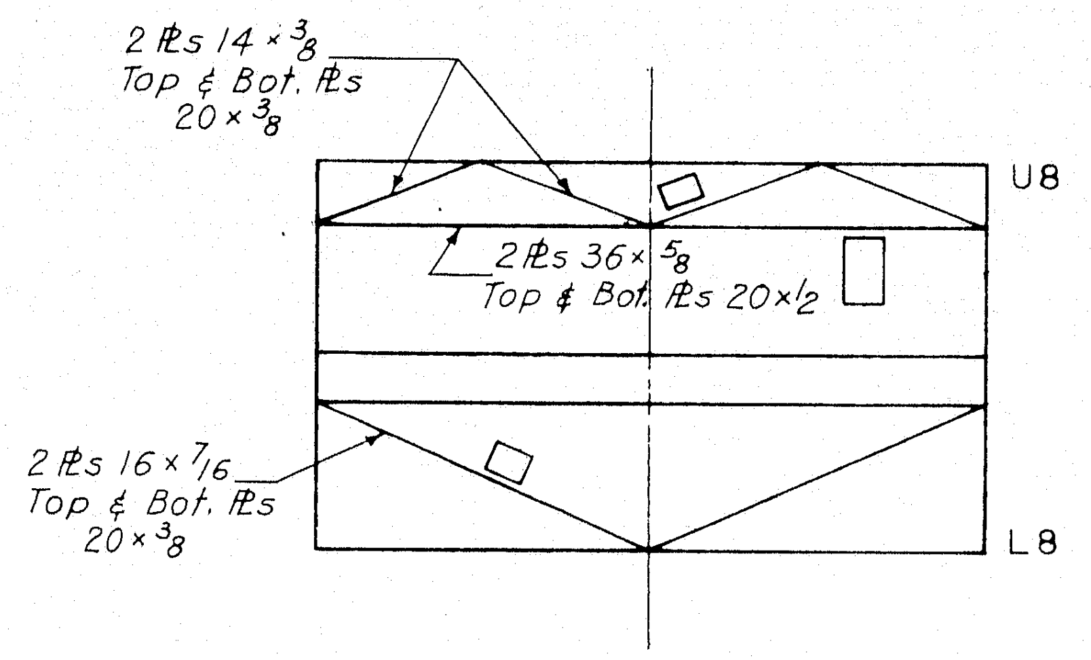
2 ℞s 14×3/8 Top & Bot. ℞s 20×3/8
U8
2 ℞s 36×5/8 Top & Bot. ℞s 20×1/2
2 ℞s 16×7/16 Top & Bot. ℞s 20×3/8
L8

SWAY FRAME
PANEL POINT 8

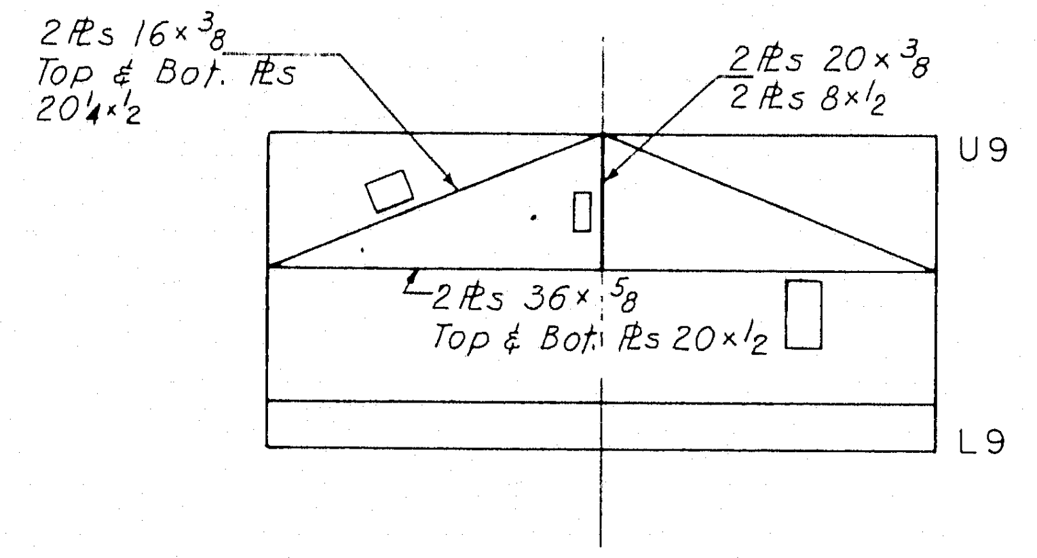
2 ℞s 16×3/8 Top & Bot. ℞s 20¼×1/2
2 ℞s 20×3/8
2 ℞s 8×1/2
U9
2 ℞s 36×5/8 Top & Bot. ℞s 20×1/2
L9

SWAY FRAME
PANEL POINT 9

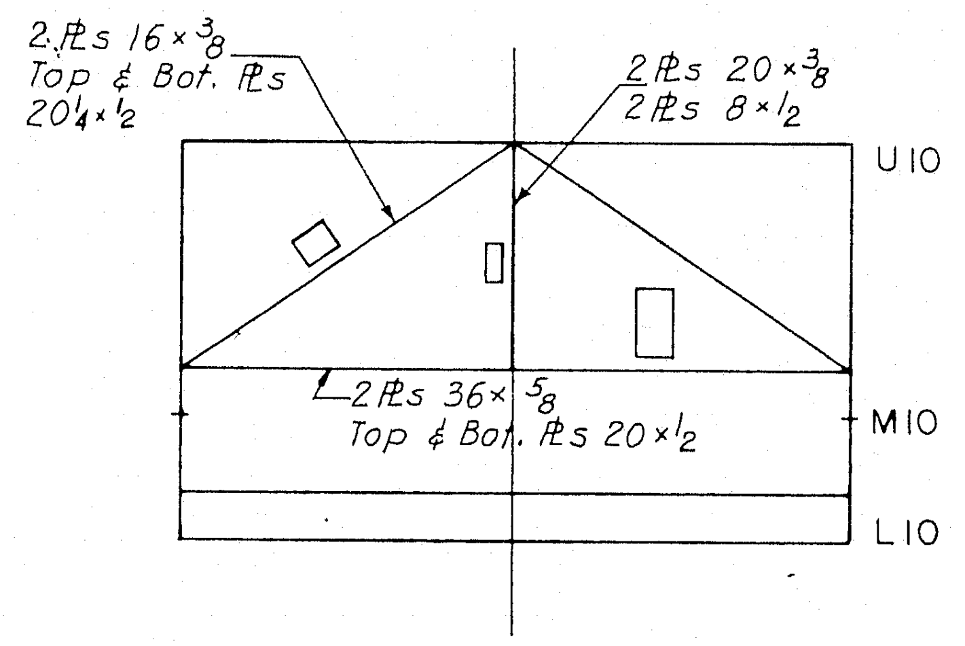
2 ℞s 16×3/8 Top & Bot. ℞s 20¼×1/2
2 ℞s 20×3/8
2 ℞s 8×1/2
U10
2 ℞s 36×5/8 Top & Bot. ℞s 20×1/2
M10
L10

SWAY FRAME
PANEL POINT 10

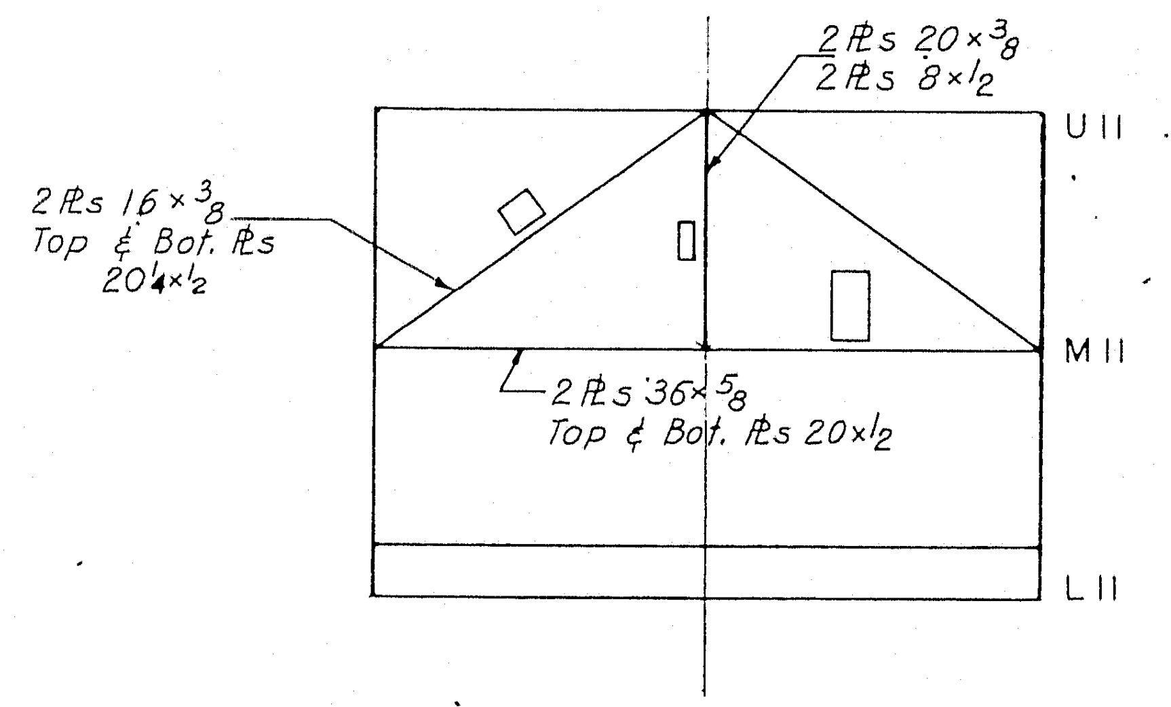
2 ℞s 20×3/8
2 ℞s 8×1/2
U11
2 ℞s 16×3/8 Top & Bot. ℞s 20¼×1/2
2 ℞s 36×5/8 Top & Bot. ℞s 20×1/2
M11
L11

SWAY FRAME
PANEL POINT 11
(PANEL POINTS 12 THRU 16 SIMILAR)

AS BUILT
R.W. Christie 2/5/73

5

DESIGN – W.W.C.
TRACE – Karlis A. Zilf
CHECK – S. Nishimura

BRIDGE NO.
IN CHARGE OF – Richard W. Christie

HARDESTY & HANOVER
CONSULTING ENGINEERS
NEW YORK, N. Y.

NEW HAMPSHIRE
DEPARTMENT OF PUBLIC WORKS AND HIGHWAYS
AND
MAINE STATE HIGHWAY COMMISSION
INTERSTATE 95 BRIDGE
OVER
PISCATAQUA RIVER
BETWEEN
PORTSMOUTH, NEW HAMPSHIRE AND KITTERY, MAINE
RIVER BRIDGE
TRUSS LAYOUT
CENTER SPAN
SHEET 8 OF 54

129-103

B. P. R. REG. NO.	STATE	PROJECT NUMBER	SHEET NO.	TOTAL SHEETS
1	MAINE	I-95-1(22) 16	9	54

END SPAN TRUSS MEMBERS

		TOP CHORDS						
		U0 U1	U1 U2	U2 U3	U3 U4	U4 U5	U5 U6	U6 U7
DEAD LOAD		0	+ 451	+ 452	+ 2722	+ 2731	+ 4801	+ 4830
LIVE LOAD - MAX.		0	+ 394	+ 394	+ 593	+ 593	+ 650	+ 652
IMPACT - MAX.		0	+ 22	+ 22	+ 34	+ 34	+ 37	+ 37
D.L.+ L.L.+ I. - MAX.		0	+ 867	+ 868	+ 3349	+ 3358	+ 5488	+ 5519
LIVE LOAD - MIN.		0	- 504	- 504	- 371	- 371	- 60	- 56
IMPACT - MIN.		0	- 60	- 60	- 44	- 44	- 6	- 6
D.L.+ L.L.+ I. - MIN.		0	- 113	- 112	+ 2307	+ 2316	+ 4735	+ 4768
75 LB. WIND		0	35	35	98	98	149	148
DESIGN STRESS	T(+) C(-)	0	+ 867	+ 868	+ 3349	+ 3358	+ 5488	+ 5519
	GROUP	—	I	I	I	I	I	I
MIN. STRESS/MAX. STRESS		—	- 0.13	- 0.13	+ 0.69	+ 0.69	+ 0.86	+ 0.86
L/R		—	39.3	39.3	—	—	—	—
ALLOWABLE UNIT STRESS		20.0	19.1	19.1	27.0	27.0	45.0	45.0
AREA REQUIRED		—	45.4	45.4	124.0	124.4	122.0	122.6
SECTION USED	SIDE PL.	$36\times\frac{3}{4}$	$36\times\frac{13}{16}$	$36\times\frac{13}{16}$	$36\times1\frac{5}{8}$	$36\times1\frac{5}{8}$	$36\times1\frac{1}{2}$	$36\times1\frac{1}{2}$
	TOP PL.	$28\frac{1}{2}\times\frac{1}{2}$	$28\frac{3}{8}\times\frac{3}{4}$	$28\frac{3}{8}\times\frac{3}{4}$	$26\frac{3}{4}\times\frac{7}{8}$	$26\frac{3}{4}\times\frac{7}{8}$	$27\times\frac{7}{8}$	$27\times\frac{7}{8}$
	PERF. BOT. PL.	$28\frac{1}{2}\times\frac{1}{2}$	$28\frac{3}{8}\times\frac{3}{4}$	$28\frac{3}{8}\times\frac{3}{4}$	$26\frac{3}{4}\times\frac{7}{8}$	$26\frac{3}{4}\times\frac{7}{8}$	$27\times\frac{7}{8}$	$27\times\frac{7}{8}$
AREA USED	GROSS	77.0	92.8	92.8	154.2	154.2	145.6	145.6
	NET	68.6	80.3	80.3	132.0	132.0	128.7	128.7
MATERIAL		A36	A36	A36	A588	A588	A517	A517
AS BUILT	SIDE PL.	Same as above	Same as above				$36\times1\frac{7}{8}$	$36\times1\frac{7}{8}$
	TOP PL.						$26\frac{1}{4}\times1$	$26\frac{1}{4}\times1$
	PERF. BOT. PL.						$26\frac{1}{4}\times1$	$26\frac{1}{4}\times1$
	MATERIAL		A517	A517	A517	A517	A517	A517

		BOTTOM CHORDS						
		L0 L1	L1 L2	L2 L3	L3 L4	L4 L5	L5 L6	L6 L7
DEAD LOAD		+ 116	+ 117	- 1508	- 1512	- 3851	- 3870	- 5578
LIVE LOAD - MAX.		+ 332	+ 332	- 538	- 538	- 616	- 616	- 733
IMPACT - MAX.		+ 40	+ 40	- 31	- 31	- 35	- 35	- 57
D.L.+ L.L.+ I. - MAX.		+ 488	+ 489	- 2077	- 2081	- 4502	- 4521	- 6368
LIVE LOAD - MIN.		- 206	- 206	+ 489	+ 489	+ 190	+ 190	+ 3
IMPACT - MIN.		- 12	- 12	+ 58	+ 58	+ 23	+ 23	0
D.L.+ L.L.+ I. - MIN.		- 102	- 101	- 961	- 965	- 3638	- 3657	- 5575
75 LB. WIND		10	17	67	148	346	570	850
DESIGN STRESS	T(+) C(-)	+ 488	+ 489	- 2077	- 2081	- 4502	- 4521	- 6368
	GROUP	I	I	I	I	I	I	I
MIN. STRESS/MAX. STRESS		- 0.21	- 0.21	+ 0.46	+ 0.46	+ 0.81	+ 0.81	+ 0.87
L/R		39.3	39.3	40.4	40.5	42.4	42.4	41.9
ALLOWABLE UNIT STRESS		18.4	18.4	15.5	15.5	21.0	21.0	32.9
AREA REQUIRED		26.6	26.6	134.2	134.2	215.0	215.0	193.6
SECTION USED	SIDE PL.	$36\times\frac{13}{16}$	$36\times\frac{13}{16}$	$36\times1\frac{1}{2}$	$36\times1\frac{1}{2}$	$36\times2\frac{1}{2}$	$36\times2\frac{1}{2}$	$36\times2\frac{1}{4}$
	TOP PL.	$28\frac{3}{8}\times\frac{3}{4}$	$28\frac{3}{8}\times\frac{3}{4}$	$27\times\frac{3}{4}$	$27\times\frac{3}{4}$	25×1	25×1	$25\frac{1}{2}\times1$
	PERF. BOT. PL.	$28\frac{3}{8}\times\frac{3}{4}$	$28\frac{3}{8}\times\frac{3}{4}$	$27\times\frac{3}{4}$	$27\times\frac{3}{4}$	25×1	25×1	$25\frac{1}{2}\times1$
AREA USED	GROSS	92.8	92.8	140.3	140.3	219.0	219.0	202.0
	NET	80.3	80.3	—	—	—	—	—
MATERIAL		A36	A36	A36	A36	A588	A588	A517
AS BUILT	SIDE PL.	$36\times1\frac{1}{8}$	$36\times1\frac{1}{8}$	$36\times2\frac{5}{8}$	$36\times2\frac{3}{4}$	36×2	$36\times2\frac{1}{4}$	$36\times2\frac{3}{8}$
	TOP PL.	$27\frac{3}{4}\times\frac{3}{4}$	$27\frac{3}{4}\times\frac{3}{4}$	$24\frac{3}{4}\times1$	$24\frac{1}{2}\times1$	26×1	$25\frac{1}{2}\times1$	$25\frac{1}{4}\times1$
	PERF. BOT. PL.	$27\frac{3}{4}\times\frac{3}{4}$	$27\frac{3}{4}\times\frac{3}{4}$	$24\frac{3}{4}\times1$	$24\frac{1}{2}\times1$	26×1	$25\frac{1}{2}\times1$	$25\frac{1}{4}\times1$
	MATERIAL	A36	A36	A588	A588	A517	A517	A517

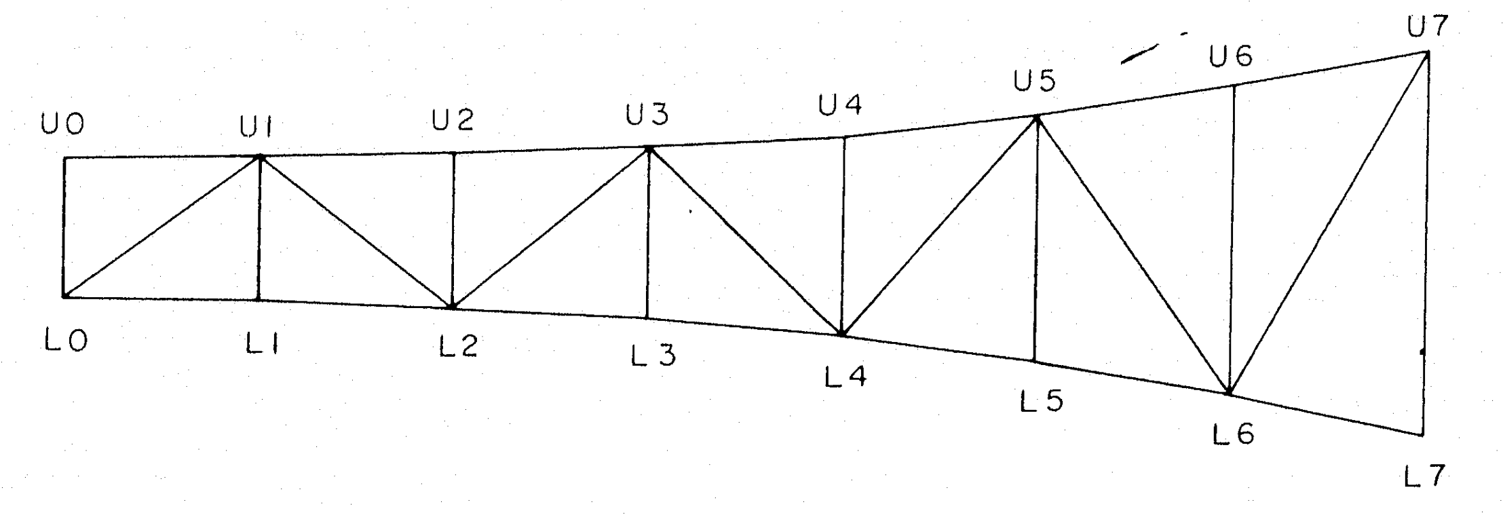

END SPAN
Scale: 1" = 40'-0"

STRESS SHEET NOTES:

1. Direct loads are in kips.
2. Moments are in kip-feet.
3. Unit stresses are in kips per square inch.
4. Areas are in square inches.
5. Section moduli are in inches cubed.

END SPAN TRUSS MEMBERS

		VERTICALS							
		U0 L0	U1 L1	U2 L2	U3 L3	U4 L4	U5 L5	U6 L6	U7 L7
DEAD LOAD		- 681	+ 498	- 516	+ 513	- 452	+ 529	- 420	- 4564
LIVE LOAD - MAX.		- 262	+ 179	- 179	+ 179	- 179	+ 179	- 179	- 693
IMPACT - MAX.		- 63	+ 39	- 39	+ 39	- 39	+ 39	- 39	- 61
D.L.+ L.L.+ I. - MAX.		- 1006	+ 716	- 734	+ 731	- 670	+ 747	- 638	- 5318
LIVE LOAD - MIN.		+ 50	0	+ 8	0	+ 22	0	+ 25	+ 19
IMPACT - MIN.		+ 13	0	0	0	+ 1	0	+ 2	+ 2
D.L.+ L.L.+ I. - MIN.		- 618	+ 498	- 508	+ 513	- 429	+ 529	- 393	- 4543
75 LB. WIND	DIRECT LOAD	8	1	9	7	17	23	37	319
	BENDING	0	0	0	0	0	0	0	4360
DESIGN STRESS	T(+) C(-)	- 1006	+ 716	- 734	+ 731	- 670	+ 747	- 638	- 5318
	GROUP	I	I	I	I	I	I	I	I
MIN. STRESS/MAX. STRESS		+ 0.62	+ 0.70	+ 0.69	+ 0.70	+ 0.64	+ 0.71	+ 0.62	+ 0.85
L/R		28.4	—	50.3	—	67.0	—	102.0	78.0
ALLOWABLE UNIT STRESS		12.3	20.0	15.4	20.0	14.6	20.0	12.9	25.2
AREA REQUIRED		81.5	35.8	47.7	36.6	45.9	37.4	49.5	211.0
SECTION USED	SIDE PL.	36×1	$20\times\frac{3}{4}$	$20\times\frac{3}{4}$	$20\times\frac{3}{4}$	$20\times\frac{3}{4}$	$20\times\frac{3}{4}$	$20\times\frac{3}{4}$	$38\times2\frac{1}{2}$
	PERF. WEB PL.	$28\times\frac{3}{4}$	$28\frac{1}{2}\times\frac{9}{16}$	$28\frac{1}{2}\times\frac{3}{4}$	$28\frac{1}{2}\times\frac{9}{16}$	$28\frac{1}{2}\times\frac{3}{4}$	$28\frac{1}{2}\times\frac{9}{16}$	$28\frac{1}{2}\times\frac{3}{4}$	$25\times1\frac{1}{2}$
AREA USED	GROSS	97.5	49.7	56.3	49.7	56.3	49.7	56.3	232.0
	NET	—	42.9	—	42.9	—	42.9	—	—
SECTION MODULUS		—	—	—	—	—	—	—	—
MATERIAL		A36	A36	A36	A36	A36	A36	A36	A517
AS BUILT	SIDE PL.	Same as above							
	PERF. WEB PL.								
	MATERIAL								

		DIAGONALS						
		L0 U1	U1 L2	L2 U3	U3 L4	L4 U5	U5 L6	L6 U7
DEAD LOAD		- 145	- 712	+ 1363	- 1672	+ 1694	- 1610	+ 1486
LIVE LOAD - MAX.		- 413	- 258	+ 284	- 312	+ 318	- 345	+ 355
IMPACT - MAX.		- 49	- 20	+ 22	- 24	+ 24	- 41	+ 43
D.L.+ L.L.+ I. - MAX.		- 607	- 990	+ 1669	- 2008	+ 2036	- 1996	+ 1884
LIVE LOAD - MIN.		+ 256	+ 247	- 115	+ 32	- 3	+ 36	- 68
IMPACT - MIN.		+ 15	+ 29	- 14	+ 4	0	+ 2	- 3
D.L.+ L.L.+ I. - MIN.		+ 126	- 436	+ 1234	- 1636	+ 1691	- 1572	+ 1415
75 LB. WIND	DIRECT LOAD	14	31	40	46	38	41	31
	BENDING	0	0	0	0	0	0	0
DESIGN STRESS	T(+) C(-)	- 607	- 990	+ 1669	- 2008	+ 2036	- 1996	+ 1884
	GROUP	I	I	I	I	I	I	I
MIN. STRESS/MAX. STRESS		- 0.21	+ 0.44	+ 0.74	+ 0.81	+ 0.83	+ 0.79	+ 0.75
L/R		57.4	57.4	—	70.0	—	86.9	—
ALLOWABLE UNIT STRESS		13.6	13.6	20.0	14.5	20.0	13.7	20.0
AREA REQUIRED		44.6	72.8	83.4	138.5	101.8	145.7	94.2
SECTION USED	SIDE PL.	$30\times\frac{7}{8}$	$30\times\frac{7}{8}$	$30\times1\frac{1}{4}$	30×2	$30\times1\frac{5}{8}$	30×2	$30\times1\frac{1}{2}$
	PERF. WEB PL.	$28\frac{1}{4}\times\frac{3}{4}$	$28\frac{1}{4}\times\frac{3}{4}$	$27\frac{1}{2}\times\frac{3}{4}$	$26\times\frac{7}{8}$	$26\frac{3}{4}\times\frac{3}{4}$	26×1	$27\times\frac{3}{4}$
AREA USED	GROSS	78.4	78.4	99.8	146.3	121.1	150.0	114.0
	NET	64.6	—	88.5	—	106.5	—	100.5
SECTION MODULUS		—	—	—	—	—	—	—
MATERIAL		A36	A36	A36	A36	A36	A36	A36
AS BUILT	SIDE PL.	$30\times1\frac{3}{16}$	$30\times1\frac{1}{2}$	$30\times1\frac{1}{2}$	Same as above			
	PERF. WEB PL.	$27\frac{5}{8}\times\frac{3}{4}$	$27\times\frac{7}{8}$	$27\times\frac{7}{8}$				
	MATERIAL	A588	A588	A36				

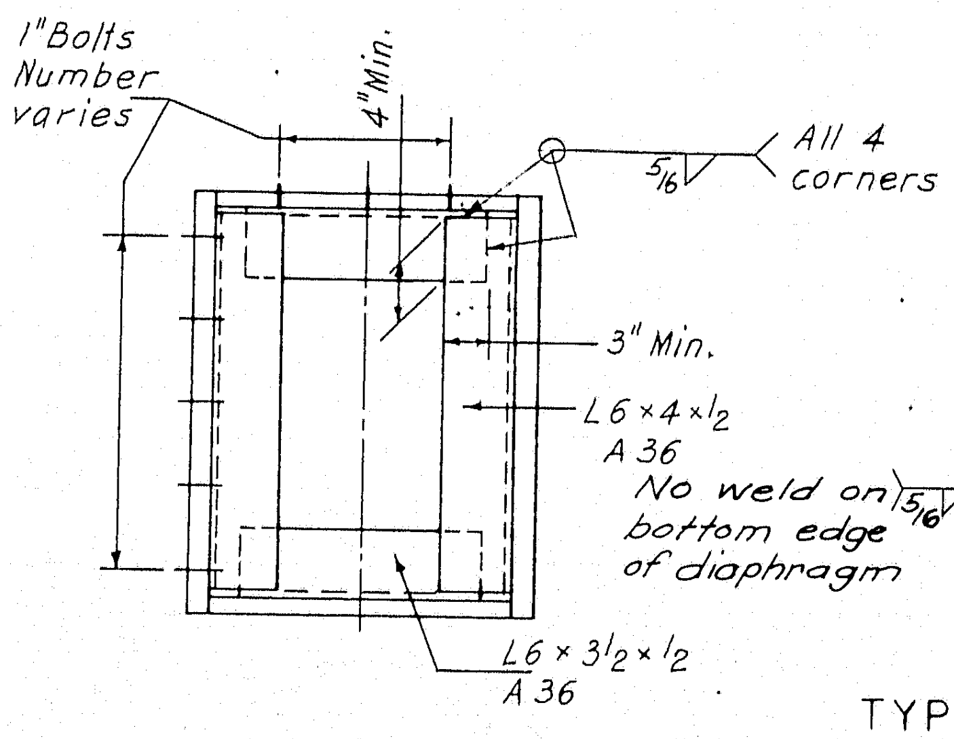

TYPICAL DIAPHRAGM FOR MAIN TRUSS

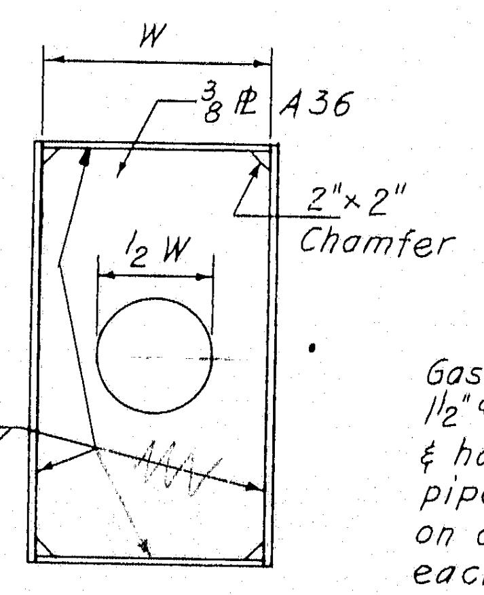

TYPICAL INTERIOR DIAPHRAGM FOR BRACING

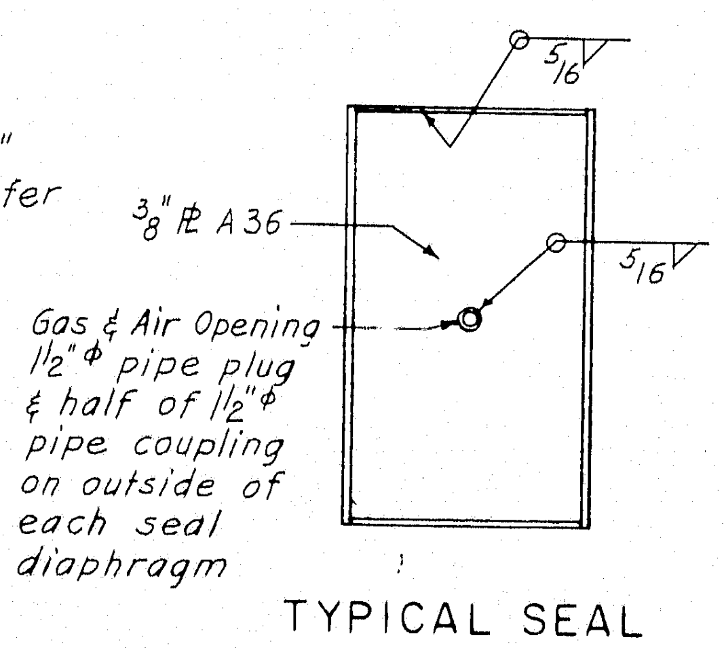

TYPICAL SEAL DIAPHRAGM FOR BRACING

Note:
Diaphragms on truss & bracing to have a maximum spacing of 12'-0".

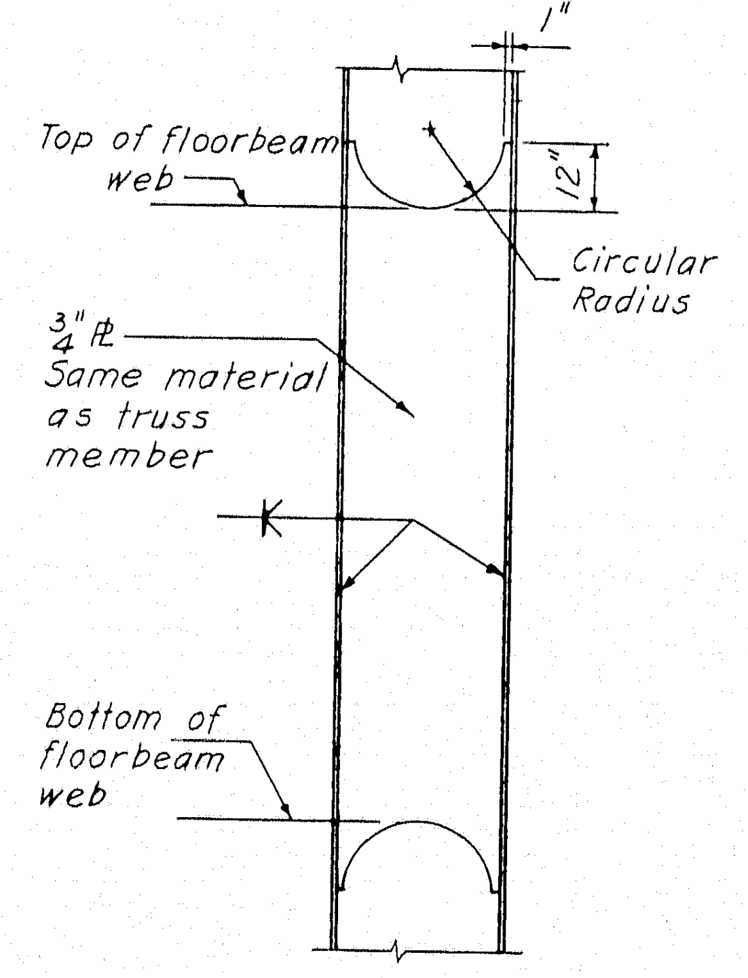

VERTICAL DIAPHRAGM AT FLOOR BEAMS

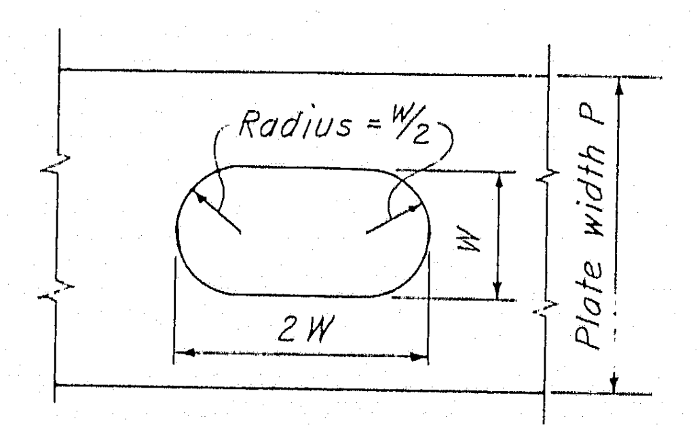

Note:
Perforated plates are called for on the plans thus: ℞ (P-W)
Perforations to be 22" × 11" except where noted otherwise.

PERFORATION DETAIL

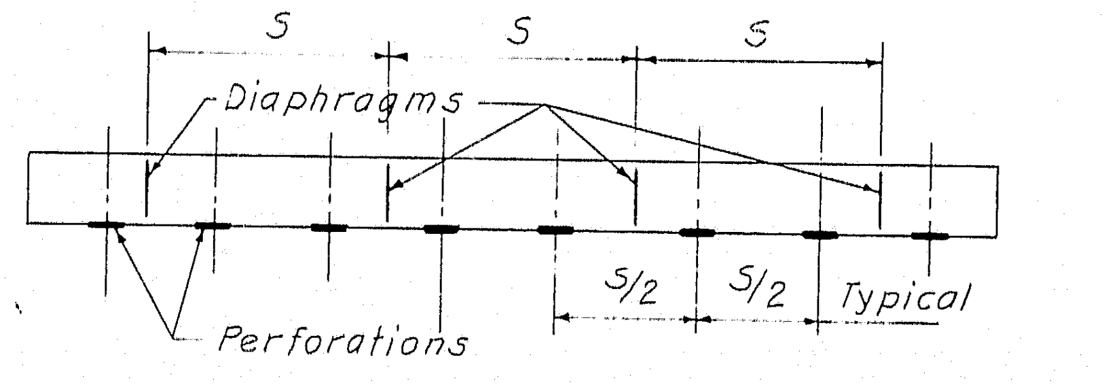

DIAPHRAGM & PERFORATION LAYOUT

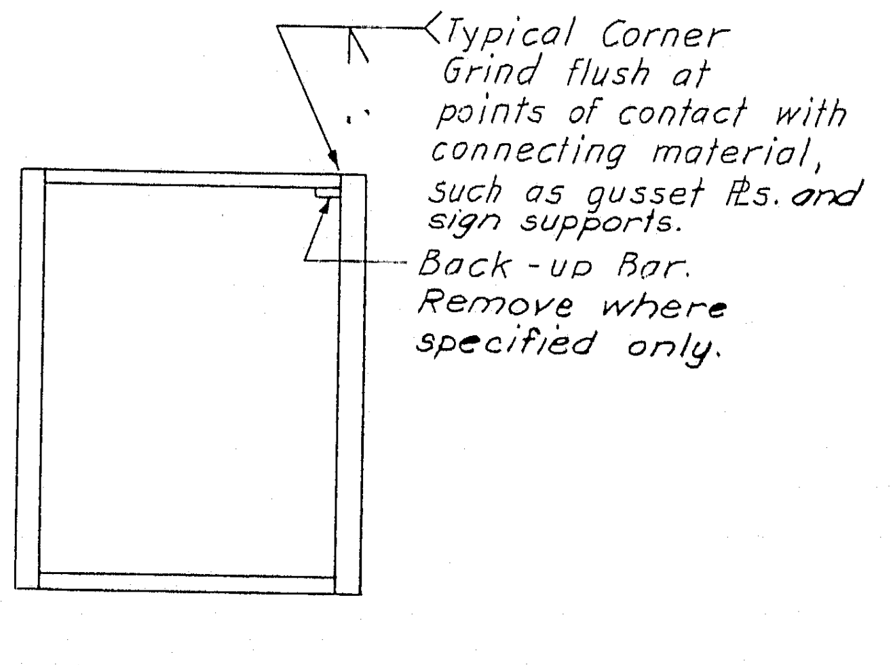

TYPICAL WELDING DETAILS
TRUSSES & BRACING

AS BUILT

5

R.W. Christie 2/5/73

HARDESTY & HANOVER
CONSULTING ENGINEERS
NEW YORK, N. Y.

DESIGN — S. D.
TRACE — A. Klein
CHECK — S. Nishimura

BRIDGE NO.
IN CHARGE OF — Richard W. Christie

NEW HAMPSHIRE
DEPARTMENT OF PUBLIC WORKS AND HIGHWAYS
AND
MAINE STATE HIGHWAY COMMISSION
INTERSTATE 95 BRIDGE
OVER
PISCATAQUA RIVER
BETWEEN
PORTSMOUTH, NEW HAMPSHIRE AND KITTERY, MAINE
RIVER BRIDGE
STRESS SHEET
END SPANS
SHEET 9 OF 54

129-104

B. P. R. REG. NO.	STATE	PROJECT NUMBER	SHEET NO.	TOTAL SHEETS
1	MAINE	I–95–1(22) 16	10	54

CENTER SPAN TRUSS MEMBERS

		TOP CHORDS								
		U7 U8	U8 U9	U9 U10	U10 U11	U11 U12	U12 U13	U13 U14	U14 U15	U15 U16
DEAD LOAD		+ 3543	+ 242	- 936	- 2197	- 3478	- 4705	- 5746	- 6450	- 6694
LIVE LOAD - MAX.		+ 520	+ 324	- 473	- 610	- 765	- 899	- 990	- 1051	- 1077
IMPACT - MAX.		+ 40	+ 39	- 27	- 35	- 44	- 69	- 76	- 60	- 61
D.L.+L.L.+I. - MAX.		+ 4103	+ 605	- 1436	- 2842	- 4287	- 5673	- 6812	- 7561	- 7832
LIVE LOAD - MIN.		- 67	- 331	+ 291	+ 242	+ 216	+ 184	+ 129	+ 95	+ 86
IMPACT - MIN.		- 4	- 19	+ 35	+ 29	+ 26	+ 14	+ 10	+ 11	+ 10
D.L.+L.L.+I. - MIN.		+ 3472	- 108	- 610	- 1926	- 3236	- 4507	- 5607	- 6344	- 6598
75 LB. WIND	DIRECT LOAD	276	275	438	552	614	696	679	683	677
	BENDING	0	0	0	0	0	0	0	0	0
DESIGN STRESS	T(+) C(-)	+ 4103	+ 605	- 1436	- 2842	- 4287	- 5673	- 6812	- 7561	- 7832
	GROUP	I	I	I	I	I	I	I	I	I
MIN. STRESS/MAX. STRESS		+ 0.84	- 0.18	+ 0.43	+ 0.68	+ 0.75	+ 0.80	+ 0.82	+ 0.84	+ 0.84
L/R		—	41.4	42.0	42.5	41.4	41.8	42.4	40.5	40.3
ALLOWABLE UNIT STRESS		45.0	18.7	15.3	21.0	32.4	32.5	32.8	33.1	33.1
AREA REQUIRED		91.2	32.4	93.9	135.3	132.3	174.6	207.7	228.4	236.6
SECTION USED	SIDE PL.	$36\times1\frac{1}{8}$	$36\times\frac{13}{16}$	$36\times1\frac{1}{8}$	$36\times1\frac{5}{8}$	$36\times1\frac{5}{8}$	36×2	$36\times2\frac{1}{2}$	$36\times2\frac{1}{2}$	$36\times2\frac{1}{2}$
	TOP PL.	$27\frac{3}{4}\times\frac{5}{8}$	$28\frac{3}{8}\times\frac{3}{4}$	$27\frac{3}{4}\times\frac{3}{4}$	$26\frac{3}{4}\times\frac{7}{8}$	$26\frac{3}{4}\times1$	26×1	25×1	$25\times1\frac{1}{2}$	$25\times1\frac{5}{8}$
	PERF. BOT. PL.	$27\frac{3}{4}\times\frac{5}{8}$	$28\frac{3}{8}\times\frac{3}{4}$	$27\frac{3}{4}\times\frac{3}{4}$	$26\frac{3}{4}\times\frac{7}{8}$	$26\frac{3}{4}\times1$	26×1	25×1	$25\times1\frac{1}{2}$	$25\times1\frac{5}{8}$
AREA USED	GROSS	108.8	92.8	114.4	154.2	159.5	185.0	219.0	238.5	243.4
	NET	96.2	80.3	—	—	—	—	—	—	—
SECTION MODULUS		—	—	—	—	—	—	—	—	—
MATERIAL		A517	A36	A36	A588	A517	A517	A517	A517	A517
AS BUILT	SIDE PL.	$36\times1\frac{7}{8}$	$36\times1\frac{7}{8}$	$36\times1\frac{1}{2}$	$36\times2\frac{1}{8}$	Same as above →				
	TOP PL.	$26\frac{1}{4}\times1$	$26\frac{1}{4}\times1$	27×1	$25\frac{3}{4}\times1$					
	PERF. BOT. PL.	$26\frac{1}{4}\times1$	$26\frac{1}{4}\times1$	27×1	$24\frac{3}{4}\times1$					
	MATERIAL	A517	A517	A517	A588					

		BOTTOM CHORDS									TIES		
		L7 L8	L8 L9	L9 M10	M10 M11	M11 M12	M12 M13	M13 M14	M14 M15	M15 M16	L9 L10	L10 L11	L11 L11'
DEAD LOAD		- 6690	- 4031	- 6910	- 5479	- 4041	- 2620	- 1302	- 203	+ 537	+ 5891	+ 5891	+ 5891
LIVE LOAD - MAX.		- 890	- 567	- 1037	- 947	- 852	- 736	- 596	- 425	+ 338	+ 994	+ 994	+ 994
IMPACT - MAX.		- 69	- 54	- 80	- 73	- 66	- 42	- 34	- 24	+ 20	+ 57	+ 57	+ 57
D.L.+L.L.+I. - MAX.		- 7649	- 4652	- 8027	- 6499	- 4959	- 3398	- 1932	- 652	+ 895	+ 6942	+ 6942	+ 6942
LIVE LOAD - MIN.		+ 6	+ 74	+ 137	+ 239	+ 332	+ 413	+ 444	+ 416	- 254	- 153	- 153	- 153
IMPACT - MIN.		+ 1	+ 4	+ 11	+ 18	+ 26	+ 24	+ 25	+ 24	- 14	- 18	- 18	- 18
D.L.+L.L.+I. - MIN.		- 6683	- 3953	- 6762	- 5222	- 3683	- 2183	- 833	+ 237	+ 269	+ 5720	+ 5720	+ 5720
75 LB. WIND	DIRECT LOAD	832	188	152	210	121	16	26	130	149	593	689	923
	BENDING	0	2550	3520	3520	0	0	0	0	0	2080	1040	0
DESIGN STRESS	T(+) C(-)	- 7649	- 4652	- 8027	- 6499	- 4959	- 3398	- 1932	- 652	+ 895	+ 6942	+ 6942	+ 6942
	GROUP	I	I	I	I	I	I	I	I	I	I	I	I
MIN. STRESS/MAX. STRESS		+ 0.87	+ 0.85	+ 0.84	+ 0.80	+ 0.74	+ 0.64	+ 0.43	- 0.36	+ 0.30	+ 0.82	+ 0.82	+ 0.82
L/R		49.3	45.1	45.0	45.5	42.5	41.5	40.6	39.4	—	—	—	—
ALLOWABLE UNIT STRESS		28.6	27.6	32.4	32.3	32.7	26.2	18.6	9.4	20.0	45.0	45.0	45.0
AREA REQUIRED		267.4	168.6	247.7	201.2	151.7	129.7	103.9	69.4	44.8	154.3	154.3	154.3
SECTION USED	SIDE PL.	$40\times2\frac{1}{2}$	$40\times1\frac{7}{8}$	$40\times2\frac{1}{2}$	$36\times2\frac{3}{8}$	$36\times1\frac{3}{4}$	$36\times1\frac{1}{2}$	$36\times1\frac{1}{4}$	$36\times\frac{7}{8}$	$36\times\frac{3}{4}$	36×2	36×2	36×2
	TOP PL.	$25\times1\frac{3}{4}$	$26\frac{1}{4}\times\frac{7}{8}$	$25\times1\frac{1}{2}$	$25\frac{1}{4}\times1$	$26\frac{1}{2}\times1$	$27\times\frac{7}{8}$	$27\frac{1}{2}\times\frac{3}{4}$	$28\frac{1}{4}\times\frac{3}{4}$	$28\frac{1}{2}\times\frac{5}{8}$	26×1	26×1	26×1
	PERF. BOT. PL.	$25\times1\frac{3}{4}$	$26\frac{1}{4}\times\frac{7}{8}$	$25\times1\frac{1}{2}$	$25\frac{1}{4}\times1$	$26\frac{1}{2}\times1$	$27\times\frac{7}{8}$	$27\frac{1}{2}\times\frac{3}{4}$	$28\frac{1}{4}\times\frac{3}{4}$	$28\frac{1}{2}\times\frac{5}{8}$	26×1	26×1	26×1
AREA USED	GROSS	268.3	186.3	258.5	210.5	168.0	145.6	123.0	97.1	82.8	185.0	185.0	185.0
	NET	—	—	—	—	—	—	—	83.9	74.3	162.5	162.5	162.5
SECTION MODULUS		2400	2150	2770	2343	—	—	—	—	—	1775	1775	—
MATERIAL		A517	A517	A517	A517	A517	A517	A588	A36	A36	A517	A517	A517
AS BUILT	SIDE PL.	→	$40\times3\frac{1}{2}$	$40\times3\frac{3}{4}$	36×4	Same as above →							
	TOP PL.		$23\times1\frac{1}{2}$	$22\frac{1}{2}\times1\frac{1}{2}$	$22\times1\frac{1}{2}$								
	PERF. BOT. PL.		$23\times1\frac{1}{2}$	$22\frac{1}{2}\times1\frac{1}{2}$	$22\times1\frac{1}{2}$								
	MATERIAL		A514	A514	A514								

CENTER SPAN TRUSS MEMBERS

		VERTICALS									
		U7 L7	U8 L8	U9 L9	U10 M10	U11 M11	U12 M12	U13 M13	U14 M14	U15 M15	U16 M16
DEAD LOAD			- 3623	- 1141	- 1073	- 895	- 710	- 452	- 141	+ 203	+ 382
LIVE LOAD - MAX.			- 600	- 250	- 233	- 208	- 183	- 179	- 174	+ 210	+ 61
IMPACT - MAX.			- 34	- 15	- 18	- 12	- 14	- 14	- 10	+ 12	+ 4
D.L.+L.L.+I. - MAX.			- 4257	- 1406	- 1324	- 1115	- 907	- 645	- 325	+ 425	+ 447
LIVE LOAD - MIN.		See End Span Stress Sheet	+ 88	+ 71	+ 76	+ 84	+ 86	+ 126	+ 163	- 172	- 9
IMPACT - MIN.			11	+ 5	+ 4	+ 4	+ 5	+ 10	+ 9	- 10	- 1
D.L.+L.L.+I. - MIN.			- 3524	- 1065	- 993	- 807	- 619	- 316	+ 31	+ 21	+ 372
75 LB. WIND			149	60	27	14	25	3	51	19	20
DESIGN STRESS	T(+) C(-)		- 4257	- 1406	- 1324	- 1115	- 907	- 645	- 325	+ 425	+ 447
	GROUP		I	I	I	I	I	I	I	I	I
MIN. STRESS/MAX. STRESS			+ 0.83	+ 0.76	+ 0.75	+ 0.72	+ 0.68	+ 0.49	- 0.09	+ 0.05	+ 0.83
L/R			62.9	56.1	49.2	42.4	41.6	37.0	39.6	—	—
ALLOWABLE UNIT STRESS			19.8	15.0	15.2	15.5	15.5	13.2	15.5	20.0	20.0
AREA REQUIRED			215.0	93.7	87.1	71.9	58.5	48.9	21.0	21.3	22.4
SECTION USED	SIDE PL.		$36\times2\frac{1}{2}$	$30\times1\frac{1}{8}$	$30\times1\frac{1}{8}$	30×1	$26\times\frac{13}{16}$	$26\times\frac{3}{4}$	$26\times\frac{3}{4}$	$26\times\frac{3}{4}$	$26\times\frac{3}{4}$
	PERF. WEB PL.		$25\times1\frac{1}{2}$	$27\frac{3}{4}\times\frac{7}{8}$	$27\frac{3}{4}\times\frac{3}{4}$	$28\times\frac{3}{4}$	$28\frac{3}{8}\times\frac{3}{4}$	$28\frac{1}{2}\times\frac{3}{4}$	$28\frac{1}{2}\times\frac{3}{4}$	$28\frac{1}{2}\times\frac{5}{8}$	$28\frac{1}{2}\times\frac{5}{8}$
AREA USED	GROSS		222.0	96.7	92.6	85.5	68.3	65.3	65.3	58.1	58.1
	NET		—	—	—	—	—	—	—	48.0	48.0
MATERIAL			A588	A36	A36	A36	A36	A36	A36	A36	A36
AS BUILT	SIDE PL.		Same as above	$30\times1\frac{1}{8}$	$30\times1\frac{1}{8}$	Same as above →					
	PERF. WEB PL.			$27\frac{3}{4}\times\frac{7}{8}$	$27\frac{3}{4}\times\frac{7}{8}$						
	MATERIAL			A588	A36						

		DIAGONALS									HANGERS	
		U7 L8	U8 L9	U9 M10	U10 M11	U11 M12	U12 M13	U13 M14	U14 M15	U15 M16	M16 L16	OTHERS
DEAD LOAD		+ 3269	+ 4294	+ 1343	+ 1406	+ 1457	+ 1407	+ 1213	+ 841	+ 307	+ 507	+ 507
LIVE LOAD - MAX.		+ 554	+ 687	+ 304	+ 296	+ 301	+ 298	+ 325	+ 361	+ 360	+ 179	+ 179
IMPACT - MAX.		+ 31	+ 39	+ 23	+ 23	+ 18	+ 23	+ 25	+ 21	+ 21	+ 39	+ 39
D.L.+L.L.+I. - MAX.		+ 3854	+ 5020	+ 1670	+ 1725	+ 1776	+ 1728	+ 1563	+ 1223	+ 688	+ 725	+ 725
LIVE LOAD - MIN.		- 87	- 76	- 98	- 84	- 85	- 94	- 156	- 243	- 318	0	0
IMPACT - MIN.		- 11	- 9	- 6	- 5	- 5	- 5	- 12	- 14	- 18	0	0
D.L.+L.L.+I. - MIN.		+ 3171	+ 4209	+ 1239	+ 1317	+ 1367	+ 1308	+ 1045	+ 584	- 29	+ 507	+ 507
75 LB. WIND		113	204	45	3	4	31	63	12	7	—	0
DESIGN STRESS	T(+) C(-)	+ 3854	+ 5020	+ 1670	+ 1725	+ 1776	+ 1728	+ 1563	+ 1223	+ 688	—	+ 725
	GROUP	I	I	I	I	I	I	I	I	I	II	I
MIN. STRESS/MAX. STRESS		+ 0.82	+ 0.84	+ 0.74	+ 0.76	+ 0.77	+ 0.76	+ 0.67	+ 0.48	- 0.04	- 0.22	+ 0.70
L/R		—	—	—	—	—	—	—	—	—	—	—
ALLOWABLE UNIT STRESS		27.0	27.0	20.0	20.0	20.0	20.0	20.0	20.0	20.0	22.8	20.0
AREA REQUIRED		142.7	185.9	83.5	86.2	88.8	86.4	78.2	61.2	34.4	57.2	36.3
SECTION USED	SIDE PL.	$36\times1\frac{5}{8}$	$36\times2\frac{5}{8}$	$30\times1\frac{1}{4}$	$30\times1\frac{1}{4}$	$30\times1\frac{1}{4}$	$30\times1\frac{1}{4}$	$30\times1\frac{1}{4}$	$30\times\frac{3}{4}$	$26\times\frac{3}{4}$	$20\times1\frac{1}{4}$	$20\times\frac{3}{4}$
	PERF. WEB PL.	$26\frac{3}{4}\times1\frac{1}{8}$	$24\frac{3}{4}\times1\frac{1}{8}$	$27\frac{1}{2}\times\frac{3}{4}$	$27\frac{1}{2}\times\frac{3}{4}$	$27\frac{1}{2}\times\frac{3}{4}$	$27\frac{1}{2}\times\frac{3}{4}$	$27\frac{1}{2}\times\frac{9}{16}$	$28\frac{1}{2}\times\frac{5}{8}$	$28\frac{1}{2}\times\frac{3}{4}$	$27\frac{1}{2}\times\frac{3}{4}$	$28\frac{1}{2}\times\frac{1}{2}$
AREA USED	GROSS	152.4	219.9	99.8	99.8	99.8	99.8	93.6	66.9	65.3	75.5	47.5
	NET	144.3	190.4	88.5	88.5	88.5	88.5	82.3	66.9	65.3	64.2	40.7
MATERIAL		A588	A588	A36	A36	A36	A36	A36	A36	A36	A36	A36
AS BUILT	SIDE PL.	→										
	PERF. WEB PL.											
	MATERIAL											

STRESS SHEET NOTES:

1. Direct loads are in kips.
2. Moments are in kip-feet.
3. Unit stresses are in kips per square inch.
4. Areas are in square inches.
5. Section moduli are in inches cubed.

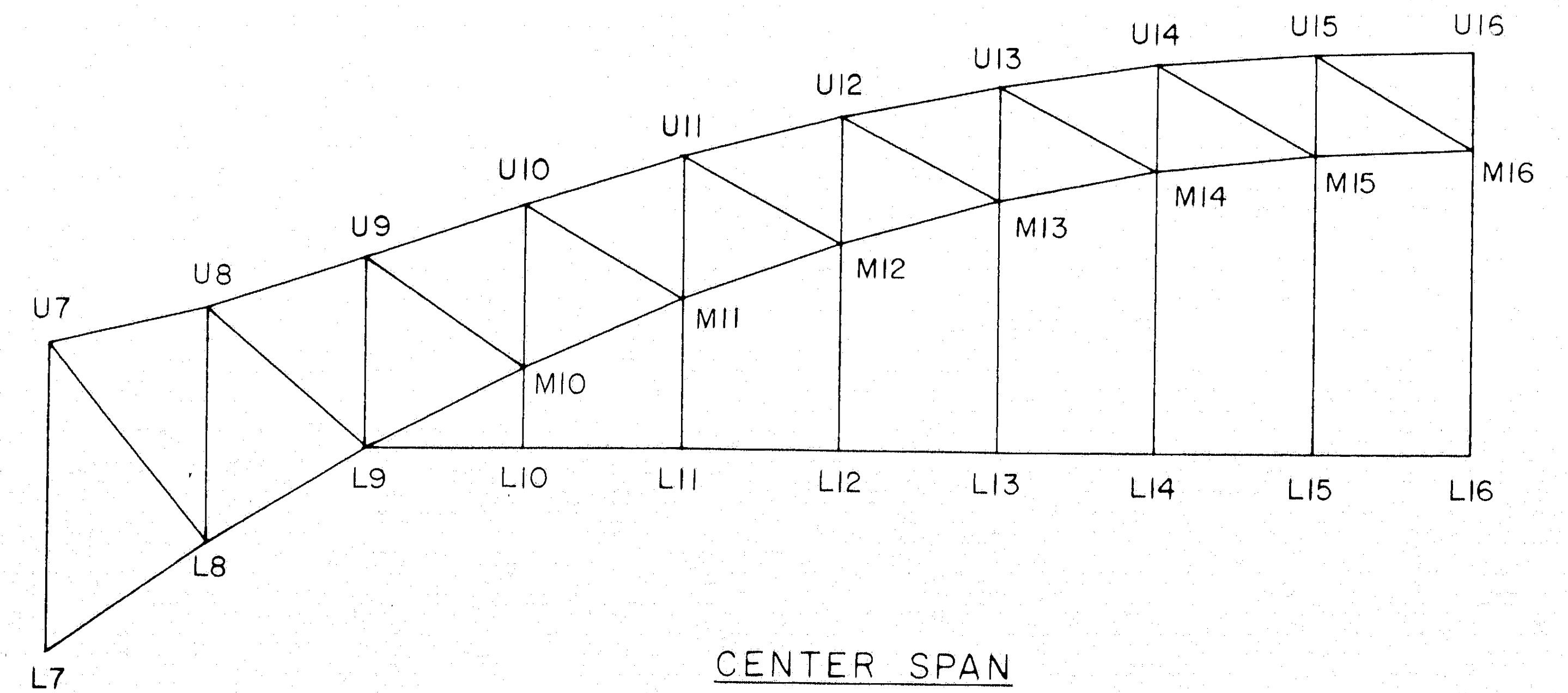

CENTER SPAN
Scale: 1" = 40'-0"

REACTIONS				
	ANCHOR PIER			MAIN PIER
	TRUSS	APPROACHES	TOTAL	
DEAD LOAD	400	398	798	9,100
LIVE LOAD	300	192	492	1,310
IMPACT	36	43	79	115
D.L.+L.L.+I.	736	633	1,369	10,525
75# WIND (HOR. REACTION)	162	18	180	678
75# WIND (VERT. REACTION)	68	12	90	936
DESIGN (VERT. REACTION)	–	–	1,369	10,525

All Loads in Kips

AS BUILT
R.W. Christie 2/5/73

5

DESIGN – S.D.
TRACE – A. Klein
CHECK – S. Nishimura

BRIDGE NO. IN CHARGE OF – Richard W. Christie

NEW HAMPSHIRE
DEPARTMENT OF PUBLIC WORKS AND HIGHWAYS
AND
MAINE STATE HIGHWAY COMMISSION
INTERSTATE 95 BRIDGE
OVER
PISCATAQUA RIVER
BETWEEN
PORTSMOUTH, NEW HAMPSHIRE AND KITTERY, MAINE
RIVER BRIDGE
STRESS SHEET
CENTER SPAN

HARDESTY & HANOVER
CONSULTING ENGINEERS
NEW YORK, N. Y.

SHEET 10 OF 54

129-105

B. P. R. REG. NO.	STATE	PROJECT NUMBER	SHEET NO.	TOTAL SHEETS
1	MAINE	I-95-1(22)16	11	54

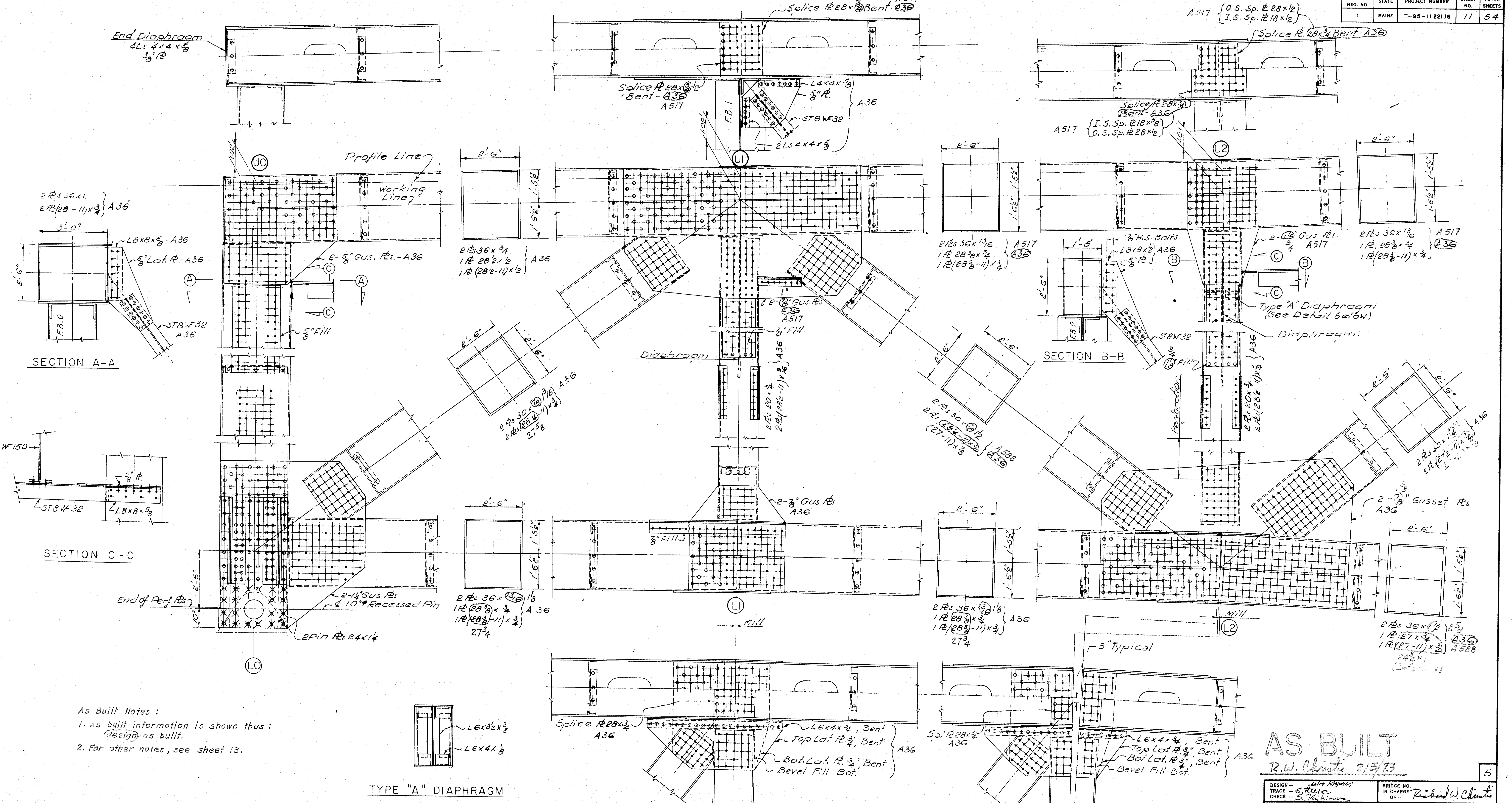
End Diaphragm
4Ls 4x4x3/8
3/8" ℄
U0
1.02'
Profile Line
Working Line
2 ℄s 36x1.
2 ℄s (28-11)x3/4
A36
3'-0"
2'-6"
L8x8x5/8-A36
5/8" Lat. ℄.-A36
ST8WF32
A36
F.B.0
SECTION A-A
A
C
2-5/8" Gus. ℄s.-A36
5/8" Fill
36WF150
5/8" ℄
ST8WF32
L8x8x5/8
SECTION C-C
End of Perf. ℄s
2'-6"
10"
2-1 1/4" Gus ℄s
℄ 10"⌀ Recessed Pin
2Pin ℄s 24x1 1/4
L0
Splice ℄ 28x3/4 1/2 Bent-A36 A517
Splice ℄ 28x3/4 1/2 Bent-A36 A517
L4x4x5/8
5/8" ℄.
ST8WF32
2Ls 4x4x5/8
A36
F.B.1
1.02'
U1
2'-6"
1'-5 1/2"
1'-6 1/2"
2 ℄s 36x3/4
1 ℄ 28 1/2x1/2
1 ℄ (28 1/2-11)x1/2
A36
1"
2-7/8" Gus. ℄s A36 A517
7/8" Fill.
Diaphragm
2 ℄s 20x3/4
2 ℄s (28 1/2-11)x9/16
A36
2'-6"
2'-6"
2 ℄s 30x7/8 13/16
2 ℄s (28 1/4-11)x3/4
27 5/8
A36
A517 {O.S. Sp. ℄ 28x1/2 / I.S. Sp. ℄ 18x1/2}
Splice ℄. 28x3/4 Bent-A36
Splice ℄ 28x3/4 Bent-A36
A517 {I.S. Sp. ℄ 18x5/8 / O.S. Sp. ℄ 28x1/2}
1.01'
U2
2 ℄s 36x13/16
1 ℄ 28 3/8x3/4
1 ℄ (28 3/8-11)x3/4
A517 A36
1'-8"
7/8" H.S. Bolts.
L8x8x1/2 A36
5/8" ℄
F.B.2
ST8WF32
SECTION B-B
B
2-1 1/8 3/4" Gus ℄s. A517
Type "A" Diaphragm (See Detail below)
Diaphragm.
1 1/8 3/4" Fill
Perforation
2 ℄s 20x3/4
2 ℄s (28 1/2-11)x3/4
A36
2 ℄s 36x13/16
1 ℄, 28 3/8x3/4
1 ℄ (28 3/8-11)x3/4
A517 A36
2 ℄s 30x7/8 1 1/2
2 ℄s (28 1/4-11)x3/4
(27-11)x7/8
A588 A36
2 ℄s 30x1 1/4 1/2
2 ℄ (27 1/2-11)x3/4
(27-11)x7/8
A36
2-7/8 5/8" Gusset ℄s
A36
2-7/8" Gus. ℄s
A36
7/8" Fill
L1
Mill
2 ℄s 36x13/16 1 1/8
1 ℄ 28 3/8x3/4
1 ℄ (28 3/8-11)x3/4
27 3/4
A 36
2 ℄s 36x3/16 1 1/8
1 ℄ 28 3/8x3/4
1 ℄ (28 3/8-11)x3/4
27 3/4
A36
Mill
L2
2 ℄s 36x1 1/2 2 5/8
1 ℄ 27x3/4
1 ℄ (27-11)x3/4
24 3/4
A36 A588
3" Typical
Splice ℄ 28x3/4 A36
L6x4x3/4, Bent
Top Lat. ℄ 3/4", Bent
Bot. Lat. ℄ 3/4", Bent
Bevel Fill Bot.
A36
Spl ℄ 28x3/4 A36
L6x4x3/4, Bent
Top Lat. ℄ 3/4", Bent
Bot. Lat. ℄ 3/4", Bent
Bevel Fill Bot.
A36
L6x3 1/2x3/8
L6x4x3/8

As Built Notes :

1. As built information is shown thus : (design)-as built.
2. For other notes, see sheet 13.

TYPE "A" DIAPHRAGM

Welding details similar to those for Typical Diaphragm

Notes for Panel Point Details (Sheets 11 thru 18)

1) For bolt sizes see General Notes. Connection angles bolted to truss have 1"⌀ bolts on both legs.
2) Verticals & diagonals have half perforations at ends unless shown otherwise.
3) Stiffeners for gusset ℄s are L3 1/2x3 1/2x1/2 unless noted. Material to match that of gusset ℄.

AS BUILT
R.W. Christie 2/5/73

5

DESIGN — Calev Kryzanski
TRACE — E. Ellie
CHECK — S. Nishimura

BRIDGE NO.
IN CHARGE OF — Richard W. Christie

HARDESTY & HANOVER
CONSULTING ENGINEERS
NEW YORK, N. Y.

NEW HAMPSHIRE
DEPARTMENT OF PUBLIC WORKS AND HIGHWAYS
AND
MAINE STATE HIGHWAY COMMISSION
INTERSTATE 95 BRIDGE
OVER
PISCATAQUA RIVER
BETWEEN
PORTSMOUTH, NEW HAMPSHIRE AND KITTERY, MAINE
RIVER BRIDGE

PANEL POINTS 0 - 2

SHEET 11 OF 54

129-106

B. P. R. REG. NO.	STATE	PROJECT NUMBER	SHEET NO.	TOTAL SHEETS
1	MAINE	I-95-1(22)16	12	54

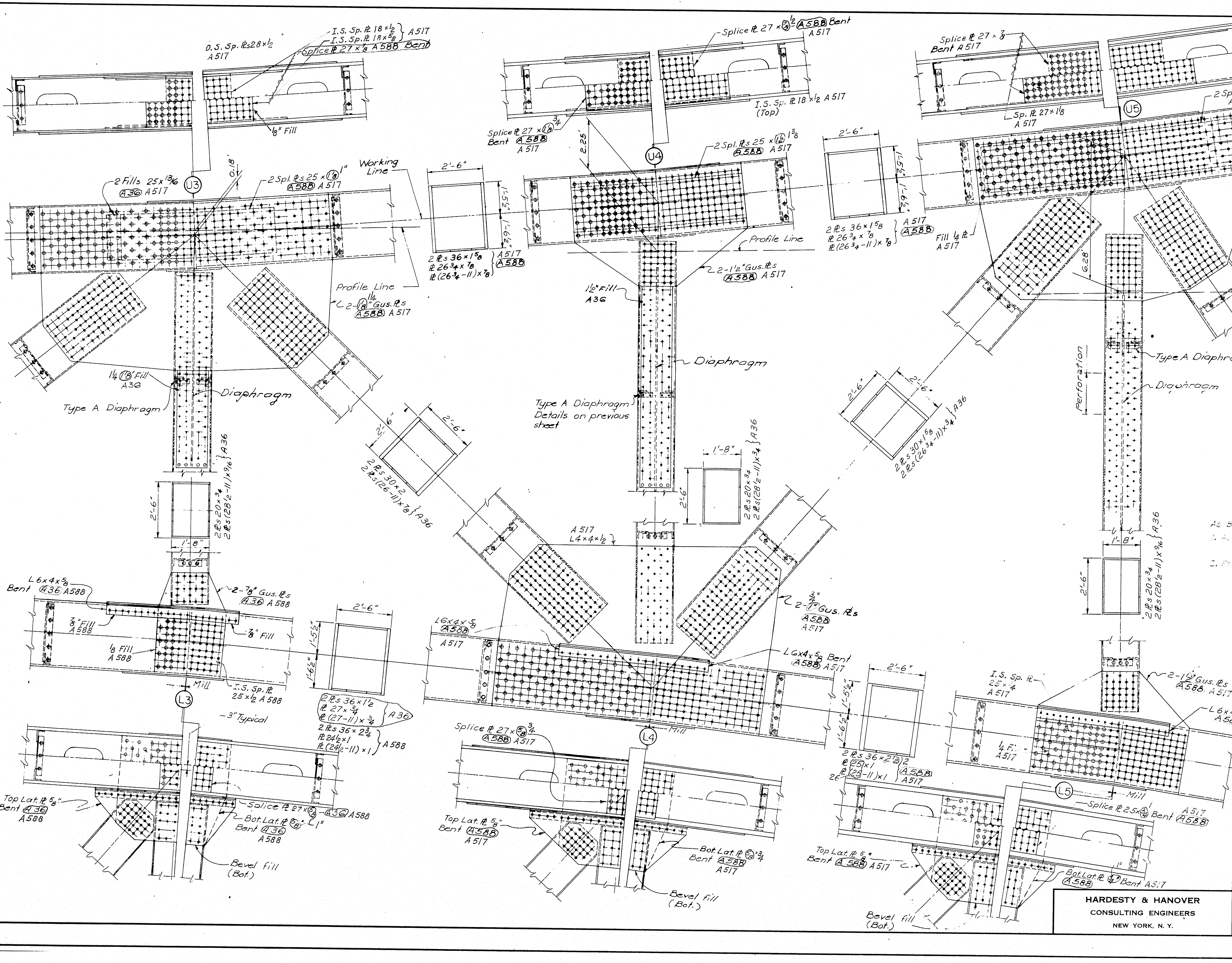

O.S. Sp. Pls 28×1½ A517
I.S. Sp. Pl 18×1½
I.S. Sp. Pl 18×5/8
Splice Pl 27×7/8 A588 Bent
1/8" Fill
U3
0.18'
2 Fills 25×13/16 A36 A517
2 Spl. Pls 25×1" A588 A517
Working Line
Profile Line
2-1½" Gus. Pls A588 A517
1¼ (1/8) Fill A36
Type A Diaphragm
Diaphragm
2'-6"
1'-5½"
1'-6½"
2 Pls 36×1 5/8
Pl 26¾×7/8
Pl (26¾-11)×7/8
A517 A588
2 Pls 30×2
2 Pls (26-11)×7/8 A36
2 Pls 20×¾
2 Pls (28½-11)×9/16 A36
1'-8"
L 6×4×5/8 Bent A36 A588
2-7/8" Gus. Pls A36 A588
7/8" Fill A588
1/8 Fill A588
7/8" Fill
Mill
I.S. Sp. Pl 25×½ A588
L3
3" Typical
2 Pls 36×1½
Pl 27×¾
Pl (27-11)×¾ A36
2 Pls 36×2¾
Pl 24½×1
Pl (24½-11)×1 A588
Top Lat. Pl 5/8" Bent A36 A588
Splice Pl 27×5/8 A36 A588
Bot. Lat. Pl 5/8" 1" A36 A588
Bevel fill (Bot.)
Splice Pl 27×1/2 A588 Bent A517
I.S. Sp. Pl 18×½ A517 (Top)
Splice Pl 27×1/8 ¾ Bent A588 A517
U4
2.25'
2 Spl. Pls 25×1/2 1 3/8 A588 A517
2-1½" Gus. Pls A588 A517
1½" Fill A36
Diaphragm
Type A Diaphragm Details on previous sheet
2 Pls 20×¾
2 Pls (28½-11)×¾ A36
A517 L4×4×½
2-1" ¾" Gus. Pls A588 A517
L6×4×5/8 A588 A517
L6×4×5/8 Bent A588 A517
L4
Mill
Splice Pl 27×5/8 ¾ A588 A517
Top Lat. Pl 5/8" Bent A588 A517
Bot. Lat. Pl 5/8 ¾ Bent A588 A517
Bevel fill (Bot.)
2 Pls 36×2½
Pl 25×1
Pl (25-11)×1 A588 A517
Splice Pl 27×7/8 Bent A517
Sp. Pl 27×1 1/8 A517
U5
2 Spl. Pls 25×1½ A517
2 Pls 36×1½ 1/8
Pl 27×7/8
Pl (27-11)×7/8
Pl 26¼×1
Pl (26¼-11)×1 A517
2 Pls 36×1 5/8
Pl 26¾×7/8
Pl (26¾-11)×7/8 A517 A588
Fill ¼ Pl A517
Fill 25×1/8 A517
2-1 1/8 Gus. Pls A517
6.28'
Profile Line
Type A Diaphragm
Perforation
Diaphragm
2 Pls 30×1 5/8
2 Pls (26¾-11)×¾ A36
2 Pls 30×2
2 Pls (26-11)×1 A36
2 Pls 20×¾
2 Pls (28½-11)×9/16 A36
I.S. Sp. Pl 25×¼ A517
2-1½" Gus. Pls A588 A517
L 6×4×5/8 Bent A588 A517
¼ Fill A517
2 Pls 36×2¼
Pl 25×1
Pl (25-11)×1
25½
A517 A588
Mill
L5
Splice Pl 25×5/8 Bent A517 A588
Top Lat. Pl 5/8" Bent A588 A517
Bot. Lat. Pl 5/8" Bent A588 A517
Bevel fill (Bot.)

As Built Notes:

1. As built information is shown thus: design as built.
2. For other notes, see sheet 13.

AS BUILT
R.W. Christie 2/5/73

5

DESIGN – Alex Krugowski
TRACE – L. Clendenin
CHECK – S. Nishimura

BRIDGE NO.
IN CHARGE OF – Richard W. Christie

HARDESTY & HANOVER
CONSULTING ENGINEERS
NEW YORK, N. Y.

NEW HAMPSHIRE
DEPARTMENT OF PUBLIC WORKS AND HIGHWAYS
AND
MAINE STATE HIGHWAY COMMISSION

INTERSTATE 95 BRIDGE
OVER
PISCATAQUA RIVER
BETWEEN
PORTSMOUTH, NEW HAMPSHIRE AND KITTERY, MAINE

RIVER BRIDGE

PANEL POINTS 3 - 5

SHEET 12 OF 54

129-107

B. P. R. REG. NO.	STATE	PROJECT NUMBER	SHEET NO.	TOTAL SHEETS
1	MAINE	I-95-1(22)16	13	54

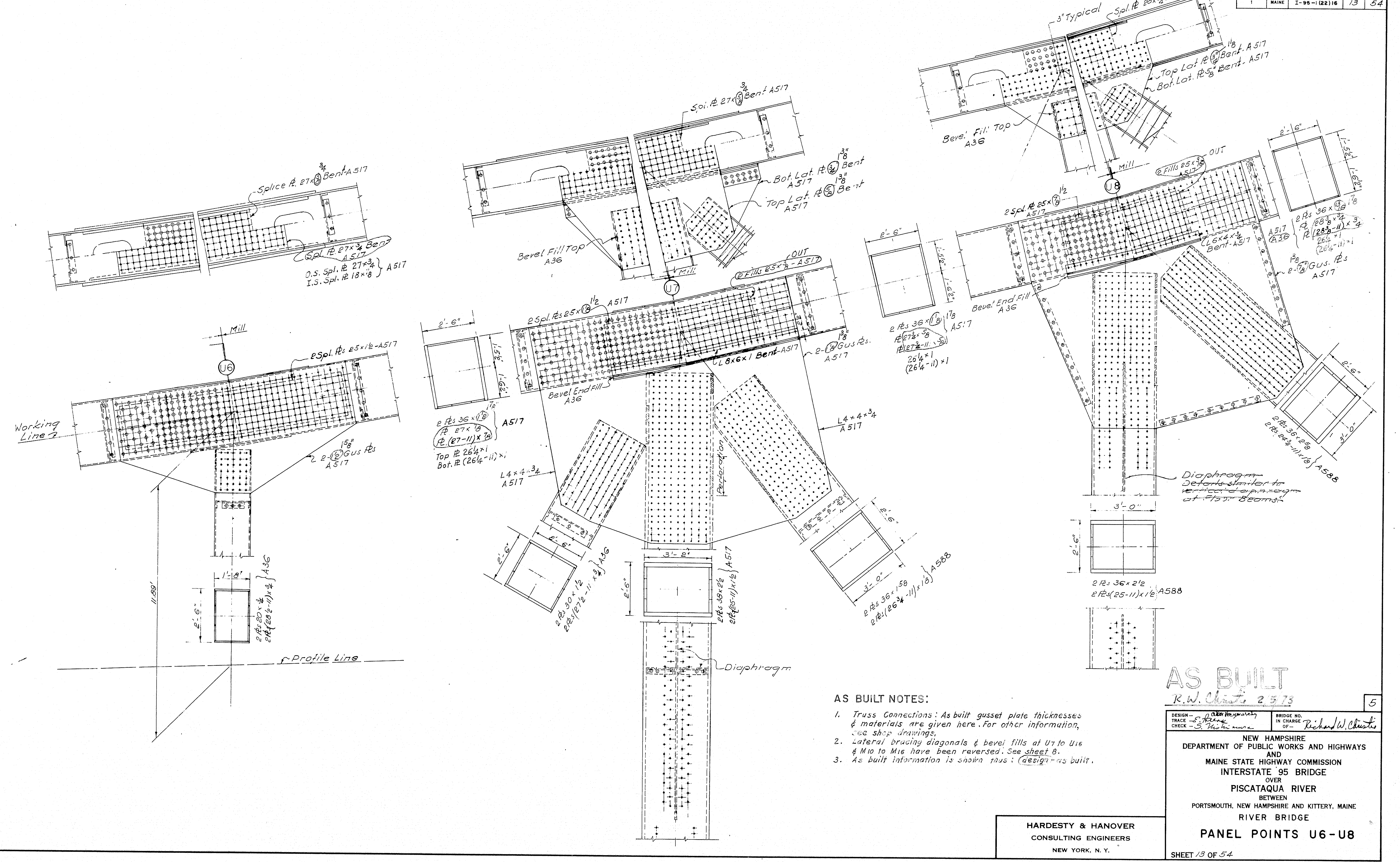

Splice PL 27×3/4 Bent A517
Spl. PL 27×3/4 Bent A517
O.S. Spl. PL 27×3/4
I.S. Spl. PL 18×7/8 A517
Mill
U6
2 Spl. PLs 25×1 1/2 - A517
Working Line
2-1 1/2 Gus PLs A517
11.88'
1'-8"
2'-6"
2 PLs 20×7/8
2 PLs (20 1/2-11)×7/8 A36
Profile Line
Spl. PL 27×3/4 Bent A517
Bot. Lat. PL 3/4 Bent A517
Top Lat. PL 5/8 Bent A517
Bevel Fill Top A36
Mill
U7
2 Fills 25×3/4 - OUT - A517
2 Spl. PLs 25×1 1/2 A517
2'-6"
2'-5 1/2"
2'-7"
2 PLs 36×1 1/2
PL 27×7/8
PL (27-11)×7/8 A517
Top PL 26 1/4×1
Bot. PL (26 1/4-11)×1
L8×6×1 Bent - A517
2-1 3/8 Gus PLs. A517
Bevel End Fill A36
L4×4×3/4 A517
L4×4×3/4 A517
Perforation
2'-6"
2'-6"
2 PLs 30×1 1/2
2 PLs (27 1/2-11)×1 1/2 A36
3'-8"
2'-6"
2 PLs 38×2 1/2
2 PLs (25-11)×1 1/2 A517
2'-6"
3'-0"
2 PLs 36×1 5/8
2 PLs (26 3/4-11)×1 1/8 A588
Diaphragm
3" Typical
Spl. PL 28×3/4 Bent A517
Top Lat. PL 3/4 Bent A517
Bot. Lat. PL 5/8 Bent A517
Bevel Fill Top A36
Mill
U8
2 Fills 25×3/4 OUT A517
2 Spl. PLs 25×1 1/2 A517
2'-6"
2'-6"
2'-5 1/2"
2 PLs 36×1 7/8
PL 27 7/8×5/8
PL (27 7/8-11)×5/8
26 1/4×1
(26 1/4-11)×1 A517
L6×4×1/2 Bent - A517
2 PLs 36×1 7/8
PL 28 3/8×3/4
PL (28 3/8-11)×3/4
26 1/4×1
(26 1/4-11)×1 A517 A36
2-1 7/8 Gus. PLs A517
Bevel End Fill A36
2'-6"
3'-0"
2 PLs 36×2 5/8
2 PLs (26 3/4-11)×1 1/8 A588
Diaphragm
~~Details similar to vertical diaphragm at Flr. Beams~~
3'-0"
2'-6"
2 PLs 36×2 1/2
2 PLs (25-11)×1 1/8 A588

AS BUILT NOTES:

1. Truss Connections: As built gusset plate thicknesses & materials are given here. For other information, see shop drawings.
2. Lateral bracing diagonals & bevel fills at U7 to U16 & M10 to M16 have been reversed. See sheet 8.
3. As built information is shown thus: (design) - as built.

AS BUILT
R.W. Christie 2/5/73

5

DESIGN – Alex Hayworsky
TRACE – E. Hearx
CHECK – S. Nishimura

BRIDGE NO.
IN CHARGE OF – Richard W. Christie

NEW HAMPSHIRE
DEPARTMENT OF PUBLIC WORKS AND HIGHWAYS
AND
MAINE STATE HIGHWAY COMMISSION
INTERSTATE 95 BRIDGE
OVER
PISCATAQUA RIVER
BETWEEN
PORTSMOUTH, NEW HAMPSHIRE AND KITTERY, MAINE
RIVER BRIDGE

PANEL POINTS U6-U8

SHEET 13 OF 54

HARDESTY & HANOVER
CONSULTING ENGINEERS
NEW YORK, N. Y.

129-108

B. P. R. REG. NO.	STATE	PROJECT NUMBER	SHEET NO.	TOTAL SHEETS
1	MAINE	I-95-1(22)16	14	54

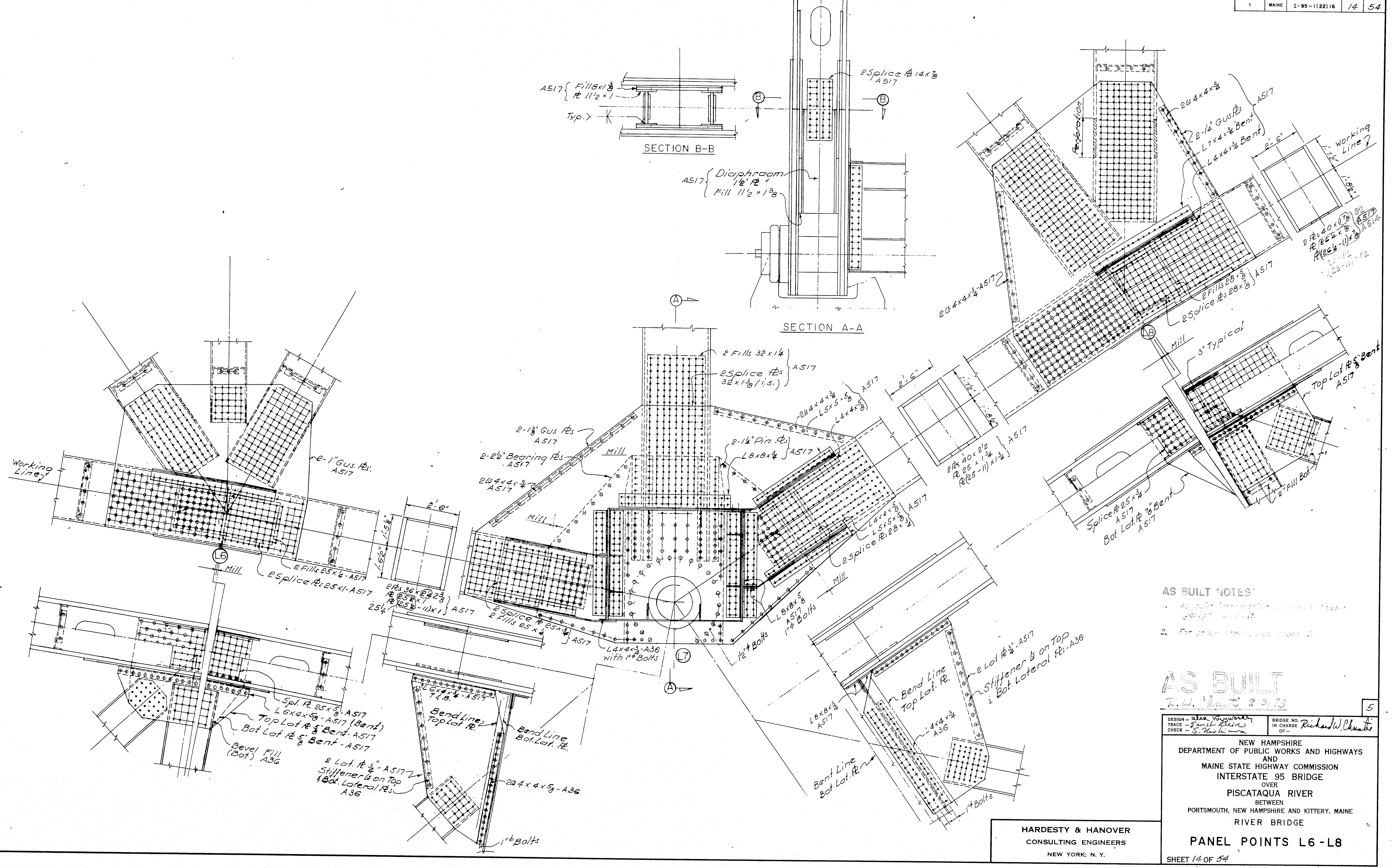

SECTION B-B
A517 { Fill 8x1 3/8, ℞ 11 1/2 x 1
Typ.
2 Splice ℞ 14 x 7/8 A517
SECTION A-A
A517 { Diaphragm 1 1/2" ℞, Fill 11 1/2 x 1 3/8
2 Fills 32 x 1 1/4 } A517
2 Splice ℞s 32 x 1 3/8 (i.s.)
2 Ls 4x4x3/4
L5x5x5/8
L4x4x5/8 A517
2-1 3/8" Gus ℞s A517
2-2 1/2" Bearing ℞s A517
2 Ls 4x4x3/4 A517
2-1 1/4" Pin ℞s
L8x8x3/4 A517
Mill
L4x4x5/8
L5x5x5/8
2 Splice ℞ 28 x 5/8
Working Line
e-1" Gus. ℞s A517
2 Fills 25 x 1/4 - A517
2 Splice ℞s 25 x 1 - A517
L6
L7
L8
2'-6"
1'-6"
2 ℞s 36 x 2 3/8
℞ 25 x 1
℞(25 - 11) x 1
25 1/4
2 Splice ℞ 25 x 3/4
2 Fills 25 x 1/4
A517
L4x4x3/4 - A36 with 1" Bolts
L8x8x5/8 A517
1" Bolts
Spl. ℞ 25 x 5/8 - A517
L6x4x5/8 - A517 (Bent)
Top Lat ℞ 5/8" Bent - A517
Bot Lat ℞ 5/8 Bent - A517
Bevel Fill (Bot) A36
L6x4x3/4 - A517
Bend Line Top Lat ℞
Bend Line Bot Lat ℞
2 Lat. ℞ 3/4" - A517
Stiffener Ls on Top & Bot Lateral ℞s A36
2 Ls 4x4x5/8 - A36
1" Bolts
2 ℞s 40 x 2 1/2
℞ 25 x 1 3/4
℞(25 - 11) x 1 3/4
2 Ls 4x4x3/4
2-1 1/4" Gus ℞s
L7x4x3/4 Bent
L4x4x3/4 Bent
Working Line
2 Fills 28 x 5/8
2 Splice ℞s 28 x 5/8
2 Ls 4x4x3/4 - A517
3" Typical
Top Lat ℞ 7/8" Bent A517
Splice ℞ 25 x 3/4 A517
Bot Lat ℞ 7/8 Bent A517
2" Fill Bot
2 Lat ℞ 3/4" - A517
Stiffener Ls on Top & Bot Lateral ℞s - A36
L8x8x3/4 A517
Bend Line Top Lat ℞
Bent Line Bot Lat ℞
L4x4x5/8 A36
1" Bolts

AS BUILT NOTES:

1. As built information is shown thus: design as built.
2. For other notes, see sheet 12.

AS BUILT
R. W. Christie 2/5/73

5

DESIGN — Alex Voysworthy
TRACE — Ernst Heir
CHECK — S. Nishimura

BRIDGE NO. IN CHARGE OF — Richard W. Christie

NEW HAMPSHIRE
DEPARTMENT OF PUBLIC WORKS AND HIGHWAYS
AND
MAINE STATE HIGHWAY COMMISSION
INTERSTATE 95 BRIDGE
OVER
PISCATAQUA RIVER
BETWEEN
PORTSMOUTH, NEW HAMPSHIRE AND KITTERY, MAINE
RIVER BRIDGE

HARDESTY & HANOVER
CONSULTING ENGINEERS
NEW YORK, N. Y.

PANEL POINTS L6 - L8

SHEET 14 OF 54

129-109

B. P. R. REG. NO.	STATE	PROJECT NUMBER	SHEET NO.	TOTAL SHEETS
1	MAINE	I-95-1(22)16	15	54

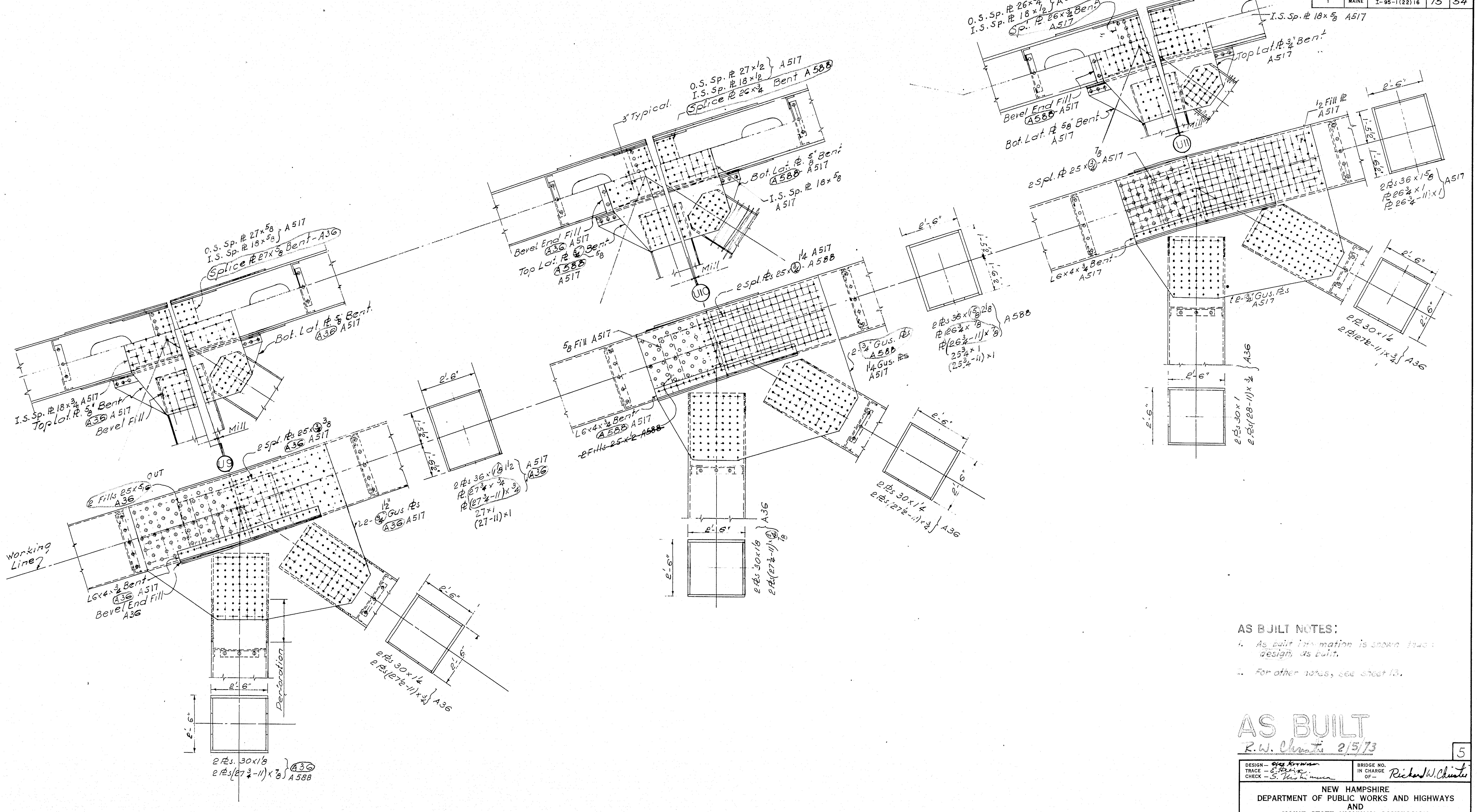

O.S. Sp. ⅊ 27×5/8 } A517
I.S. Sp. ⅊ 18×5/8
Splice ⅊ 27×5/8 Bent-A36
Bot. Lat. ⅊ 5/8" Bent. A36 A517
I.S. Sp. ⅊ 18×3/4 A517
Top Lat. ⅊ 5/8" Bent A36 A517
Bevel Fill
Mill
U9
2 Spl. ⅊s 25×3/4 3/8 A36 A517
2 Fills 25×5/16 A36
OUT
2-3/4" 1 1/2" Gus ⅊s A36 A517
Working Line
L6×4×3/4 Bent A36 A517
Bevel End Fill A36
Perforation
2'-6"
1'-5 1/2"
1'-6 1/2"
2 ⅊s 36×1 1/8 1 1/2
⅊ 27 3/4×3/4
⅊ (27 3/4-11)×3/4
27×1
(27-11)×1 } A517 A36
2 ⅊s 30×1 1/4
2 ⅊s (27 1/2-11)×3/4 } A36
2 ⅊s. 30×1 1/8
2 ⅊s (27 3/4-11)×7/8 } A36 A588
3" Typical.
O.S. Sp. ⅊ 27×1/2 } A517
I.S. Sp. ⅊ 18×1/2
Splice ⅊ 26×3/4 Bent A588
Bot. Lat. ⅊ 5/8" Bent A588 A517
I.S. Sp. ⅊ 18×5/8 A517
Bevel End Fill A36 A517
Top Lat. ⅊ 3/4" Bent 5/8 A588 A517
U10
2 Spl. ⅊s 25×3/4 1 1/4 A517 A588
5/8 Fill A517
2-3/4" Gus. ⅊s A588
1 1/4 Gus. ⅊s A517
L6×4×3/4 Bent A588 A517
~~2 Fills 25×1/2 A588~~
2 ⅊s 36×1 5/8 2 1/8
⅊ 26 3/4×7/8
⅊ (26 3/4-11)×7/8
25 3/4×1
(25 3/4-11)×1 } A588
2 ⅊s 30×1 1/8
2 ⅊s (27 3/4-11)×3/4 7/8 } A36
O.S. Sp. ⅊ 26×3/4 } A517
I.S. Sp. ⅊ 18×1/2
Sp. ⅊ 26×3/4 Bent A517
I.S. Sp. ⅊ 18×5/8 A517
Top Lat. ⅊ 3/4" Bent A517
Bevel End Fill A588 A517
Bot. Lat. ⅊ 5/8" Bent A517
U11
1/2 Fill ⅊ A517
2 Spl. ⅊ 25×3/4 7/8 A517
2 ⅊s 36×1 5/8
⅊ 26 3/4×1
⅊ 26 3/4-11×1 } A517
L6×4×3/4 Bent A517
2-3/4" Gus. ⅊s A517
2 ⅊s 30×1
2 ⅊s (28-11)×3/4 } A36
2'-6"
6"

AS BUILT NOTES:

1. As built information is shown thus: (design) as built.
2. For other notes, see sheet 13.

AS BUILT

R. W. Christie 2/5/73

5

DESIGN — Alex Krywicki
TRACE — E. Heiz
CHECK — S. Nishimura

BRIDGE NO.
IN CHARGE OF — Richard W. Christie

NEW HAMPSHIRE
DEPARTMENT OF PUBLIC WORKS AND HIGHWAYS
AND
MAINE STATE HIGHWAY COMMISSION
INTERSTATE 95 BRIDGE
OVER
PISCATAQUA RIVER
BETWEEN
PORTSMOUTH, NEW HAMPSHIRE AND KITTERY, MAINE

RIVER BRIDGE

PANEL POINTS U9 - U11

SHEET 15 OF 54

HARDESTY & HANOVER
CONSULTING ENGINEERS
NEW YORK, N.Y.

129-110

B. P. R. REG. NO.	STATE	PROJECT NUMBER	SHEET NO.	TOTAL SHEETS
1	MAINE	I-95-1(22)16	16	54

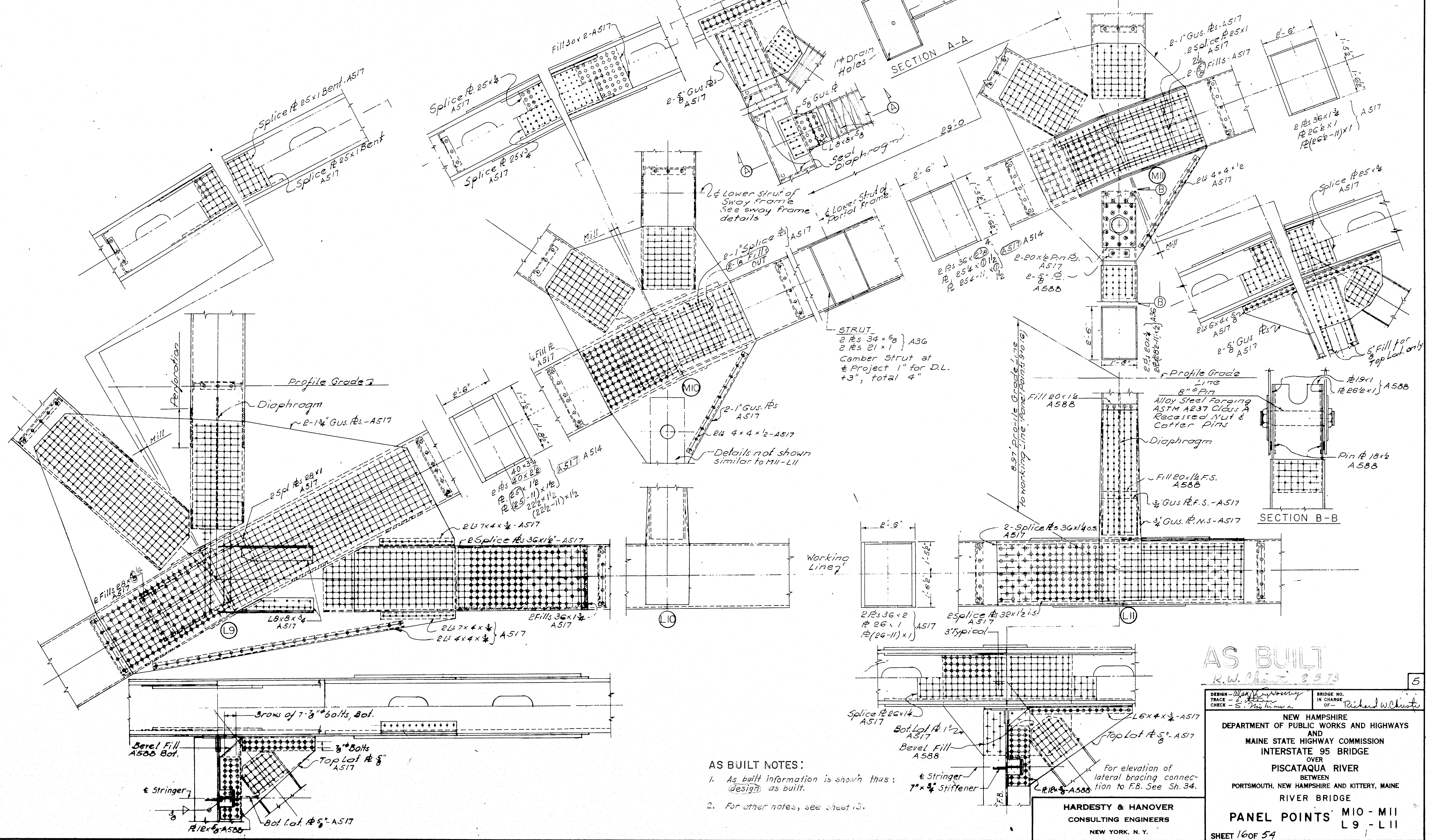

Splice ℞ 25×1 Bent - A517
Splice ℞ 25×1 Bent A517
Splice ℞ 25×¾ A517
Fill 30×2 - A517
2-⅝" Gus. ℞s A517
1"⌀ Drain Holes
⅝" Gus. ℞
L6×6×⅝
Seal Diaphragm
SECTION A-A
29'-0"
℄ Lower Strut of Sway Frame See sway frame details
℄ Lower Strut of Portal Frame
2-1" Splice ℞s A517
2-⅞" Fills OUT
2-1" Gus. ℞s - A517
2-Splice ℞s 25×1 A517
2¼" Fills - A517
2 ℞s 36×1¾
2 ℞s 26'×1
℞ (26-11)×1 } A517
2 Ls 4×4×½ A517
2-20×½ Pin ℞s A517
A514
2 ℞s 36×(2)
2 ℞s 25¼×1½
℞ 25-11×1½
Splice ℞ 25×¾ A517
2 Ls 6×4×⅝ A517
⅝" Gus ℞s A517
⅝" Fill for Top Lat. only
Mill
M11
B
M10
2'-6"
STRUT
2 ℞s 34×⅝
2 ℞s 21×1 } A36
Camber Strut at ℄ Project 1" for D.L. +3", total 4"
2-1" Gus. ℞s A517
2 Ls 4×4×½ - A517
Details not shown similar to M11-L11
Profile Grade Line
8" ⌀ Pin Alloy Steel Forging ASTM A237 Class A Recessed Nut & Cotter Pins
℞ 19×1
℞ 26'×1 } A588
Pin ℞ 18×½ A588
SECTION B-B
8.97' Profile Grade Line to Working Line (Panel Points 9,10,11)
Fill 20×1½ A588
Diaphragm
Fill 20×1½ F.S. A588
¾ Gus ℞ F.S. - A517
¾ Gus. ℞ N.S - A517
Perforation
Profile Grade
Diaphragm
2-1¾" Gus. ℞s - A517
2 Spl ℞s 28×1 A517
2 ℞s 40×3¾
2 ℞s 40×2½
℞ (25-11)×1½
℞ 22½-11×1½
A517 A514
¼ Fill ℞ A517
2 Ls 7×4×¾ - A517
2 Splice ℞s 36×1½ - A517
2 Fills 28×1 A517
L8×8×¾ A517
2 Ls 7×4×¾
2 Ls 4×4×¾ } A517
2 Fills 36×1¾ A517
L9
L10
L11
Working Line
2-Splice ℞s 36×1¼ O.S. A517
2 Splice ℞s 32×1½ I.S.
2 ℞s 36×2
℞ 26×1
℞ (26-11)×1 } A517
3" Typical
2'-5"
1'-5½"
3 rows of 7-⅞"⌀ bolts, Bot.
Bevel Fill A588 Bot.
⅞"⌀ Bolts
Top Lat ℞ ⅝" A517
℄ Stringer
℞ 12×⅜ A588
Bot. Lat. ℞ ⅝" - A517
Splice ℞ 26×1¼ A517
Bot Lat. ℞ 1½ A517
Bevel Fill A588
℄ Stringer
7"×¾" Stiffener
F.B.
L6×4×¾ - A517
Top Lat ℞ ⅝" - A517
℞ 12×⅜ - A588
For elevation of lateral bracing connection to F.B. See Sh. 34.

AS BUILT NOTES:

1. As built information is shown thus: (design) as built.
2. For other notes, see sheet 13.

AS BUILT
R.W. Christie 2 5 73

5

DESIGN – Alex Krywoseley
TRACE – S. Stern
CHECK – S. Mishimura

BRIDGE NO. IN CHARGE OF – Richard W. Christie

NEW HAMPSHIRE
DEPARTMENT OF PUBLIC WORKS AND HIGHWAYS
AND
MAINE STATE HIGHWAY COMMISSION
INTERSTATE 95 BRIDGE
OVER
PISCATAQUA RIVER
BETWEEN
PORTSMOUTH, NEW HAMPSHIRE AND KITTERY, MAINE

RIVER BRIDGE

PANEL POINTS M10 - M11
L9 - L11

SHEET 16 OF 54

HARDESTY & HANOVER
CONSULTING ENGINEERS
NEW YORK, N. Y.

129-111

B. P. R. REG. NO.	STATE	PROJECT NUMBER	SHEET NO.	TOTAL SHEETS
1	MAINE	I-95-1 (22) 16	17	54

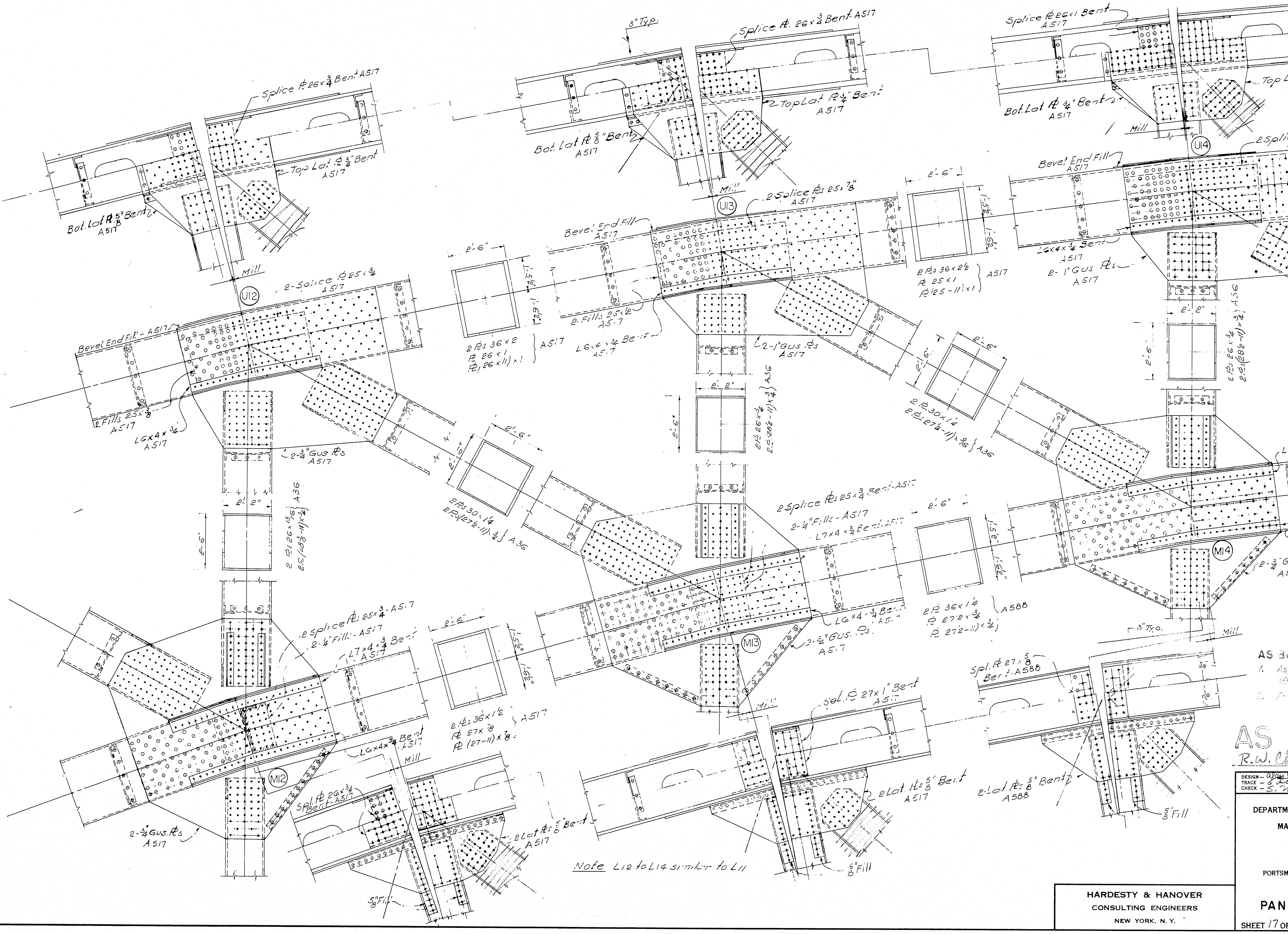

Splice PL 26x3/4 Bent A517
2-Top Lat PL 3/4" Bent A517
Bot. Lat PL 5/8" Bent A517
Mill
U12
2-Splice PL 25x3/4 A517
Bevel End Fill - A517
2 Fills 25x3/8 A517
L6x4x3/4 A517
2-3/4" Gus PLs A517
2 PLs 36x2
PL 26x1
PL (26x11)x1 A517
2'-6"
2'-2"
2 PLs 26x13/16
2 PLs (28 3/8-11)x3/4 A36
2 PLs 30x1 1/4
2 PLs (27 3/8-11)x3/4 A36
3" Typ.
Splice PL 26x3/4 Bent A517
2-Top Lat PL 3/4" Bent A517
Bot. Lat PL 5/8" Bent A517
U13
2 Splice PLs 25x7/8
Bevel End Fill A517
2-Fills 25x1/8
L6x4x3/4 Bent A517
2-1" Gus PLs A517
2 PLs 26x1/2
2 PLs (28 3/8-11)x3/4 A36
2 PLs 30x1 1/4
2 PLs (27 3/8-11)x3/8 A36
2 PLs 36x2 1/2
PL 25x1
PL (25-11)x1 A517
Splice PL 26x1 Bent A517
Top Lat PL 1" Bent A517
Bot. Lat PL 3/4" Bent A517
U14
2 Splice PLs 25x1 A517
Bevel End Fill A517
L6x4x3/4 Bent A517
2- 1" Gus PLs A517
2 PLs 36x2 1/2
PL 25x1 1/2
PL (25-11)x1/2 A517
2 PLs 26x3/4
2 PLs (28 3/8-11)x3/4 A36
2 PLs 30x3/4
2 PLs (28 3/8-11)x5/8 A36
2 Splice PLs 25x3/4 Bent A517
2-1/4" Fills - A517
L7x4x3/4 Bent A517
2 PLs 36x1 1/4
PL 27 1/2x3/4
PL (27 1/2-11)x3/4 A588
L6x4x3/4 Bent
2-3/4" Gus. PLs A517
M13
L7x4x3/4 Bent A588
L6x4x3/4 Bent A588
M14
2-3/4" Gus. PLs A588
2 PLs 36x7/8
PL 28 1/4x3/4
PL (28 1/4-11)x3/4 A36
2 splice PL 25x3/4 - A517
2-1/4" Fills - A517
L7x4x3/4 Bent A517
2 PLs 36x1 1/2
PL 27x7/8
PL (27-11)x7/8 A517
L6x4x3/4 Bent A517
M12
2-3/4" Gus. PLs A517
Spl PL 26x3/4 Bent A517
2 Lat PL 5/8" Bent A517
5/8" Fill
Spl. PL 27x1" Bent A517
2 Lat PLs 5/8" Bent A517
5/8" Fill
Spl. PL 27x5/8 Bent A588
2-Lat PL 5/8" Bent A588
5/8" Fill
3" Typ.
Mill

Note L12 to L14 similar to L11

AS BUILT NOTES:

1. As built information is shown thus: ~~design~~ as built.
2. For other notes, see sheet 14.

AS BUILT
R.W. Christie 8/5/73

5

DESIGN – Alex Krzywoszyk
TRACE – E. Allen
CHECK – S. Mishima

BRIDGE NO.
IN CHARGE OF – Richard W. Christie

NEW HAMPSHIRE
DEPARTMENT OF PUBLIC WORKS AND HIGHWAYS
AND
MAINE STATE HIGHWAY COMMISSION
INTERSTATE 95 BRIDGE
OVER
PISCATAQUA RIVER
BETWEEN
PORTSMOUTH, NEW HAMPSHIRE AND KITTERY, MAINE
RIVER BRIDGE

PANEL POINTS U12 - U14, M12 - M14

SHEET 17 OF 54

HARDESTY & HANOVER
CONSULTING ENGINEERS
NEW YORK, N. Y.

129-112

B. P. R. REG. NO.	STATE	PROJECT NUMBER	SHEET NO.	TOTAL SHEETS
1	MAINE	I-95-1 (22) 16	18	54

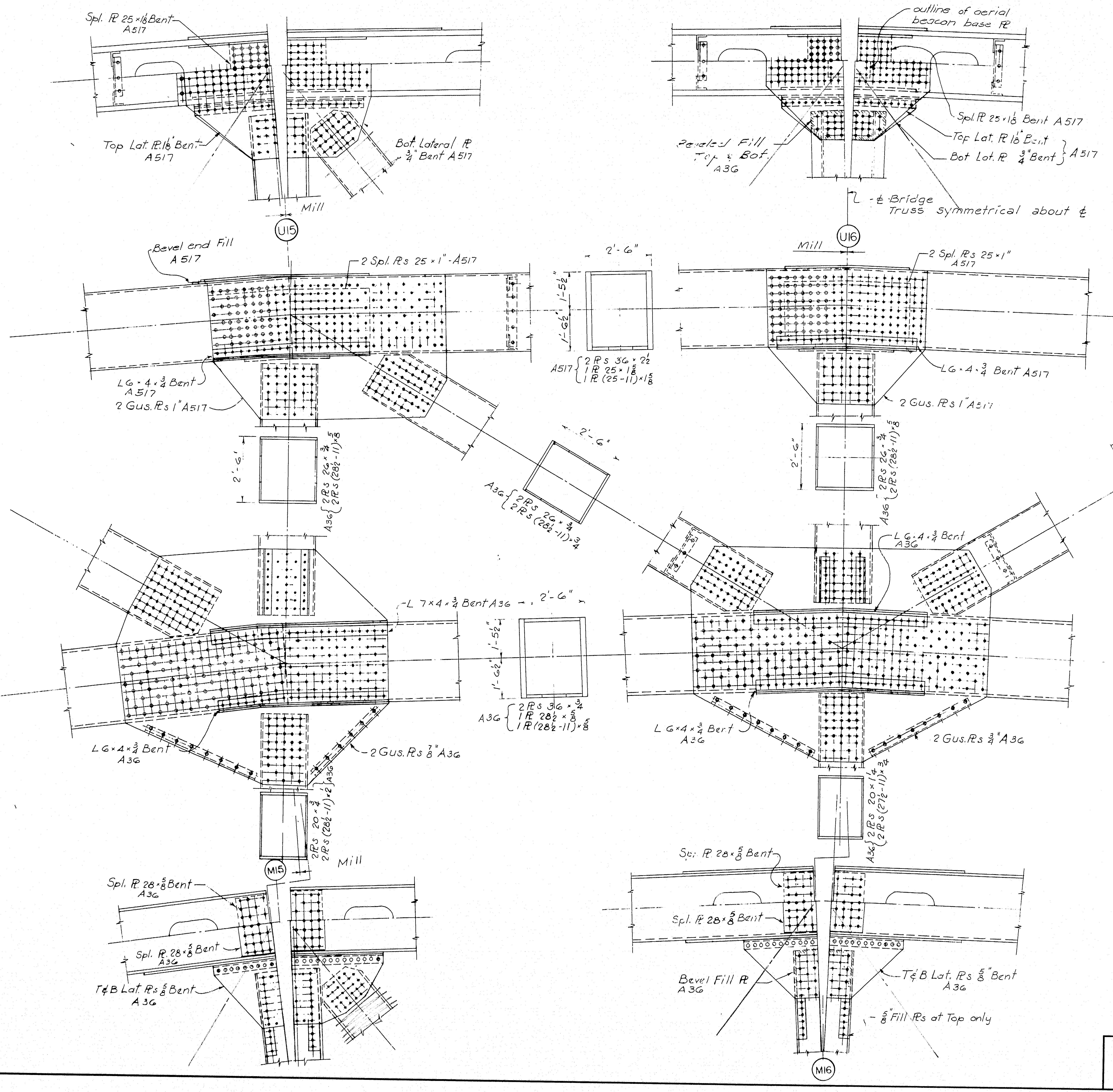

Spl. ℙ 25×1⁄16 Bent A517
Top Lat. ℙ 1⁄16" Bent A517
Bot. Lateral ℙ 3⁄4" Bent A517
Mill
U15
outline of aerial beacon base ℙ
Beveled Fill Top & Bot. A36
Spl. ℙ 25×1⁄16 Bent A517
Top Lat. ℙ 1⁄16 Bent
Bot Lat. ℙ 3⁄4" Bent } A517
℄ Bridge Truss symmetrical about ℄
U16
Bevel end Fill A517
2 Spl. ℙs 25×1" A517
2'-6"
1'-5½"
1'-6½"
A517 { 2 ℙs 36×2½ 1 ℙ 25×1⅛ 1 ℙ (25-11)×1⅝
LG×4×3⁄4 Bent A517
2 Gus. ℙs 1" A517
Mill
2 Spl. ℙs 25×1" A517
LG×4×3⁄4 Bent A517
2 Gus. ℙs 1" A517
2'-6"
A36 { 2 ℙs 26×3⁄4 2 ℙs (28½-11)×⅝
A36 { 2 ℙs 26×3⁄4 2 ℙs (28½-11)×3⁄4
LG×4×3⁄4 Bent A36
L 7×4×3⁄4 Bent A36
A36 { 2 ℙs 36×3⁄4 1 ℙ 28½×⅝ 1 ℙ (28½-11)×⅝
LG×4×3⁄4 Bent A36
2 Gus. ℙs 7⁄8" A36
2 Gus. ℙs 3⁄4" A36
A36 { 2 ℙs 20×3⁄4 2 ℙs (28½-11)×⅝
A36 { 2 ℙs 20×1¼ 2 ℙs (27½-11)×3⁄4
Mill
M15
Spl. ℙ 28×⅝ Bent A36
Spl. ℙ 28×⅝ Bent A36
T&B Lat. ℙs ⅝ Bent A36
Spl. ℙ 28×⅝ Bent
Spl. ℙ 28×⅝ Bent
Bevel Fill ℙ A36
T&B Lat. ℙs ⅝" Bent A36
⅝" Fill ℙs at Top only
M16

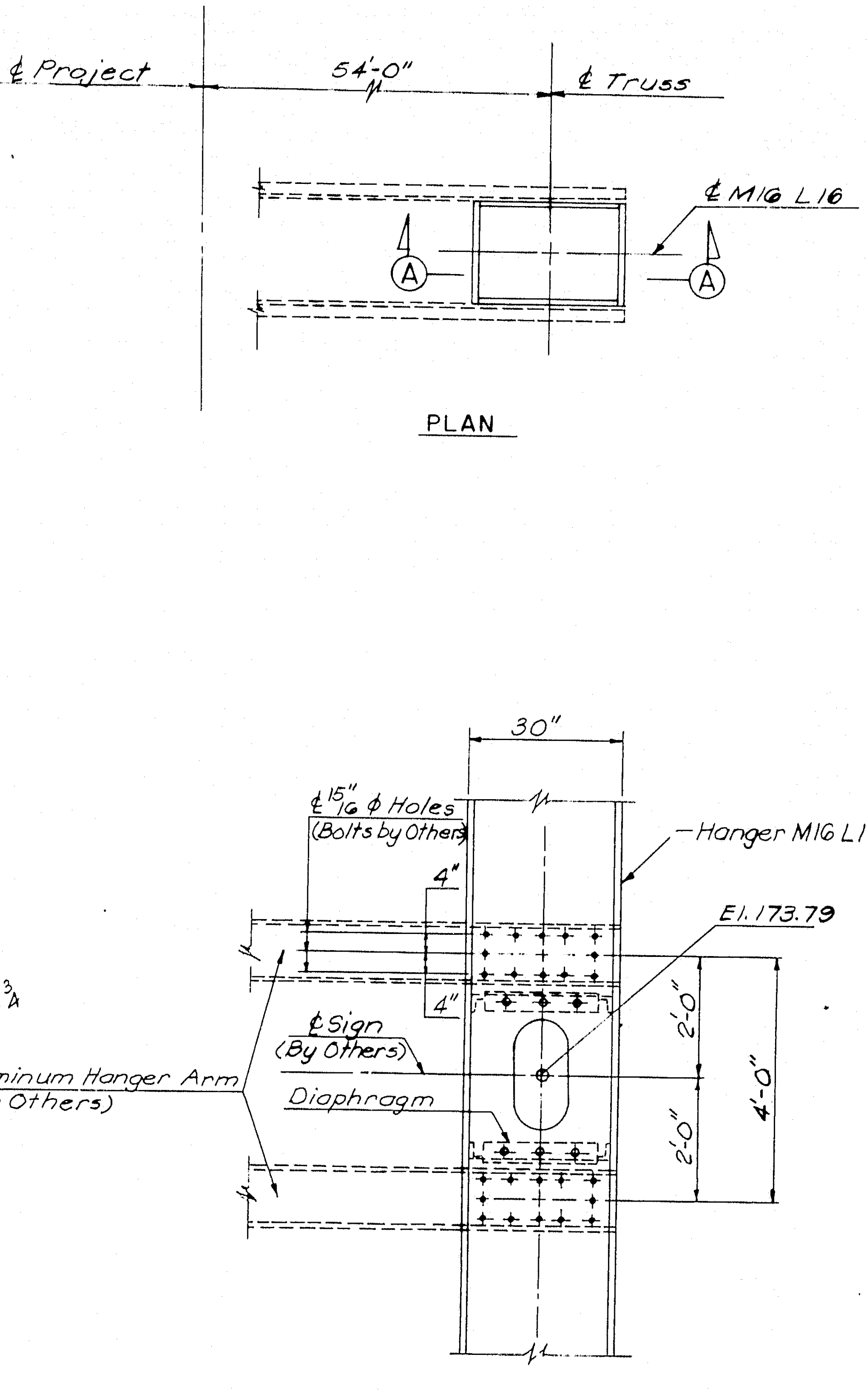

℄ Project
54'-0"
℄ Truss
℄ M16 L16
A
A
PLAN
30"
℄ 15⁄16" ⌀ Holes (Bolts by Others)
Hanger M16 L16
4"
El. 173.79
4"
℄ Sign (By Others)
2'-0"
4'-0"
2'-0"
Aluminum Hanger Arm (By Others)
Diaphragm

SECTION A-A

HANGERS M16 L16 AT
SIGN SUPPORTS

Scale: ½" = 1'-0"

AS BUILT NOTES:

1. As built information is shown thus: ~~design~~ as built.
2. For other notes, see sheet 13.

AS BUILT
R. W. Christie 2/5/73

5

DESIGN – Alex Kreywoschy
TRACE – a. N.
CHECK – S. Michimura

BRIDGE NO.
IN CHARGE OF – Richard W Christie

NEW HAMPSHIRE
DEPARTMENT OF PUBLIC WORKS AND HIGHWAYS
AND
MAINE STATE HIGHWAY COMMISSION
INTERSTATE 95 BRIDGE
OVER
PISCATAQUA RIVER
BETWEEN
PORTSMOUTH, NEW HAMPSHIRE AND KITTERY, MAINE
RIVER BRIDGE

PANEL POINTS U15 - U16
M15 - M16

SHEET 18 OF 54

HARDESTY & HANOVER
CONSULTING ENGINEERS
NEW YORK, N. Y.

129-113

B. P. R. REG. NO.	STATE	PROJECT NUMBER	SHEET NO.	TOTAL SHEETS
1	MAINE	I-95-1 (22) 16	19	54

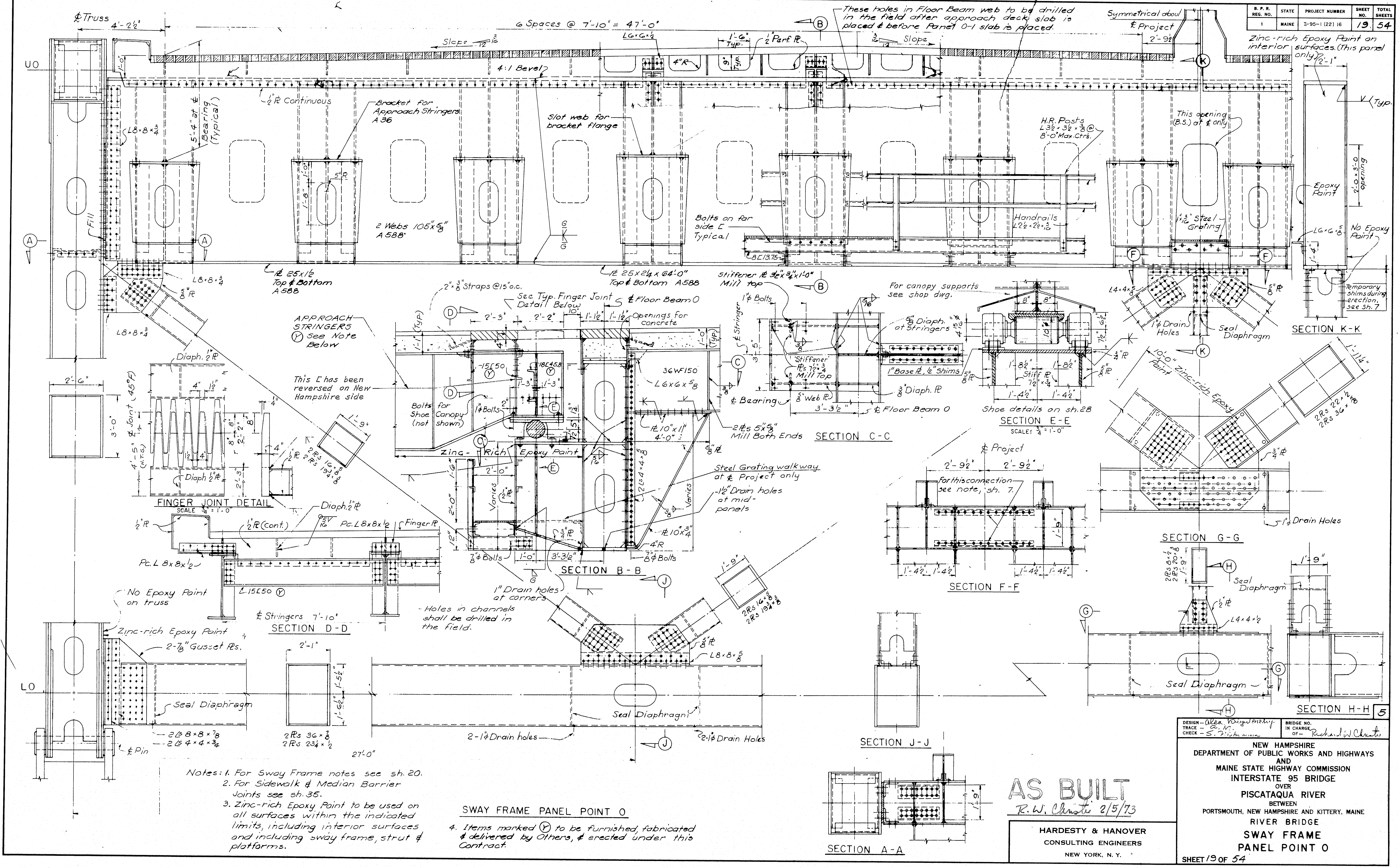

℄ Truss
4'-2½"
6 Spaces @ 7'-10" = 47'-0"
Slope 3/12
L6×6×½
1'-6" Typ.
½ Parf. ℞
These holes in Floor Beam web to be drilled in the field after approach deck slab is placed & before Panel 0-1 slab is placed.
Slope 3/12
Symmetrical about ℄ Project
2'-9½"
Zinc-rich Epoxy Paint on interior surfaces. (This panel only)
2'-1"
V Typ.
U0
4:1 Bevel
½ ℞ Continuous
Bracket for Approach Stringers A36
5'-4" at ℄ Bearing (Typical)
L8×8×¾
Slot web for bracket flange
H.R. Posts L3½×3½×⅜ @ 8'-0" Max Ctrs.
This opening (B.S.) at ℄ only
2'-0"×3'-0" opening
Epoxy Paint
2 Webs 105"×⅝" A588
Bolts on far side E Typical
Handrails L2½×2½×½
1¼" Steel Grating
L6×6×⅝
No Epoxy Paint
Temporary shims during erection, see Sh. 7
Fill
℞ 25×1½ Top & Bottom A588
℞ 25×2¼×84'-0" Top & Bottom A588
BC13.75
L8×8×¾
⅝ ℞
L4×4×½
1" Drain Holes
Seal Diaphragm
SECTION K-K
Stiffener ℞ 9½"×¾"×1'-0" Mill top
1¼ Bolts
℄ Stringer
For canopy supports see shop dwg.
2"×⅜" Straps @ 15" o.c.
See Typ. Finger Joint Detail Below
℄ Floor Beam 0
Openings for concrete
APPROACH STRINGERS Ⓨ See Note Below
This ℄ has been reversed on New Hampshire side
Bolts for Shoe Canopy (not shown)
15C50 Ⓨ
18C45.8 Ⓨ
36WF150
L6×6×⅝
℞ 10"×1" 4'-0"
2 ℞s 5"×⅜" Mill Both Ends
Stiffener ℞s 7½×¾ Mill Top
⅝ Diaph. at Stringers
1" Base ℞, ½" Shims
⅜ Web ℞
⅜ Diaph. ℞
℄ Bearing
℄ Floor Beam 0
3'-3½"
SECTION C-C
Shoe details on sh. 28
SECTION E-E
SCALE: ¾" = 1'-0"
10'-0" Point
Zinc-rich Epoxy
1'-11½"
2 ℞s 22½×⅞
2 ℞s 36×⅞
Diaph. ½ ℞
Diaph. ½ ℞
FINGER JOINT DETAIL
SCALE ¾" = 1'-0"
Zinc-Rich Epoxy Paint
Varies
Steel Grating walkway at ℄ Project only
1½" Drain holes at mid-panels
℞ 10×¾
⅞ Bolts
SECTION B-B
1" Drain holes at corners
Holes in channels shall be drilled in the field.
℄ Project
2'-9½"
For this connection see note, sh. 7.
SECTION F-F
SECTION G-G
1½ Drain Holes
½ ℞ (cont.)
Pc. L8×8×½
Finger ℞
Pc. L 8×8×½
15C50 Ⓨ
℄ Stringers 7'-10"
SECTION D-D
2'-1"
2 ℞s 36×⅞
2 ℞s 23¼×½
No Epoxy Paint on truss
Zinc-rich Epoxy Paint
2-⅞" Gusset ℞s.
L8×8×⅝
Seal Diaphragm
Seal Diaphragm
2 Ls 8×8×⅞
2 Ls 4×4×¾
℄ Pin
L0
27'-0"
2-1½ Drain holes
2-1½ Drain Holes
SECTION J-J
L4×4×½
Seal Diaphragm
SECTION H-H
5
SECTION A-A

Notes: 1. For Sway Frame notes see sh. 20.
2. For Sidewalk & Median Barrier Joints see sh. 35.
3. Zinc-rich Epoxy Paint to be used on all surfaces within the indicated limits, including interior surfaces and including sway frame, strut & platforms.

SWAY FRAME PANEL POINT 0

4. Items marked Ⓨ to be furnished, fabricated & delivered by Others, & erected under this Contract.

AS BUILT
R. W. Christie 2/5/73

HARDESTY & HANOVER
CONSULTING ENGINEERS
NEW YORK, N. Y.

DESIGN – Alex Voigt Ardley
TRACE – a. N.
CHECK – S. Mishmovia

BRIDGE NO.
IN CHARGE OF – Richard W. Christie

NEW HAMPSHIRE
DEPARTMENT OF PUBLIC WORKS AND HIGHWAYS
AND
MAINE STATE HIGHWAY COMMISSION
INTERSTATE 95 BRIDGE
OVER
PISCATAQUA RIVER
BETWEEN
PORTSMOUTH, NEW HAMPSHIRE AND KITTERY, MAINE
RIVER BRIDGE
SWAY FRAME
PANEL POINT 0
SHEET 19 OF 54

129-114

B. P. R. REG. NO.	STATE	PROJECT NUMBER	SHEET NO.	TOTAL SHEETS
1	MAINE	I-95-1 (22)16	20	54

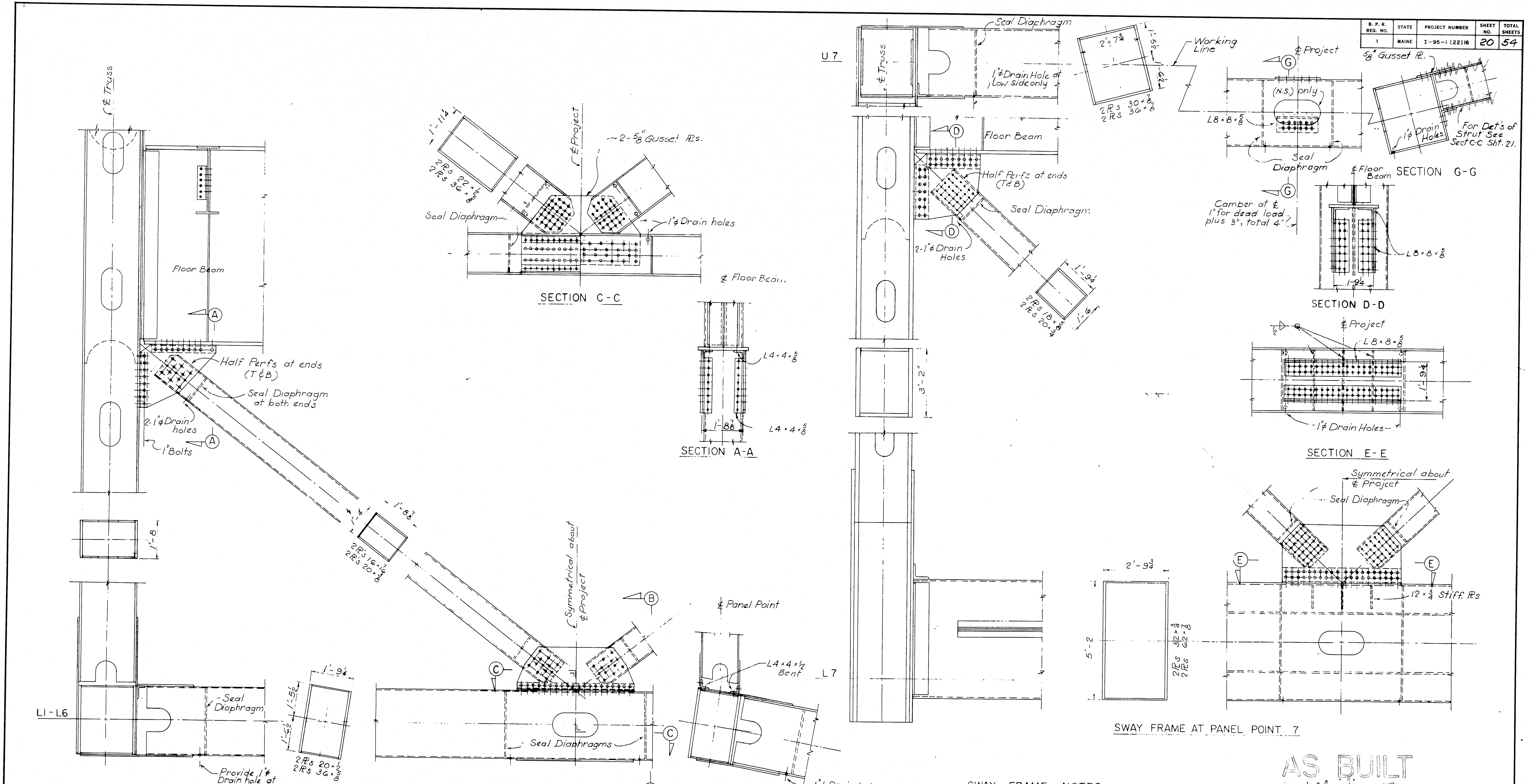

℄ Truss
Floor Beam
A
Half Perfs at ends (T&B)
Seal Diaphragm at both ends
2-1"⌀ Drain holes
1" Bolts
1'-8
1'-4
1'-8 7/8
2 Pℓs 16 × 1/2
2 Pℓs 20 × 5/8
L1-L6
Seal Diaphragm
Provide 1"⌀ Drain hole at Low side only
1'-9 1/4
1'-5 1/2
1'-6 1/2
2 Pℓs 20 × 1/2
2 Pℓs 36 × 5/8
Symmetrical about ℄ Project
B
C
Seal Diaphragms
℄ Panel Point
L4 × 4 × 1/2 Bent
L7
1"⌀ Drain holes
1'-11 1/4
2 Pℓs 22 × 1/2
2 Pℓs 36 × 5/8
℄ Project
2-5/8" Gusset Pℓs.
Seal Diaphragm
1"⌀ Drain holes
℄ Floor Beam
L4 × 4 × 5/8
1'-8 7/8
L4 × 4 × 5/8
U7
℄ Truss
Seal Diaphragm
1"⌀ Drain Hole at Low side only
Floor Beam
D
Half Perfs at ends (T&B)
Seal Diaphragm
2-1"⌀ Drain Holes
1'-9 1/4
1'-6
2 Pℓs 18 × 5/8
2 Pℓs 20 × 3/4
3'-2"
2'-7 3/4
1'-5 1/2
1'-6 1/2
2 Pℓs 30 × 7/8
2 Pℓs 36 × 7/8
Working Line
℄ Project
G
(N.S.) only
L8 × 8 × 5/8
Seal Diaphragm
Camber at ℄ 1" for dead load plus 3", total 4"
5/8" Gusset Pℓ.
1"⌀ Drain Holes
For Det's of Strut See Sect C-C Sht. 21.
℄ Floor Beam
L8 × 8 × 5/8
1'-9 1/4
℄ Project
L8 × 8 × 5/8
1/2
1'-9 1/4
1"⌀ Drain Holes
Symmetrical about ℄ Project
Seal Diaphragm
E
12 × 3/4 Stiff. Pℓs
2'-9 3/4
5'-2
2 Pℓs 32 × 3/4
2 Pℓs 62 × 7/8
L7

SECTION C-C

SECTION A-A

SECTION B-B

SWAY FRAMES AT PANEL POINTS 1 THRU 6

SECTION G-G

SECTION D-D

SECTION E-E

SWAY FRAME AT PANEL POINT 7

SWAY FRAME NOTES

1. Sway Frames, Struts, and their connections are A36 unless noted.
2. Bolts shown are 7/8" except that connection angles bolted to truss have 1" bolts on both legs.
3. Sway Frame gusset plates are 1/2" unless noted.

AS BUILT
R. W. Christie 2/5/73

5

DESIGN – Alex Krzywosky
TRACE – A. N.
CHECK – S. Nishimura

BRIDGE NO.
IN CHARGE OF – Richard W Christie

NEW HAMPSHIRE
DEPARTMENT OF PUBLIC WORKS AND HIGHWAYS
AND
MAINE STATE HIGHWAY COMMISSION
INTERSTATE 95 BRIDGE
OVER
PISCATAQUA RIVER
BETWEEN
PORTSMOUTH, NEW HAMPSHIRE AND KITTERY, MAINE
RIVER BRIDGE
SWAY FRAMES
PANEL POINTS 1 - 7
SHEET 20 OF 54

HARDESTY & HANOVER
CONSULTING ENGINEERS
NEW YORK, N. Y.

129-115

B. P. R. REG. NO.	STATE	PROJECT NUMBER	SHEET NO.	TOTAL SHEETS
1	MAINE	I-95-1(22)16	21	54

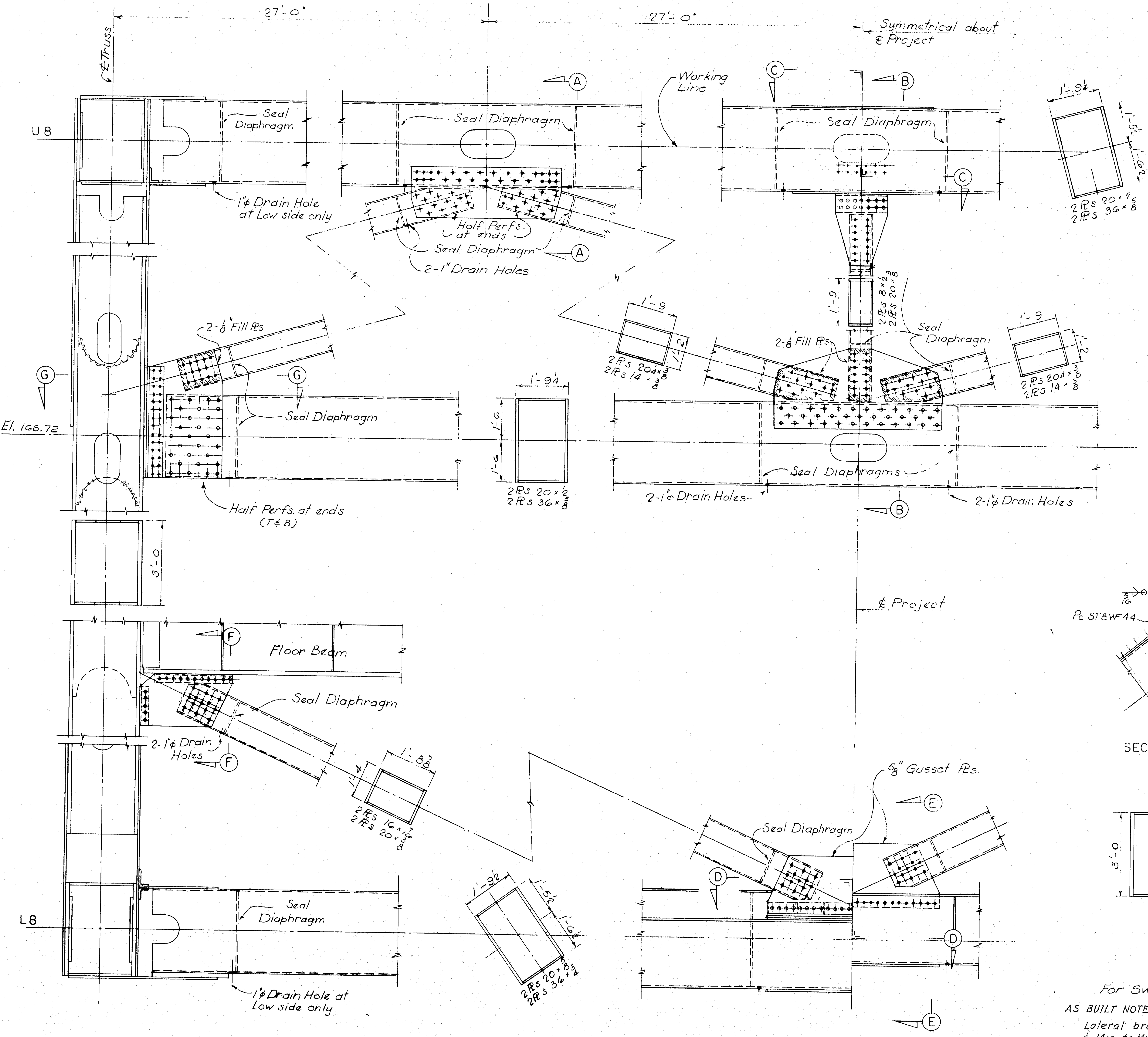
27'-0"
27'-0"
℄ Truss
Symmetrical about ℄ Project
Working Line
U8
Seal Diaphragm
1¼ Drain Hole at Low side only
Seal Diaphragm
Half Perfs. at ends
Seal Diaphragm
2-1" Drain Holes
A
B
C
1'-9¼
1'-5½
1'-6½
2 Pls 20 × 7/16
2 Pls 36 × 5/8
1'-9
2-⅛" Fill Pls
2-⅛" Fill Pls
Seal Diaphragm
2 Pls 8 × ½
2 Pls 20 × ⅜
1'-2
2 Pls 20¼ × ⅜
2 Pls 14 × ⅜
1'-9
2 Pls 20¼ × ⅜
2 Pls 14 × ⅜
G
El. 168.72
Seal Diaphragm
Half Perfs. at ends (T & B)
1'-9¼
1'-6
1'-6
2 Pls 20 × ½
2 Pls 36 × ⅝
Seal Diaphragms
2-1¼ Drain Holes
2-1¼ Drain Holes
℄ Project
3'-0
F
Floor Beam
Seal Diaphragm
2-1¼ Drain Holes
1'-8⅞
1'-4
2 Pls 16 × ½
2 Pls 20 × ⅝
⅝" Gusset Pls.
Seal Diaphragm
D
E
1'-9½
1'-5½
1'-6½
2 Pls 20 × ⅜
2 Pls 36 × ⅝
L8
Seal Diaphragm
1¼ Drain Hole at Low side only

SWAY FRAME PANEL POINT 8

For Sway Frame Notes see sheet 20

AS BUILT NOTE:

Lateral bracing diagonals U7 to U16 & M10 to M16 have been reversed. See sh. 8.

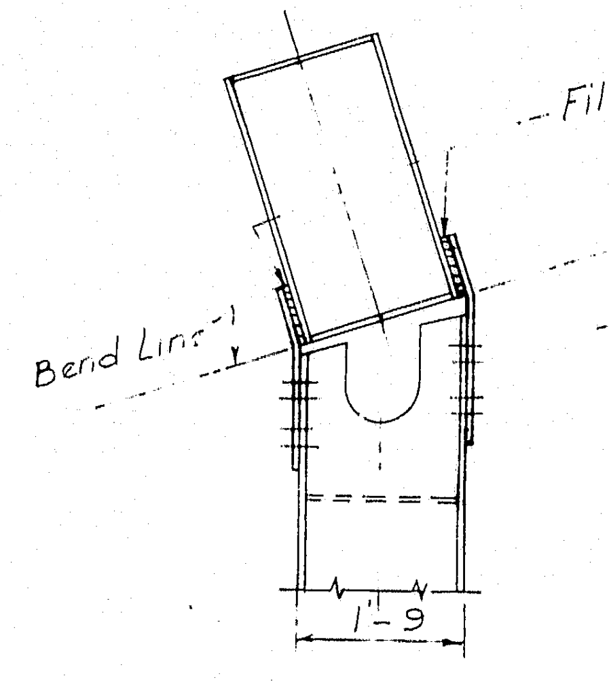
Bend Line
Fill Pl
1'-9

SECTION A-A

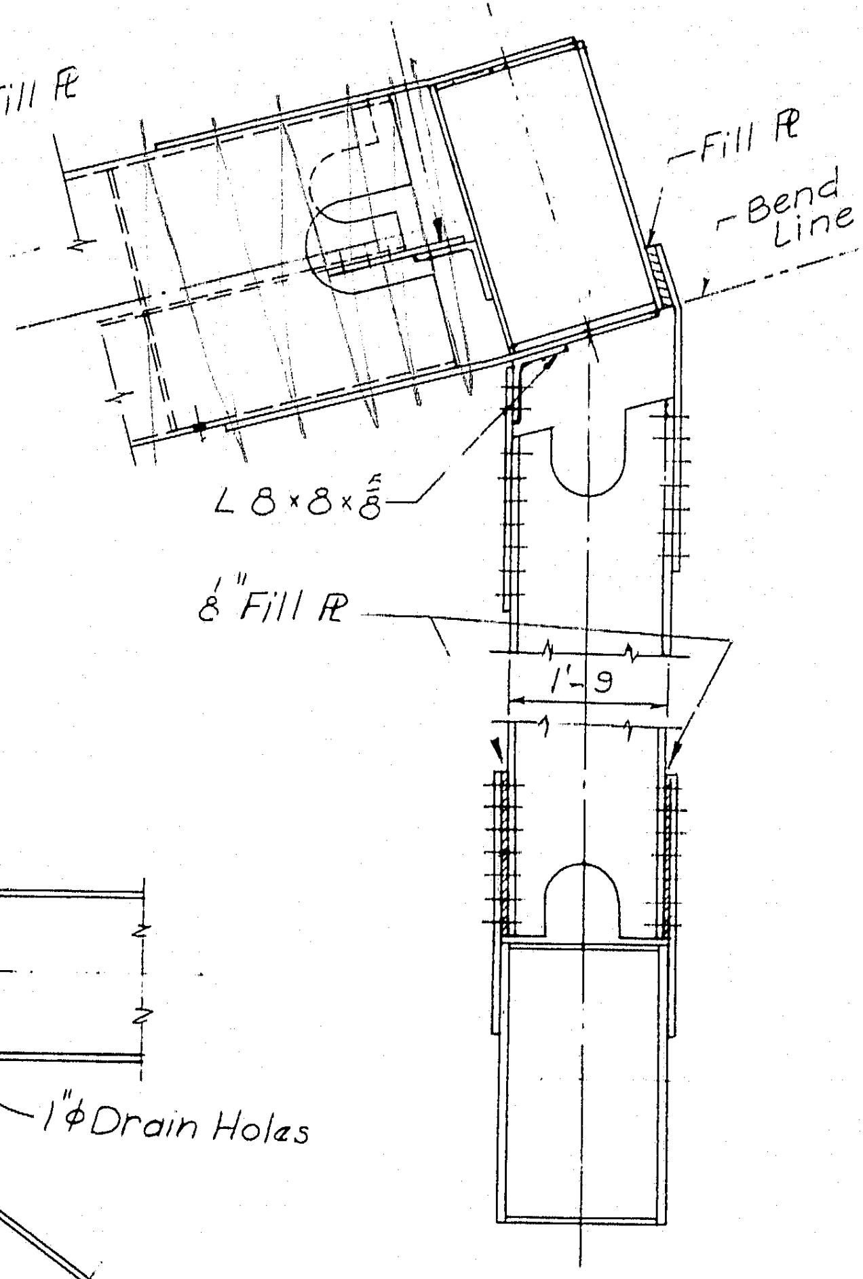
⅝" Gusset Pl ℄
∠ 8 × 8 × ⅝
Fill Pl
Bend Line
L 8 × 8 × ⅝
⅛" Fill Pl
1'-9

SECTION B-B

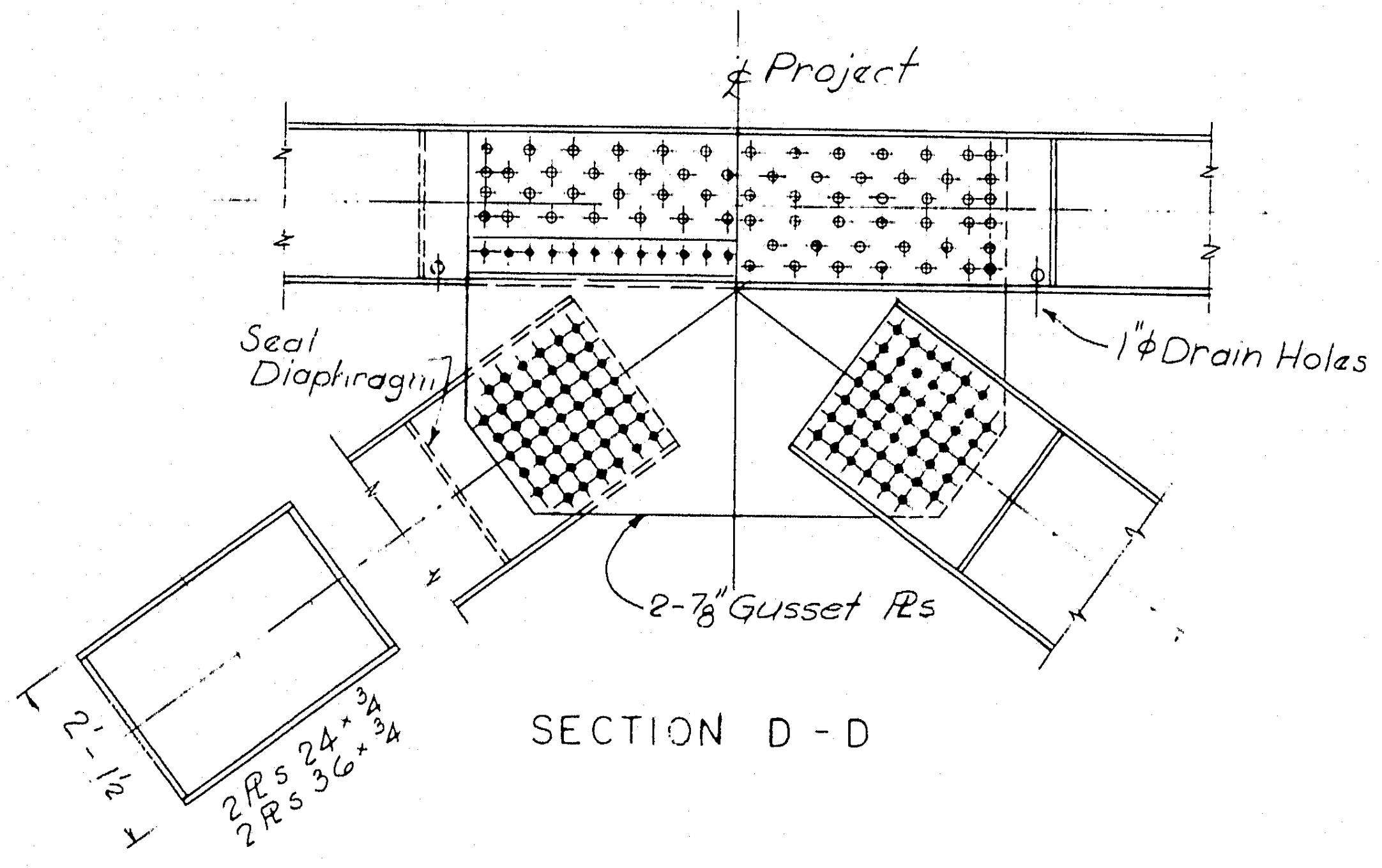
℄ Project
Seal Diaphragm
1¼ Drain Holes
2-7/16" Gusset Pls
2'-1½
2 Pls 24 × 7/16
2 Pls 36 × ¾

SECTION D-D

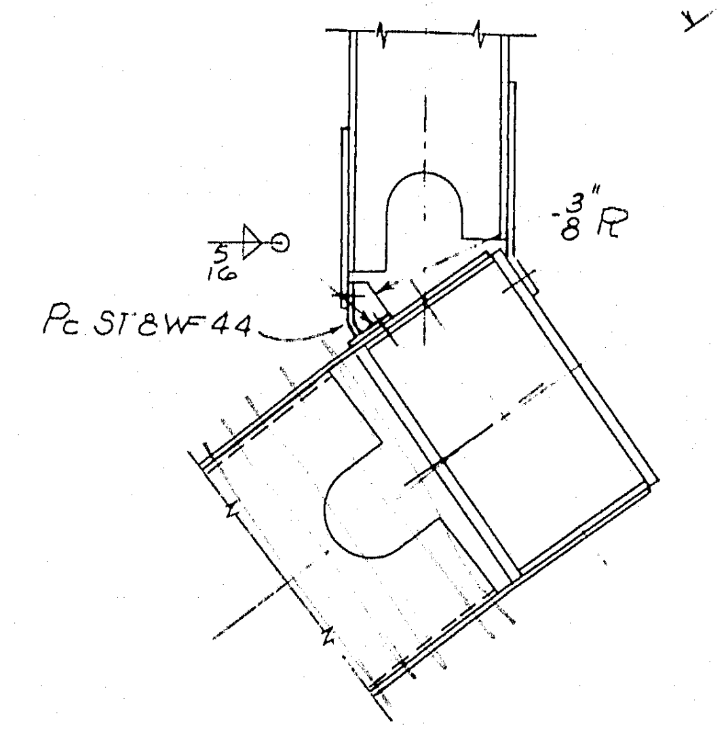
⅜ R
Pc ST8WF44
2-⅝" Gusset Pls

SECTION E-E

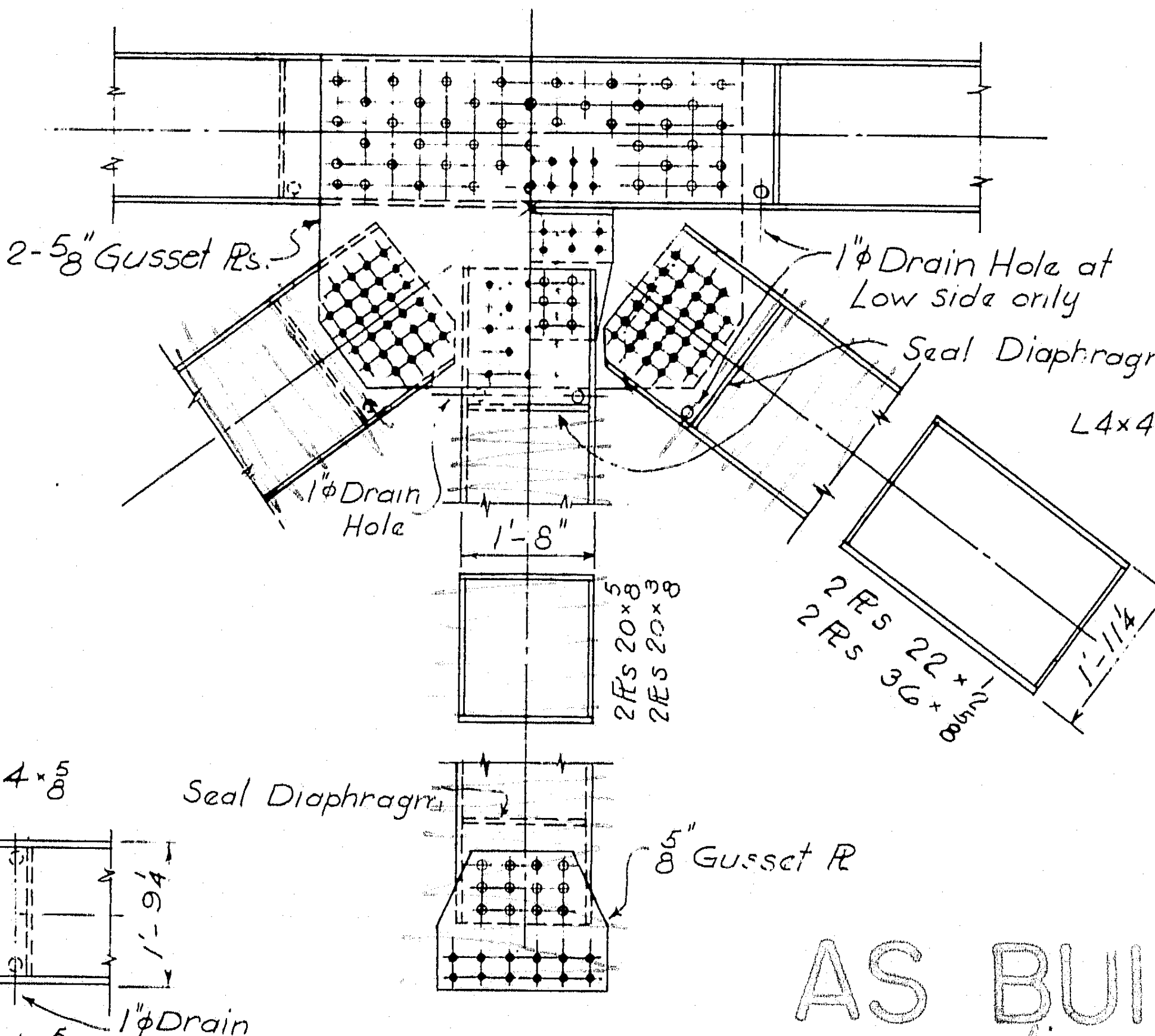
1¼ Drain Hole at Low side only
Seal Diaphragm
1¼ Drain Hole
1'-8"
2 Pls 20 × ⅝
2 Pls 20 × ⅜
2 Pls 22 × ½
2 Pls 36 × ⅝
1'-11¼
Seal Diaphragm
⅝" Gusset Pl

SECTION C-C

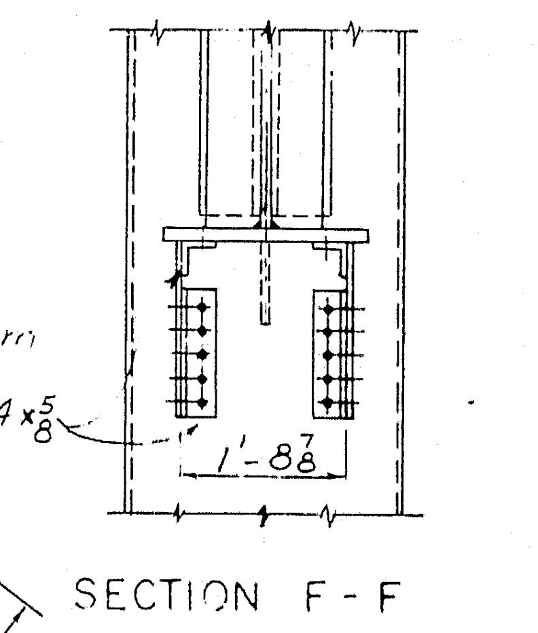
℄ Floor Beam
L 4 × 4 × ⅝
1'-8⅞

SECTION F-F

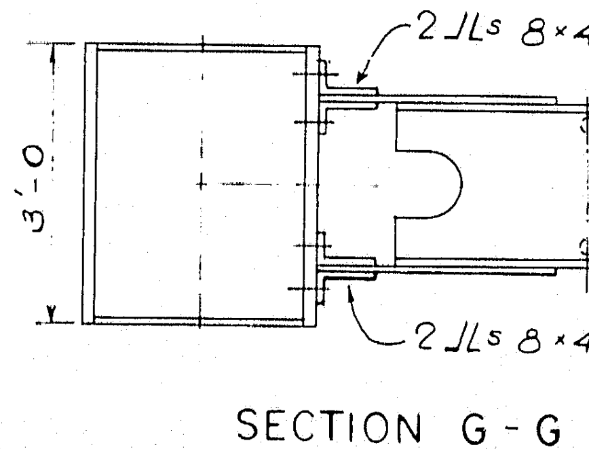
2 ∠s 8 × 4 × ⅝
3'-0
1'-9¼
2 ∠s 8 × 4 × ⅝
1¾ Drain Holes

SECTION G-G

AS BUILT
R. W. Christi 2/5/73

5

DESIGN — Alex Krizwo-selig TRACE — A. N. CHECK — S. Nishimura	BRIDGE NO. IN CHARGE OF — Richard W. Christi

NEW HAMPSHIRE
DEPARTMENT OF PUBLIC WORKS AND HIGHWAYS
AND
MAINE STATE HIGHWAY COMMISSION
INTERSTATE 95 BRIDGE
OVER
PISCATAQUA RIVER
BETWEEN
PORTSMOUTH, NEW HAMPSHIRE AND KITTERY, MAINE
RIVER BRIDGE

SWAY FRAME
PANEL POINT 8

SHEET 21 OF 54

HARDESTY & HANOVER
CONSULTING ENGINEERS
NEW YORK, N. Y.

129-116

B. P. R. REG. NO.	STATE	PROJECT NUMBER	SHEET NO.	TOTAL SHEETS
1	MAINE	I-95-1(22) 16	22	54

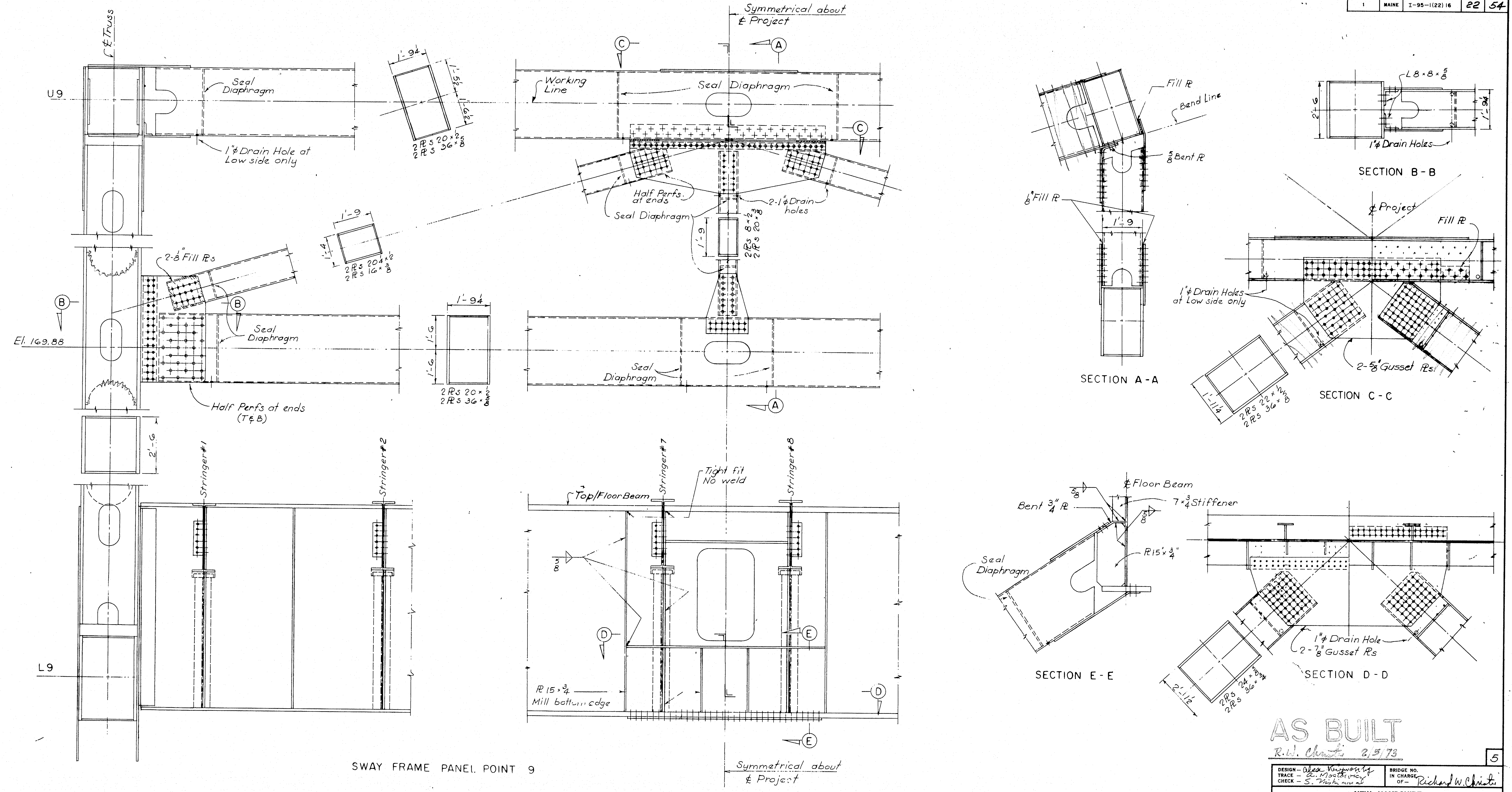

℄ Truss
U9
Seal Diaphragm
1"⌀ Drain Hole at Low side only
1'-9¼
1'-5¾
1'-6¾
2 Pℓs 20 × ½
2 Pℓs 36 × ⅜
1'-9
1'-4
2 Pℓs 20¼ × ½
2 Pℓs 16 × ⅜
2-⅜" Fill Pℓs
El. 169.88
Half Perfs at ends (T&B)
1'-6
1'-6
2'-6
L9
Stringer #1
Stringer #2
Symmetrical about ℄ Project
Working Line
Seal Diaphragm
Half Perfs at ends
2-1"⌀ Drain holes
Seal Diaphragm
1'-9
2 Pℓs 8 × ½
2 Pℓs 20 × ⅜
Stringer #7
Stringer #8
Tight fit No weld
Top/Floor Beam
⅜
Pℓ 15 × ¾
Mill bottom edge
SWAY FRAME PANEL POINT 9
Symmetrical about ℄ Project
Fill Pℓ
Bend Line
⅝ Bent Pℓ
⅛" Fill Pℓ
1'-9
SECTION A-A
L8 × 8 × ⅝
2'-6
1'-9¼
1"⌀ Drain Holes
SECTION B-B
℄ Project
Fill Pℓ
1"⌀ Drain Holes at Low side only
2-⅝" Gusset Pℓs
1'-11¼
2 Pℓs 22 × ½
2 Pℓs 36 × ⅜
SECTION C-C
℄ Floor Beam
Bent ¾" Pℓ
⅝
7 × ¾ Stiffener
⅝
Seal Diaphragm
Pℓ 15 × ¾"
SECTION E-E
1"⌀ Drain Hole
2-⅞" Gusset Pℓs
2'-1½
2 Pℓs 24 × ⅝
2 Pℓs 36 × ⅜
SECTION D-D
A
B
C
D
E

AS BUILT
R.W. Christie 2/5/73

For Sway Frame Notes see sheet 20

AS BUILT NOTE:
Lateral bracing diagonals U7 to U16 & M10 to M16 have been reversed.
See sh. 8.

5

DESIGN – Alex Varjawsky
TRACE – A. Mostkiewicz
CHECK – S. Vishnevski

BRIDGE NO.
IN CHARGE OF – Richard W. Christie

NEW HAMPSHIRE
DEPARTMENT OF PUBLIC WORKS AND HIGHWAYS
AND
MAINE STATE HIGHWAY COMMISSION
INTERSTATE 95 BRIDGE
OVER
PISCATAQUA RIVER
BETWEEN
PORTSMOUTH, NEW HAMPSHIRE AND KITTERY, MAINE
RIVER BRIDGE
SWAY FRAME
PANEL POINT 9
SHEET 22 OF 54

HARDESTY & HANOVER
CONSULTING ENGINEERS
NEW YORK, N. Y.

129-117

B. P. R. REG. NO.	STATE	PROJECT NUMBER	SHEET NO.	TOTAL SHEETS
1	MAINE	I-95-1(22) 16	23	54

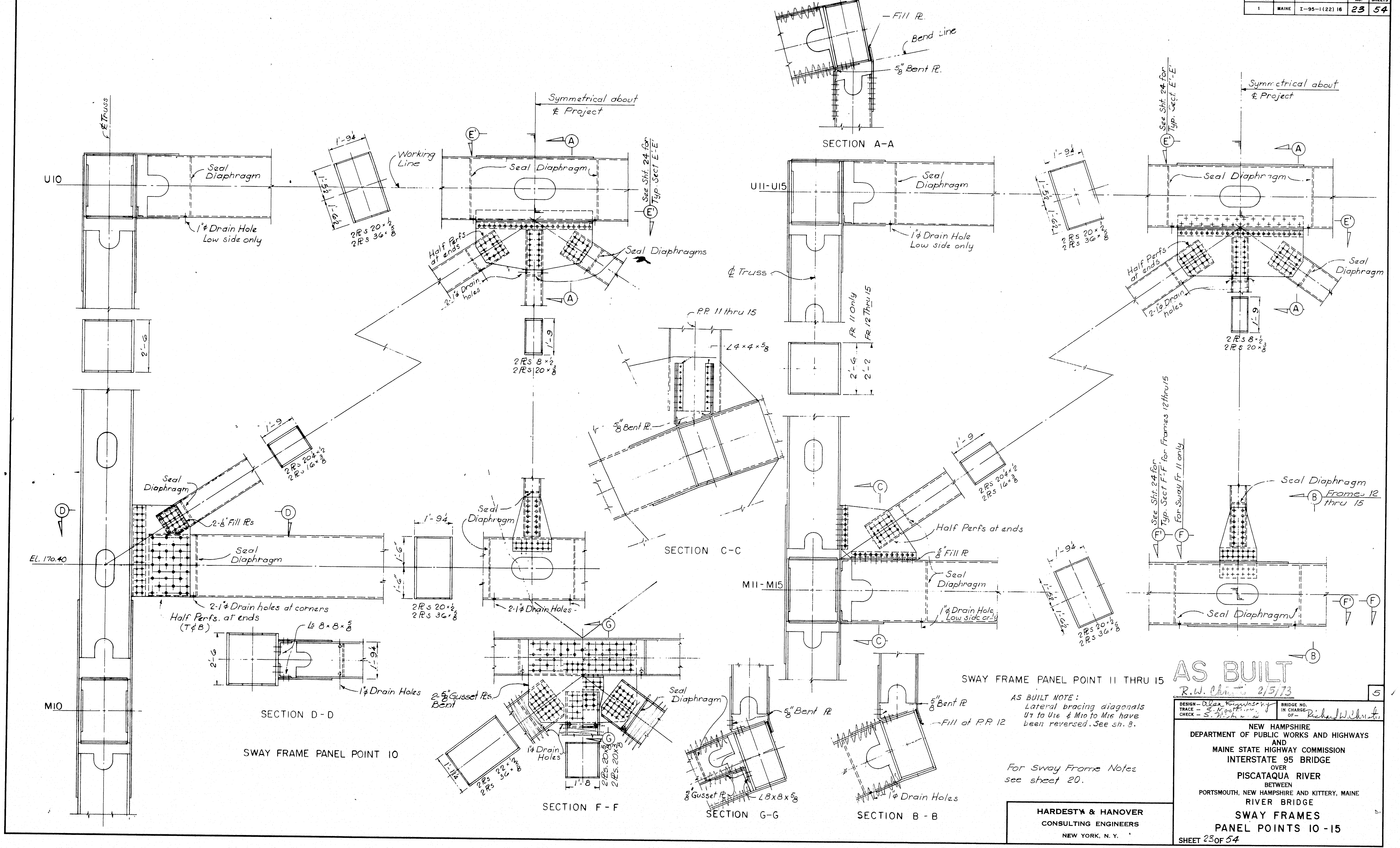

℄ Truss
U10
Seal Diaphragm
1"⌀ Drain Hole
Low side only
1'-9¼
1'-5½
1'-6½
2 PLs 20 × ½
2 PLs 36 × ⅝
Working Line
Symmetrical about
℄ Project
E'
A
Seal Diaphragm
See Sht. 24 for Typ. Sect. E'-E'
Half Perfs at ends
2-1"⌀ Drain holes
Seal Diaphragms
1'-9
2 PLs 8 × ½
2 PLs 20 × ⅜
2'-6
1'-9
2 PLs 20 × ½
2 PLs 16 × ⅜
Seal Diaphragm
2-⅝" Fill PLs
D
El. 170.40
Seal Diaphragm
2-1"⌀ Drain holes at corners
Half Perfs. at ends (T & B)
1'-9¼
1'-6"
1'-6"
2 PLs 20 × ½
2 PLs 36 × ⅝
Seal Diaphragm
2-1"⌀ Drain Holes
Ls 8 × 8 × ⅝
2'-6
1'-9¼
1"⌀ Drain Holes
SECTION D-D
M10
SWAY FRAME PANEL POINT 10
G
2-⅝" Gusset PLs. Bent
Seal Diaphragm
1"⌀ Drain Holes
1'-1¼
2 PLs 22 × ½
2 PLs 36 × ⅝
1'-8
2 PLs 20 × ½
2 PLs 20 × ⅜
SECTION F-F
Fill PL
Bend Line
⅝" Bent PL
SECTION A-A
P.P. 11 thru 15
∠4 × 4 × ⅝
⅝" Bent PL
SECTION C-C
⅝" Bent PL
Fill at P.P. 12
⅝" Gusset PL
L8 × 8 × ⅝
1"⌀ Drain Holes
SECTION G-G
⅝" Bent PL
SECTION B-B
U11-U15
Seal Diaphragm
1"⌀ Drain Hole
Low side only
℄ Truss
Fr. 11 Only
Fr. 12 Thru 15
2'-6
2'-2
C
Half Perfs at ends
⅝" Fill PL
M11-M15
Seal Diaphragm
1"⌀ Drain Hole
Low side only
1'-9
2 PLs 20 × ½
2 PLs 16 × ⅜
1'-9¼
1'-5½
1'-6½
2 PLs 20 × ½
2 PLs 36 × ⅝
Symmetrical about
℄ Project
See Sht. 24 for Typ. Sect. E'-E'
Seal Diaphragm
E'
Half Perfs at ends
2-1"⌀ Drain holes
Seal Diaphragm
1'-9
2 PLs 8 × ½
2 PLs 20 × ⅜
See Sht. 24 for Typ. Sect. F-F for Frames 12 thru 15
For Sway Fr. 11 only
Seal Diaphragm
B
Frames 12 thru 15
F'
F
Seal Diaphragm
SWAY FRAME PANEL POINT 11 THRU 15

AS BUILT NOTE:
Lateral bracing diagonals U7 to U16 & M10 to M16 have been reversed. See sh. 8.

For Sway Frame Notes see sheet 20.

AS BUILT
R. W. Christie 2/5/73

5

HARDESTY & HANOVER
CONSULTING ENGINEERS
NEW YORK, N. Y.

DESIGN – Alex Krajewski
TRACE – G. Noetti...
CHECK – S. Nishm...

BRIDGE NO.
IN CHARGE OF – Richard W. Christie

NEW HAMPSHIRE
DEPARTMENT OF PUBLIC WORKS AND HIGHWAYS
AND
MAINE STATE HIGHWAY COMMISSION
INTERSTATE 95 BRIDGE
OVER
PISCATAQUA RIVER
BETWEEN
PORTSMOUTH, NEW HAMPSHIRE AND KITTERY, MAINE
RIVER BRIDGE

SWAY FRAMES
PANEL POINTS 10 - 15

SHEET 23 OF 54

129-118

B. P. R. REG. NO.	STATE	PROJECT NUMBER	SHEET NO.	TOTAL SHEETS
1	MAINE	I-95-1(22)16	24	54

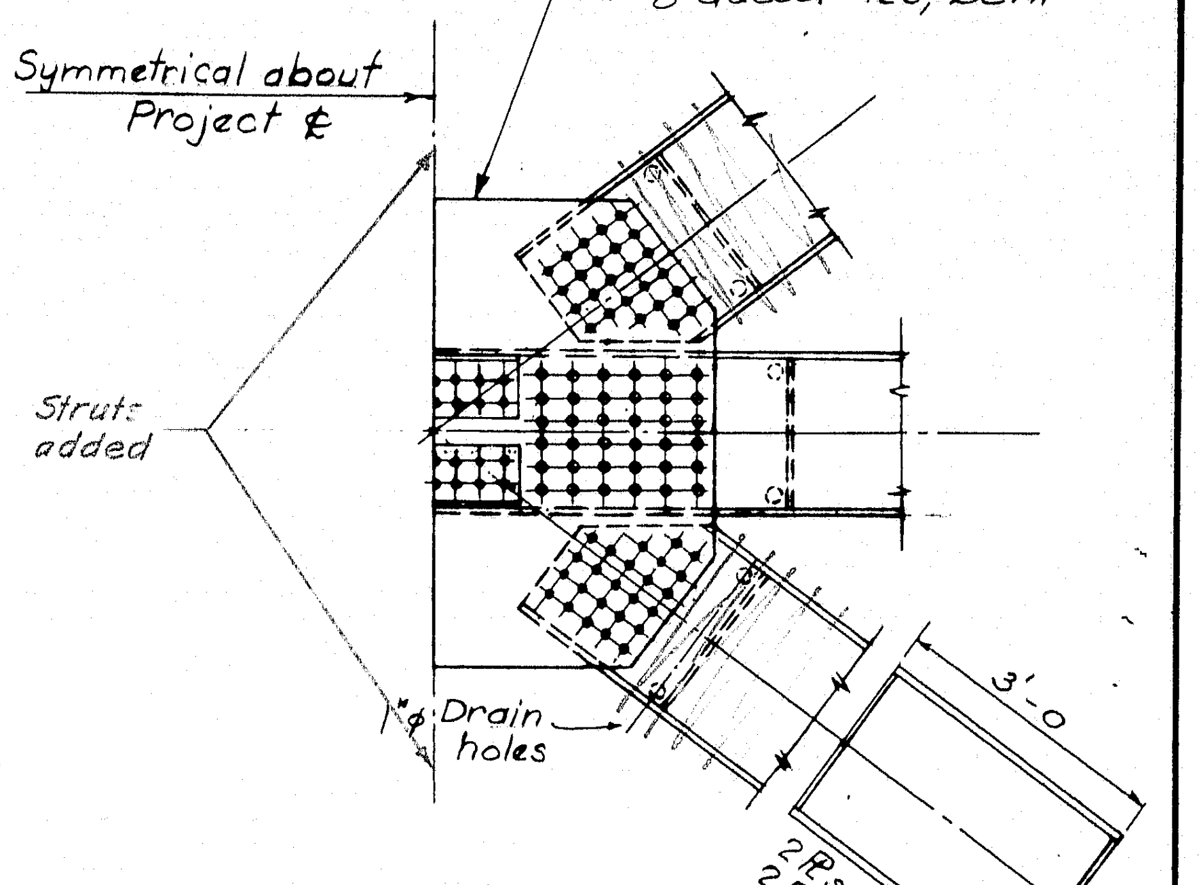
Symmetrical about Project ℄
2-⅝" Gusset PLs, Bent
Struts added
1"φ Drain holes
3'-0
2 PLs 22 × ½
2 PLs 36 × ⅝

SECTION D - D

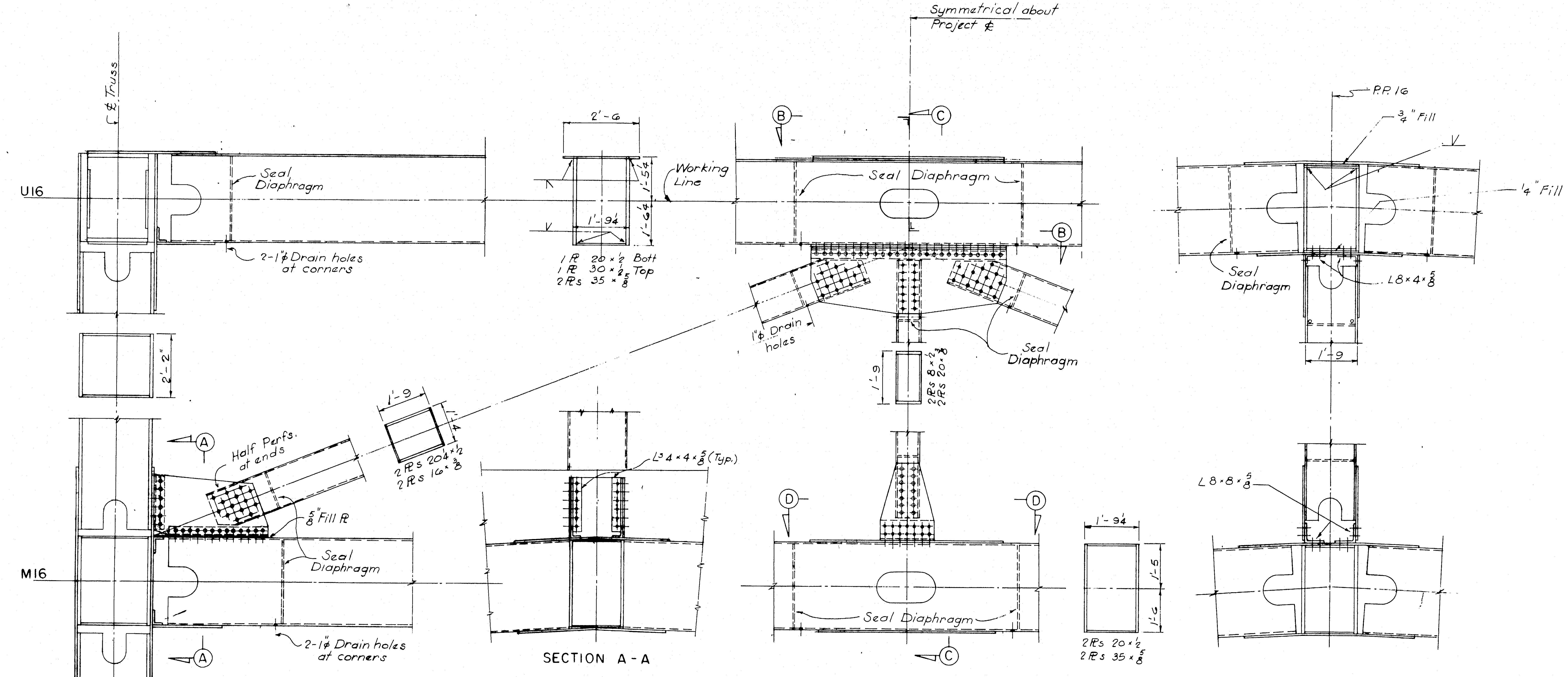
℄ Truss
U16
M16
Seal Diaphragm
2-1"φ Drain holes at corners
2'-6
1'-5¼
1'-6¼
1'-9¼
Working Line
1 PL 20 × ½ Bott
1 PL 30 × ½ Top
2 PLs 35 × ⅝
2'-2"
A
Half Perfs. at ends
⅝" Fill PL
1'-9
1'-4
2 PLs 20¼ × ½
2 PLs 16 × ⅜
L^s 4 × 4 × ⅝ (Typ.)
Symmetrical about Project ℄
B
C
D
1"φ Drain holes
2 PLs 8 × ½
2 PLs 20 × ⅜
1'-9¼
1'-5
1'-6
2 PLs 20 × ½
2 PLs 35 × ⅝
P.P. 16
¾" Fill
¼" Fill
L 8 × 4 × ⅝
L 8 × 8 × ⅝

SECTION A - A

SECTION C - C

SWAY FRAME PANEL POINT 16

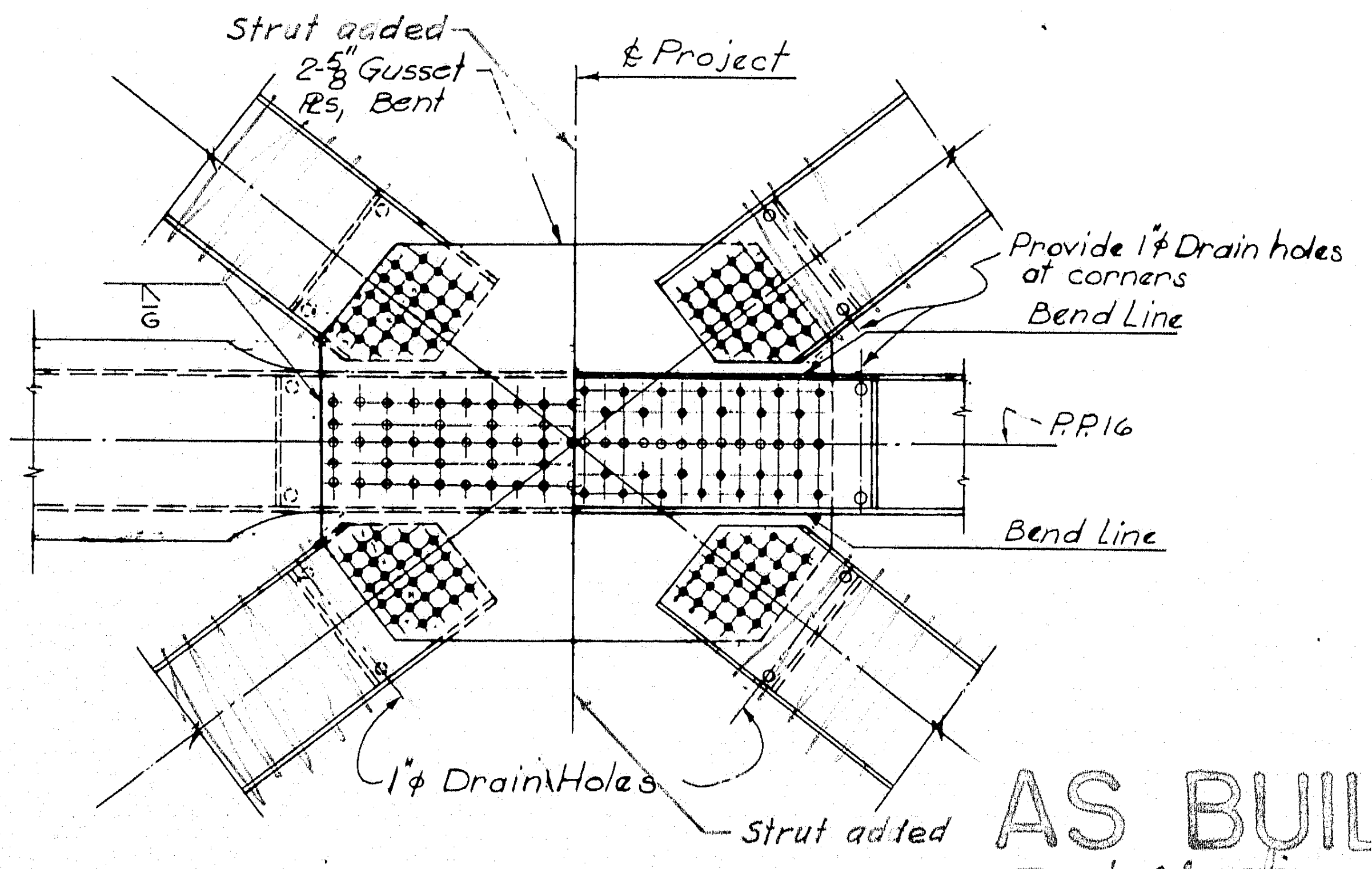
Strut added
2-⅝" Gusset PLs, Bent
℄ Project
Provide 1"φ Drain holes at corners
Bend Line
P.P. 16
G
Bend Line
1"φ Drain Holes
Strut added

SECTION B - B

AS BUILT NOTE:
Lateral bracing diagonals U7 to U16 & M10 to M16 have been reversed. See sh. 5.

For Sway Frame Notes see sheet 20.

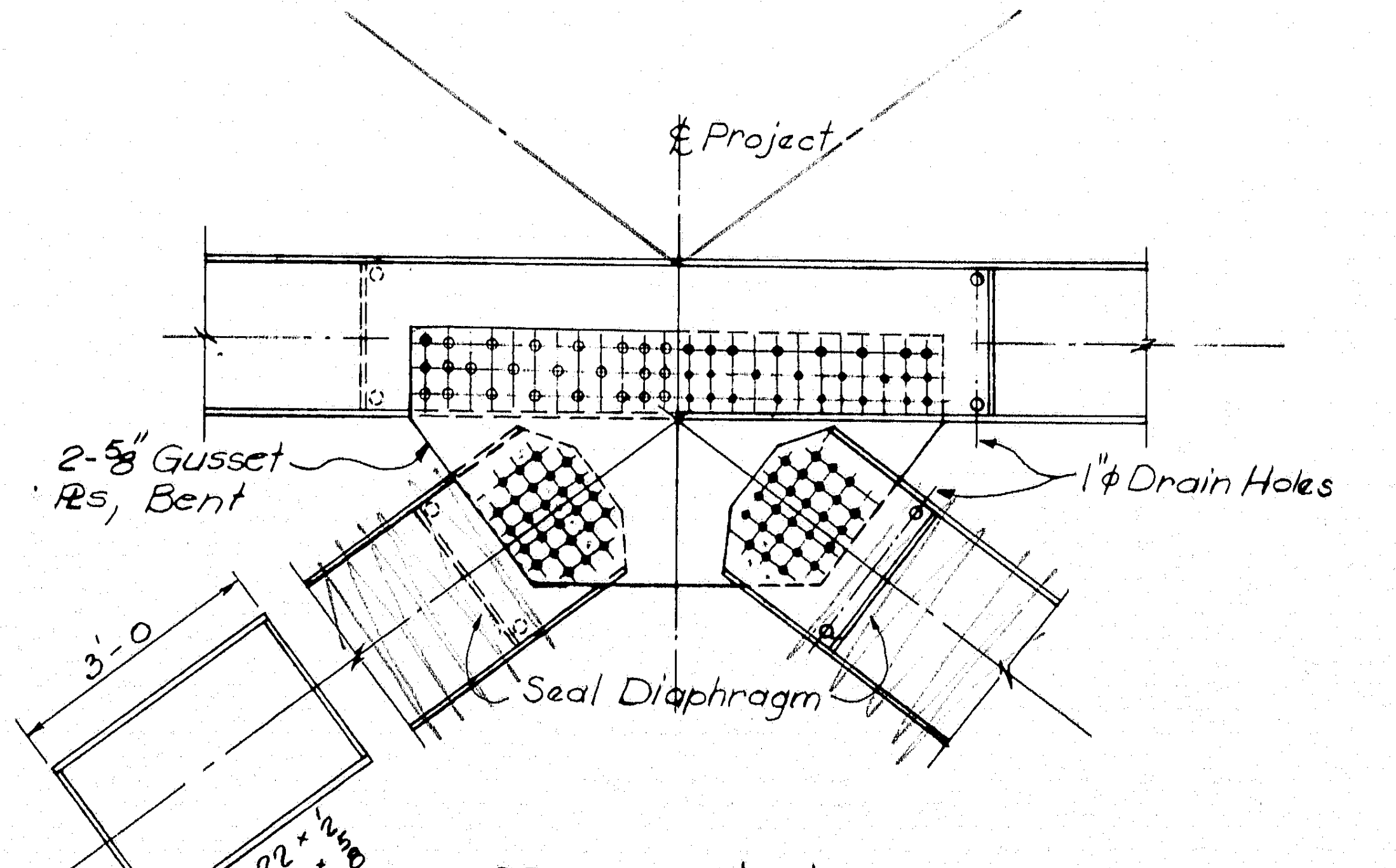
℄ Project
2-⅝" Gusset PLs, Bent
1"φ Drain Holes
Seal Diaphragm
3'-0
2 PLs 22 × ½
2 PLs 36 × ⅝

SECTION E'-E'
Panel Points 10-15
TYPICAL TOP LATERAL BRACING DETAIL

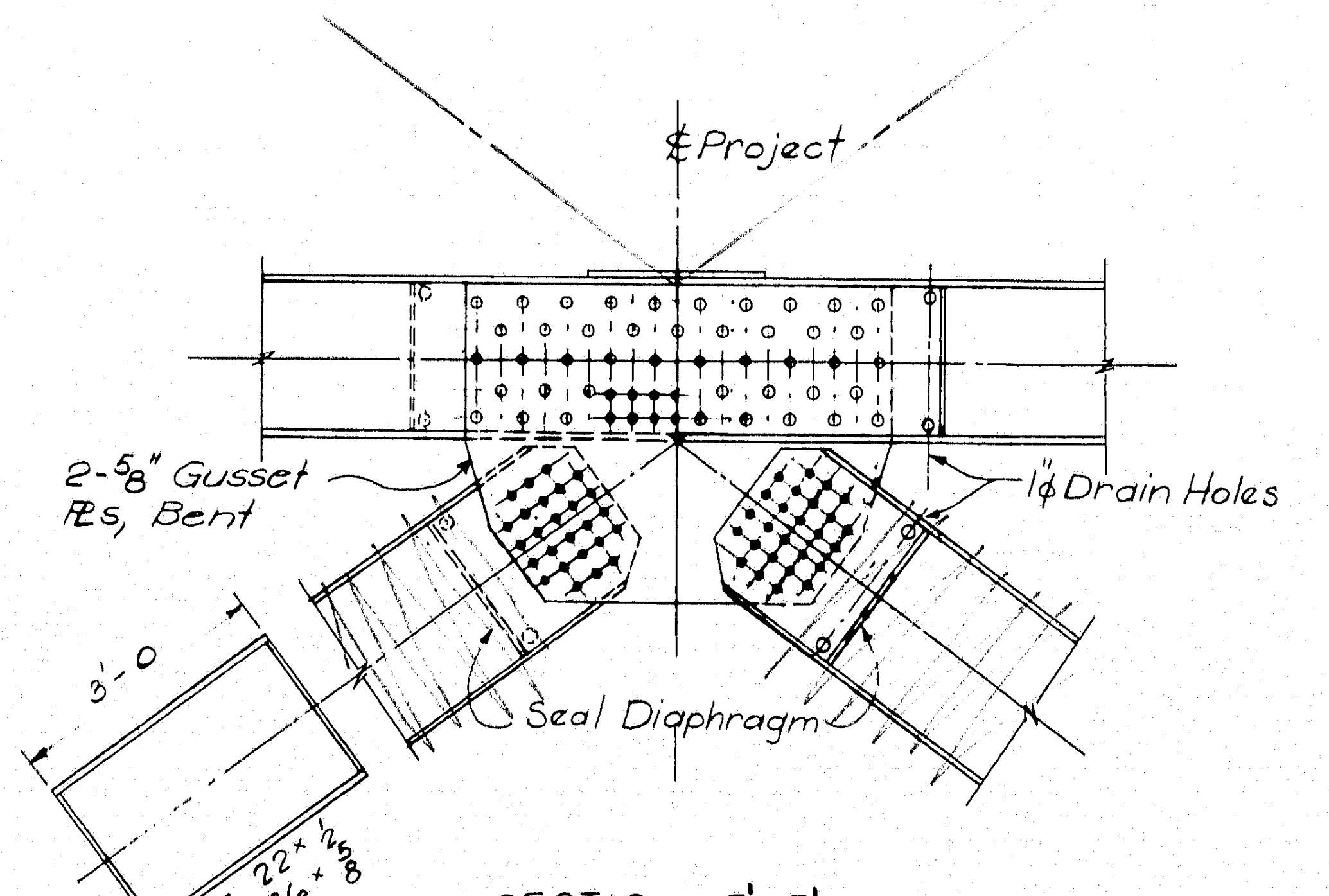
℄ Project
2-⅝" Gusset PLs, Bent
1"φ Drain Holes
Seal Diaphragm
3'-0
2 PLs 22 × ½
2 PLs 36 × ⅝

SECTION F'-F'
Panel Points 10-15
TYPICAL MIDDLE LATERAL BRACING DETAIL

AS BUILT
R. W. Christie 2/5/73

5

DESIGN — Alex Krynoseky
TRACE — a. M.
CHECK — S. Nishimura

BRIDGE NO.
IN CHARGE OF — Richard W. Christie

NEW HAMPSHIRE
DEPARTMENT OF PUBLIC WORKS AND HIGHWAYS
AND
MAINE STATE HIGHWAY COMMISSION
INTERSTATE 95 BRIDGE
OVER
PISCATAQUA RIVER
BETWEEN
PORTSMOUTH, NEW HAMPSHIRE AND KITTERY, MAINE
RIVER BRIDGE
SWAY FRAME
PANEL POINT 16
SHEET 24 OF 54

HARDESTY & HANOVER
CONSULTING ENGINEERS
NEW YORK, N. Y.

129-119

B. P. R. REG. NO.	STATE	PROJECT NUMBER	SHEET NO.	TOTAL SHEETS
1	MAINE	I-95-1 (22) 16	25	54

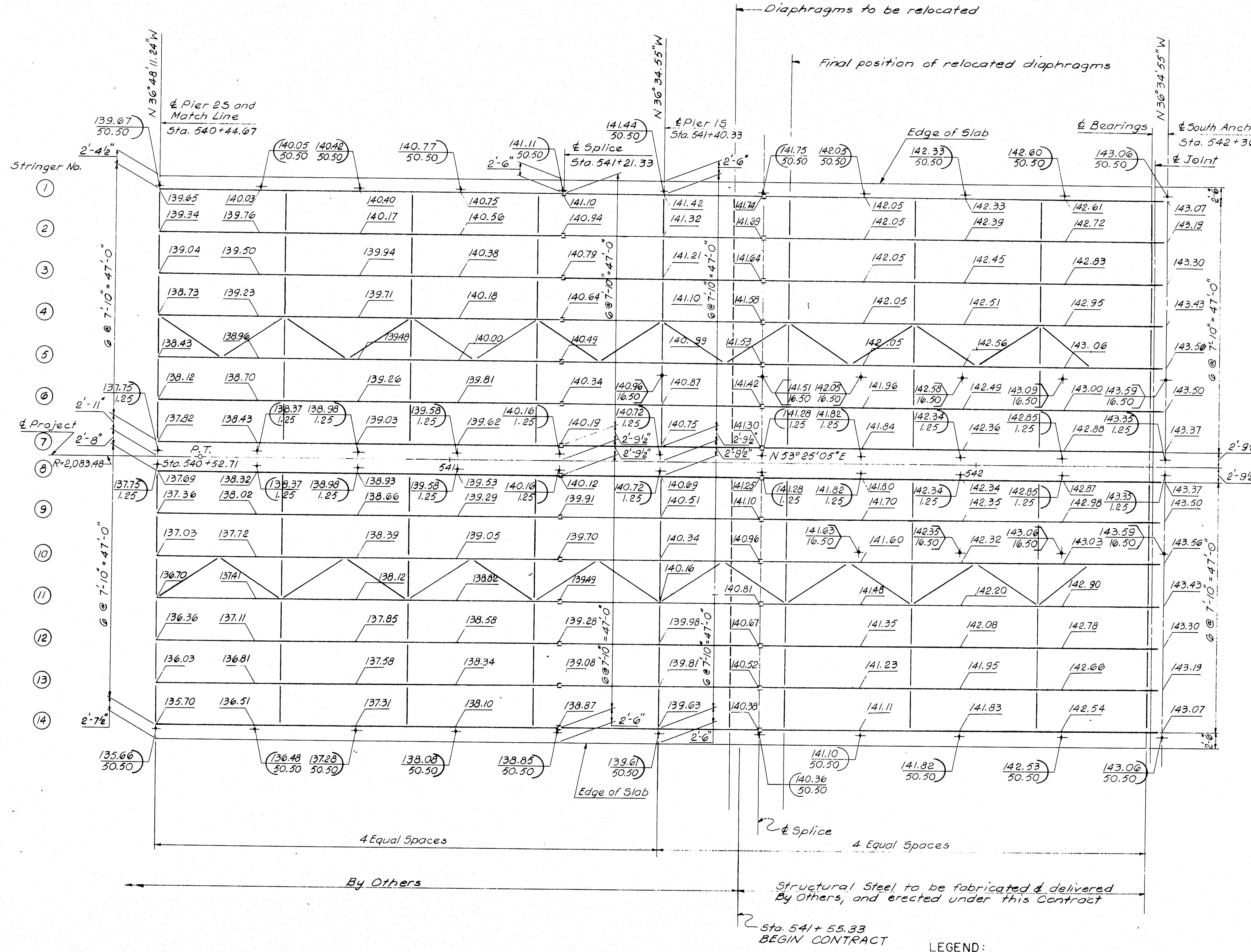
Diaphragms to be relocated
Final position of relocated diaphragms
N 36° 48' 11.24" W
℄ Pier 25 and Match Line
Sta. 540+44.67
N 36° 34' 55" W
℄ Splice
Sta. 541+21.33
℄ Pier 15
Sta. 541+40.33
Edge of Slab
℄ Bearings
℄ South Anchor Pier
Sta. 542+36.00
℄ Joint
N 36° 34' 55" W
Stringer No.
1
2
3
4
5
6
7
8
9
10
11
12
13
14
2'-4½"
2'-11"
2'-8"
2'-7½"
2'-6"
2'-9½"
℄ Project
R=2,083.48
P.T.
Sta. 540+52.71
541
542
N 53° 25' 05" E
6 @ 7'-10" = 47'-0"
Edge of Slab
℄ Splice
4 Equal Spaces
4 Equal Spaces
By Others
Structural Steel to be fabricated & delivered By Others, and erected under this Contract
Sta. 541+55.33
BEGIN CONTRACT

STRINGER NUMBER	WEB PLATE	FLANGES			
		Sta. 540+44.67 to Sta. 540+63.67	Sta. 540+63.67 to Sta. 541+21.33	Sta. 541+21.33 to Sta. 541+59.33	Sta. 541+59.33 to Sta. 542+36.00
1-14	54×⅜	16×1¼	16×¾	16×1¾	16×1
		Stringer Type "B-1"		Stringer Type "G"	
		Match Line		Splice	Splice

Exp. Joint

LEGEND:

142.53 ← Gutter Elevation
50.50 ← Gutter Offset
143.06 ← High Point Elevation
16.50 ← High Point Offset

Painting Note:
The remainder of the New Hampshire Approach Structural Steel is similar except that the number of stringers increase to 19 stringers at the abutment.

NOTE: (Approaches Only)
Elevations given are for top of wearing surface. Vertical distance from top of wearing surface to top of stringer web is 1'-1". Elevations are given for 5th points of stringer spans.
1'-1" & variable

AS BUILT
R. W. Christie 2/5/73

5

DESIGN —
TRACE — A. Tchenkeli
CHECK — B. Rey

BRIDGE NO.
IN CHARGE OF — Richard W. Christie

NEW HAMPSHIRE
DEPARTMENT OF PUBLIC WORKS AND HIGHWAYS
AND
MAINE STATE HIGHWAY COMMISSION
INTERSTATE 95 BRIDGE
OVER
PISCATAQUA RIVER
BETWEEN
PORTSMOUTH, NEW HAMPSHIRE AND KITTERY, MAINE
NEW HAMPSHIRE APPROACH
FRAMING PLAN
STA. 540+45 TO STA. 542+33
SHEET 25 OF 54

HARDESTY & HANOVER
CONSULTING ENGINEERS
NEW YORK, N. Y.

129-120

B. P. R. REG. NO.	STATE	PROJECT NUMBER	SHEET NO.	TOTAL SHEETS
1	MAINE	I-95-1(22) 16	26	54

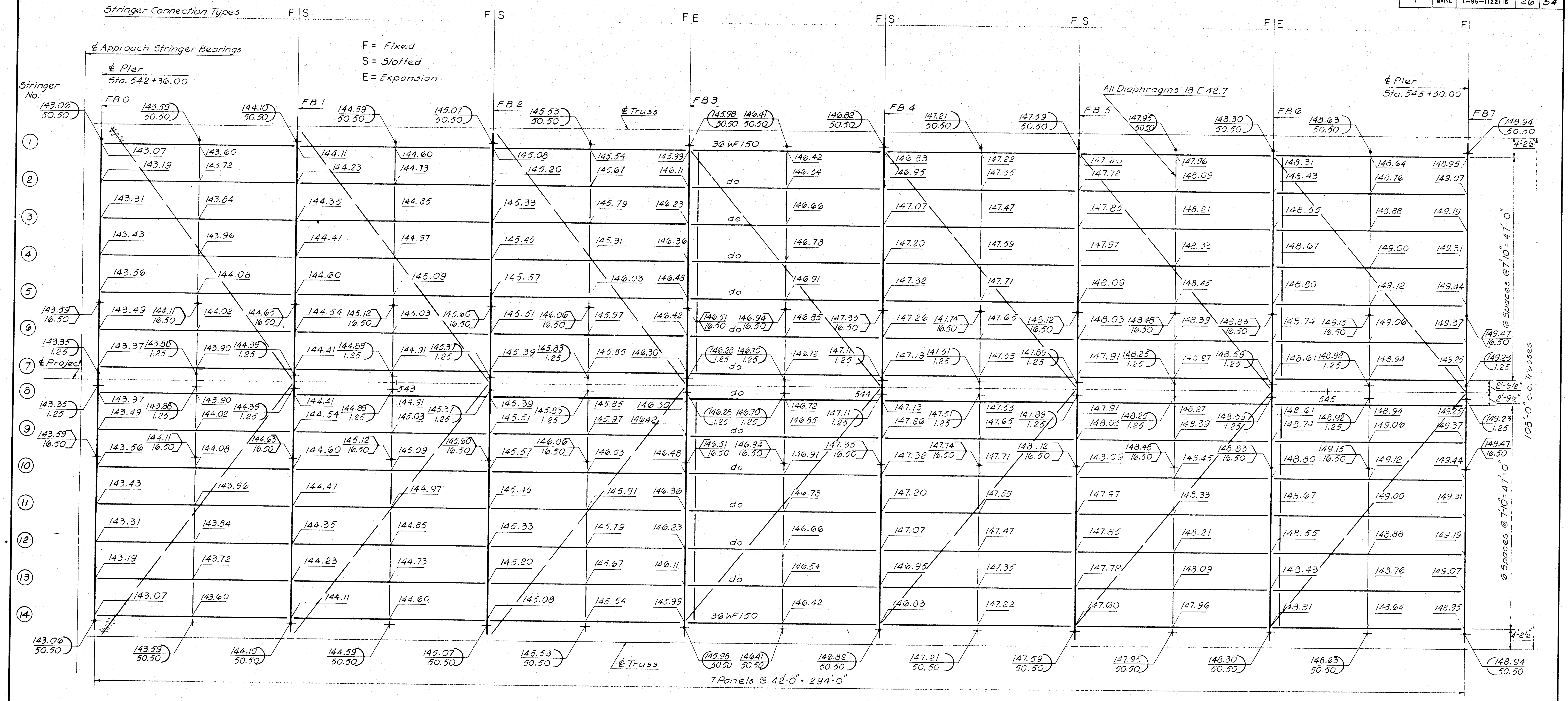

Stringer Connection Types
F = Fixed
S = Slotted
E = Expansion
℄ Approach Stringer Bearings
℄ Pier
Sta. 542+36.00
℄ Pier
Sta. 545+30.00
Stringer No.
FB 0
FB 1
FB 2
FB 3
FB 4
FB 5
FB 6
FB 7
℄ Truss
℄ Project
All Diaphragms 18 [42.7
36 WF 150
do
543
544
545
7 Panels @ 42'-0" = 294'-0"
6 Spaces @ 7'-10" = 47'-0"
108'-0" c.c. Trusses
4'-2½"
2'-9½"

Note: (River Bridge Only)
Elevations given are for top of wearing surface. Vertical distance from top of wearing surface to top of stringer is (1'-0"). 1'-0" & variable Elevations are given for end and midpoints between panel points.

AS BUILT
R. W. Christie 2/5/73

5

DESIGN –
TRACE – A. Tahenrali
CHECK – B. Ray
BRIDGE NO.
IN CHARGE OF – Richard W. Christie

NEW HAMPSHIRE
DEPARTMENT OF PUBLIC WORKS AND HIGHWAYS
AND
MAINE STATE HIGHWAY COMMISSION
INTERSTATE 95 BRIDGE
OVER
PISCATAQUA RIVER
BETWEEN
PORTSMOUTH, NEW HAMPSHIRE AND KITTERY, MAINE
RIVER BRIDGE
DECK FRAMING
END SPANS
SHEET 26 OF 54

HARDESTY & HANOVER
CONSULTING ENGINEERS
NEW YORK, N. Y.

129-121

B. P. R. REG. NO.	STATE	PROJECT NUMBER	SHEET NO.	TOTAL SHEETS
1	MAINE	I-95-1(22)16	27	54

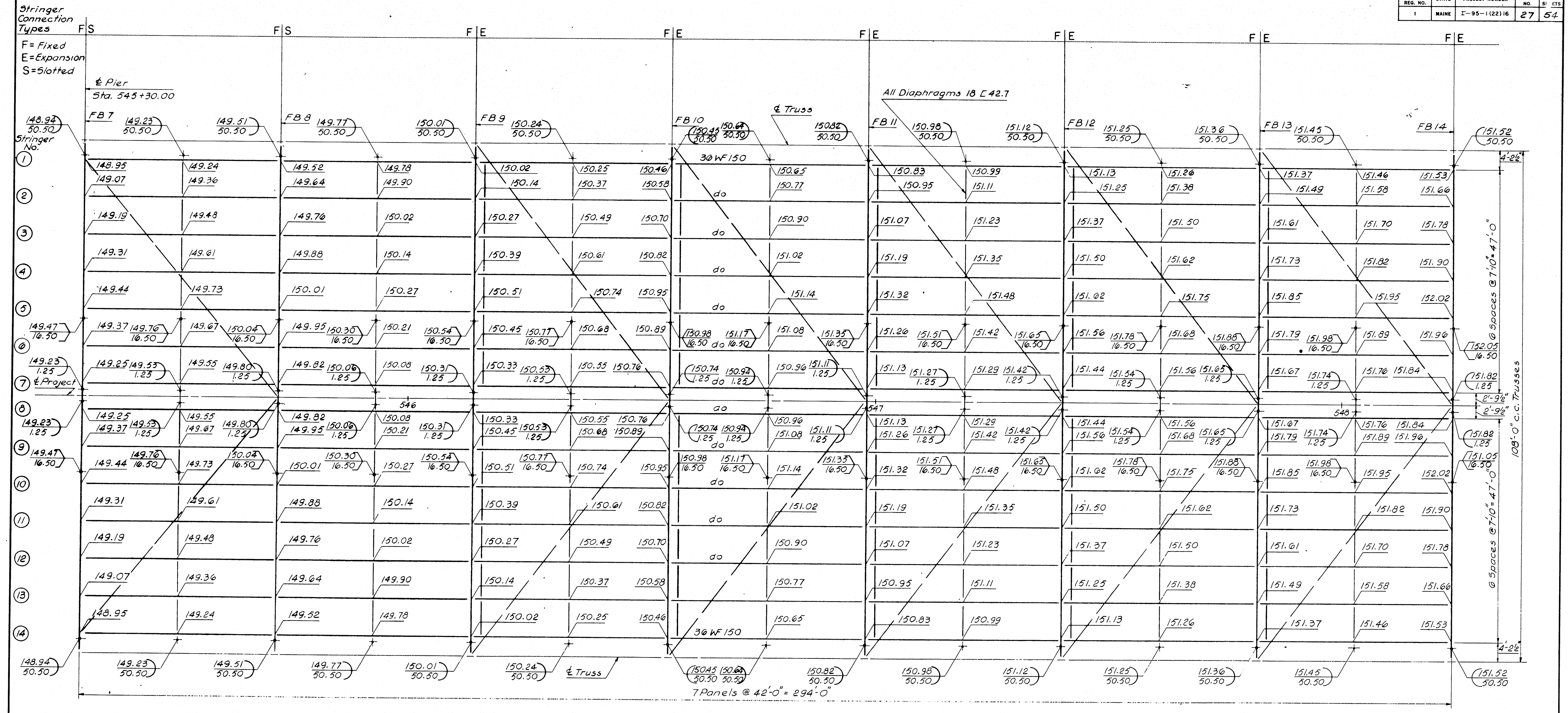

Stringer Connection Types
F= Fixed
E= Expansion
S= Slotted
F|S
F|E
℄ Pier
Sta. 545+30.00
℄ Truss
All Diaphragms 18 [42.7
FB 7
FB 8
FB 9
FB 10
FB 11
FB 12
FB 13
FB 14
Stringer No.
① ② ③ ④ ⑤ ⑥ ⑦ ⑧ ⑨ ⑩ ⑪ ⑫ ⑬ ⑭
℄ Project
30 WF 150
36 WF 150
do
546
547
548
148.94 / 50.50
149.23 / 50.50
149.51 / 50.50
149.77 / 50.50
150.01 / 50.50
150.24 / 50.50
150.45 / 50.50
150.64 / 50.50
150.82 / 50.50
150.98 / 50.50
151.12 / 50.50
151.25 / 50.50
151.36 / 50.50
151.45 / 50.50
151.52 / 50.50
149.47 / 16.50
149.23 / 1.25
152.05 / 16.50
151.82 / 1.25
4'-2 5/8"
2'-9 3/8"
6 Spaces @ 7'-10" = 47'-0"
108'-0" c.c. Trusses
7 Panels @ 42'-0" = 294'-0"

AS BUILT
R.W. Christie 2/5/73

5

DESIGN – [illegible]
TRACE – A. Tchenkeli
CHECK – B. Pek

BRIDGE NO.
IN CHARGE OF – Richard W. Christie

NEW HAMPSHIRE
DEPARTMENT OF PUBLIC WORKS AND HIGHWAYS
AND
MAINE STATE HIGHWAY COMMISSION

INTERSTATE 95 BRIDGE
OVER
PISCATAQUA RIVER
BETWEEN
PORTSMOUTH, NEW HAMPSHIRE AND KITTERY, MAINE

RIVER BRIDGE

DECK FRAMING I
CENTER SPAN

SHEET 27 OF 54

HARDESTY & HANOVER
CONSULTING ENGINEERS
NEW YORK, N. Y.

129-122

B. P. R. REG. NO.	STATE	PROJECT NUMBER	SHEET NO.	TOTAL SHEETS
1	MAINE	I-95-1(22)16	28	54

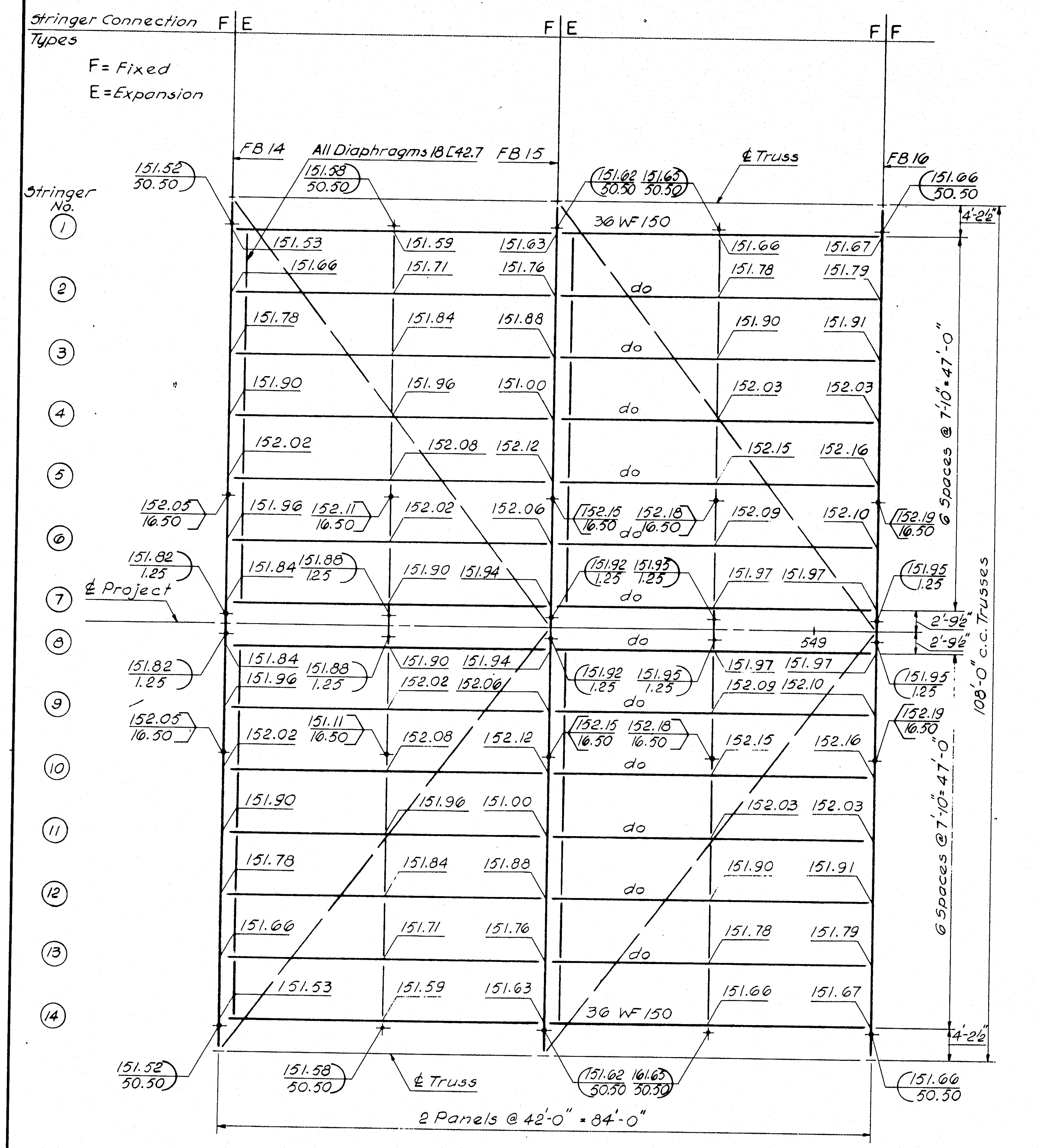
Stringer Connection Types
F = Fixed
E = Expansion
F E
F E
F F
FB 14
All Diaphragms 18 [42.7
FB 15
℄ Truss
FB 16
Stringer No.
1
2
3
4
5
6
7
8
9
10
11
12
13
14
151.52 / 50.50
151.58 / 50.50
151.62 / 151.65 / 50.50 / 50.50
151.66 / 50.50
36 WF 150
do
151.53
151.59
151.63
151.66
151.67
151.66
151.71
151.76
151.78
151.79
151.78
151.84
151.88
151.90
151.91
151.90
151.96
151.00
152.03
152.03
152.02
152.08
152.12
152.15
152.16
152.05 / 16.50
151.96
152.11 / 16.50
152.02
152.06
152.15 / 16.50
152.18 / 16.50
152.09
152.10
152.19 / 16.50
151.82 / 1.25
℄ Project
151.84
151.88 / 1.25
151.90
151.94
151.92 / 1.25
151.95 / 1.25
151.97
151.97
151.95 / 1.25
549
2'-9½"
2'-9½"
4'-2½"
6 Spaces @ 7'-10" = 47'-0"
108'-0" c.c. Trusses
6 Spaces @ 7'-10" = 47'-0"
4'-2½"
151.84
151.96
152.02
152.06
152.09
152.10
152.02
152.08
152.12
151.11 / 16.50
151.90
151.96
151.00
152.03
152.03
151.78
151.84
151.88
151.90
151.91
151.66
151.71
151.76
151.78
151.79
151.53
151.59
151.63
151.66
151.67
36 WF 150
2 Panels @ 42'-0" = 84'-0"

INTERMEDIATE FLOOR BEAMS

DEAD LOAD DEFLECTION AT EACH STRINGER LOCATION RELATIVE TO THE ENDS OF THE FLOOR BEAM

LOAD	Stringer No.													
	1	2	3	4	5	6	7	8	9	10	11	12	13	14
Steel	1/16	1/8	1/4	1/4	5/16	3/8	3/8	3/8	3/8	5/16	1/4	1/4	1/8	1/16
Concrete	1/8	3/8	9/16	3/4	7/8	15/16	1	1	15/16	7/8	3/4	9/16	3/8	1/8
Asphalt	1/16	1/8	3/16	1/4	1/4	5/16	5/16	5/16	5/16	1/4	1/4	3/16	1/8	1/16
TOTAL	1/4	5/8	1	1 1/4	1 7/16	1 5/8	1 11/16	1 11/16	1 5/8	1 7/16	1 1/4	1	5/8	1/4

APPROACH STRINGERS

DEAD LOAD DEFLECTION (INCHES)

LOAD	POINT			
	1/5	2/5	3/5	4/5
Steel	—	—	—	—
Concrete	5/8	1 1/8	1 3/16	3/4
Asphalt	1/16	1/8	1/8	1/16
TOTAL	11/16	1 1/4	1 5/16	13/16

Approach Pier

Anchor Pier

TRUSS STRINGERS

DEAD LOAD DEFLECTION AT MIDSPAN RELATIVE TO THE ENDS OF THE STRINGER

LOAD	
Steel	1/16
Concrete	3/16
Asphalt	1/16
TOTAL	5/16

FLOOR BEAMS AT ANCHOR PIERS

DEAD LOAD DEFLECTION AT EACH STRINGER LOCATION RELATIVE TO THE ENDS OF THE FLOOR BEAM

LOAD	Stringer No.													
	1	2	3	4	5	6	7	8	9	10	11	12	13	14
Steel	1/16	7/16	3/4	15/16	1 1/16	1 3/16	1 1/4	1 1/4	1 3/16	1 1/16	15/16	3/4	7/16	1/16
Concrete	1/8	9/16	7/8	1 1/8	1 1/4	1 3/8	1 1/2	1 1/2	1 3/8	1 1/4	1 1/8	7/8	9/16	1/8
Asphalt	1/16	1/8	3/16	1/4	5/16	5/16	3/8	3/8	5/16	5/16	1/4	3/16	1/8	1/16
TOTAL	1/4	1 1/8	1 13/16	2 5/16	2 5/8	2 7/8	3 1/8	3 1/8	2 7/8	2 5/8	2 5/16	1 13/16	1 1/8	1/4

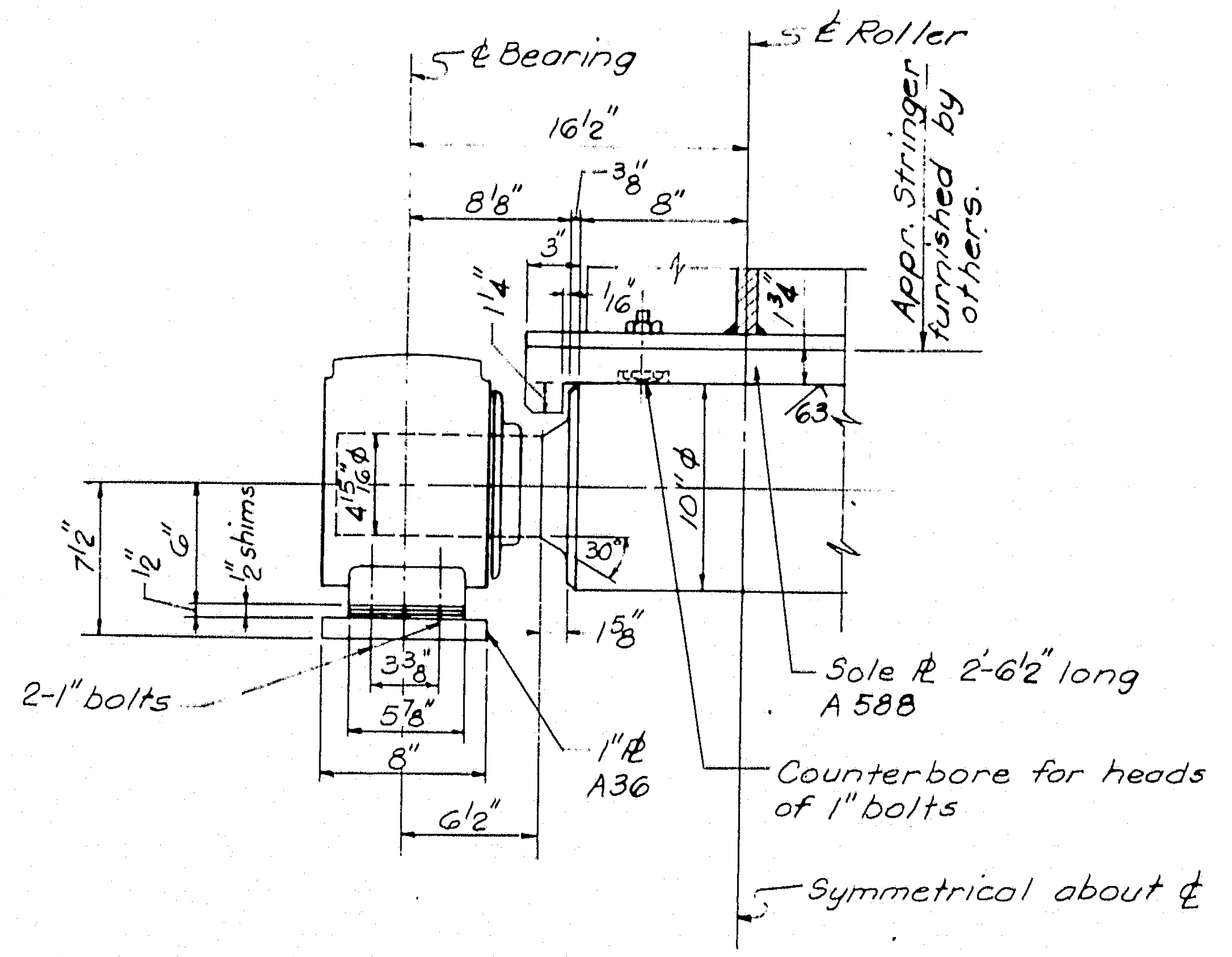
℄ Bearing
℄ Roller
16½"
8⅛"
⅜"
8"
3"
1¼"
1/16"
1¾"
Appr. Stringer furnished by others.
63
4 15/16" ⌀
10" ⌀
30°
7½"
½"
6"
½" shims
1⅝"
3⅜"
5⅞"
8"
6½"
2-1" bolts
1" ℞ A36
Sole ℞ 2'-6½" long A 588
Counterbore for heads of 1" bolts
Symmetrical about ℄

APPROACH EXPANSION SHOE

AT ANCHOR PIER

Scale: 1½" = 1'-0"

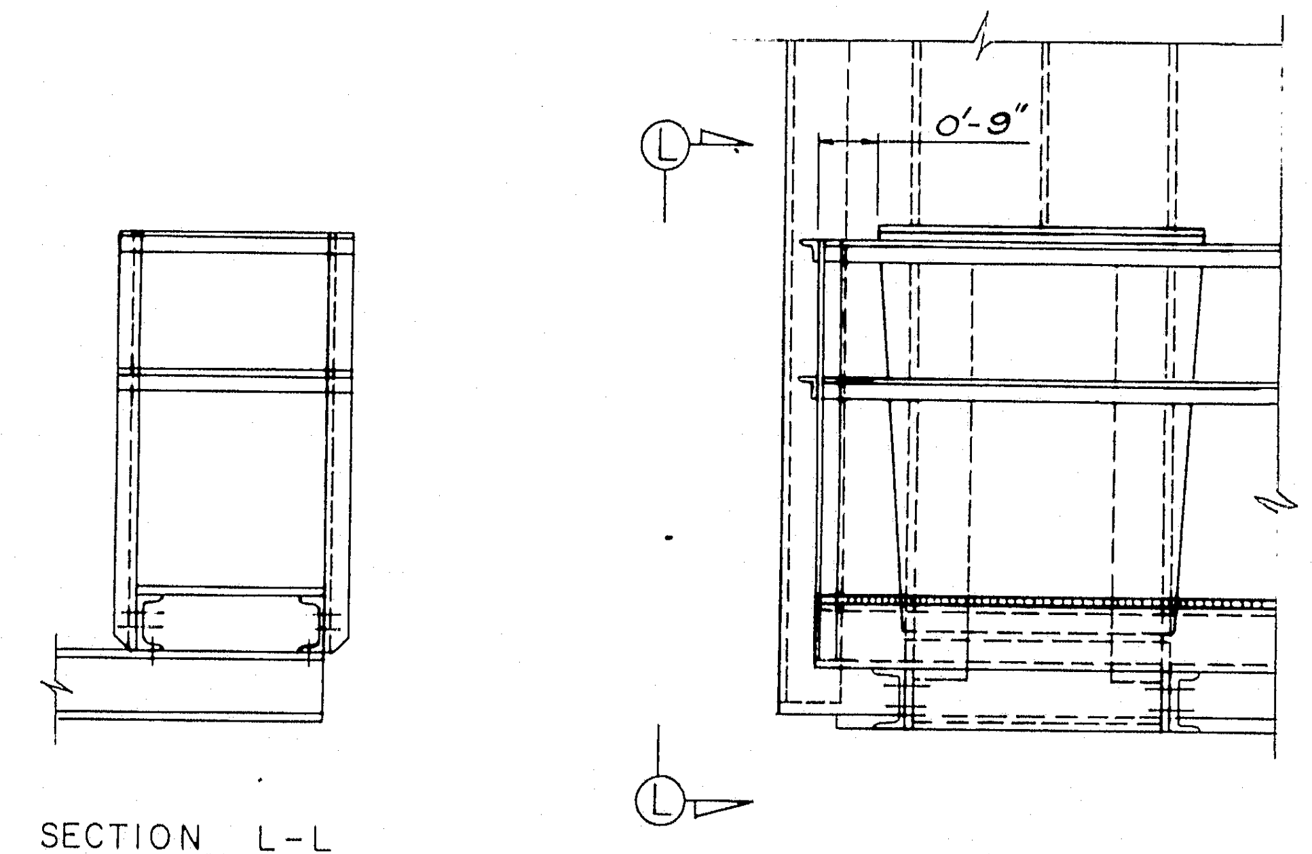

SECTION L-L

END DETAILS - ACCESS PLATFORM

AT FLOOR BEAM 0

Scale: ½" = 1'-0"

AS BUILT
K. W. Christie 2/5/73

5

DESIGN – A. W. Hawk
TRACE – A. Tchenkeli
CHECK – B. Raly
BRIDGE NO.
IN CHARGE OF – Richard W. Christie

NEW HAMPSHIRE
DEPARTMENT OF PUBLIC WORKS AND HIGHWAYS
AND
MAINE STATE HIGHWAY COMMISSION
INTERSTATE 95 BRIDGE
OVER
PISCATAQUA RIVER
BETWEEN
PORTSMOUTH, NEW HAMPSHIRE AND KITTERY, MAINE
RIVER BRIDGE
DECK FRAMING II
CENTER SPAN
SHEET 28 OF 54

HARDESTY & HANOVER
CONSULTING ENGINEERS
NEW YORK, N. Y.

129-123

B. P. R. REG. NO.	STATE	PROJECT NUMBER	SHEET NO.	TOTAL SHEETS
1	MAINE	I-95-1(22) 16	29	54

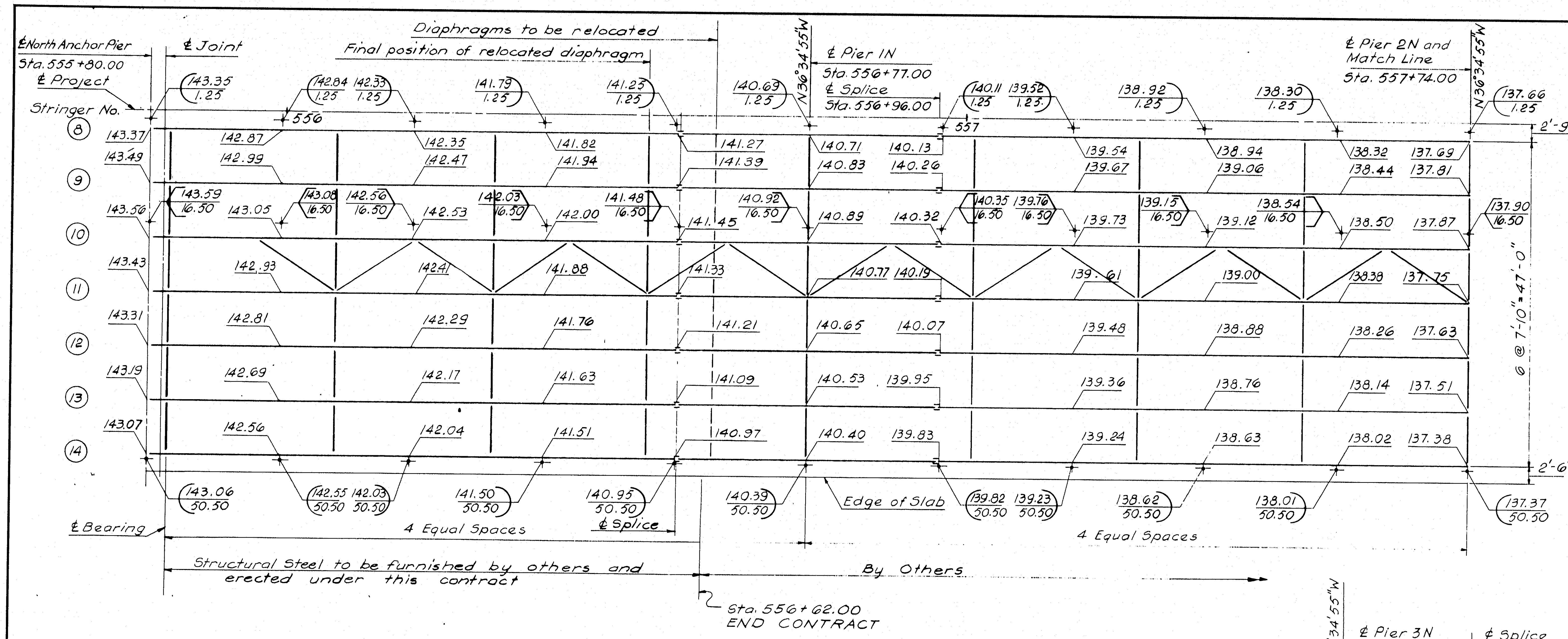

℄ North Anchor Pier
Sta. 555+80.00
℄ Project
Stringer No.
℄ Joint
Diaphragms to be relocated
Final position of relocated diaphragm
N 36°34'55"W
℄ Pier 1N
Sta. 556+77.00
℄ Splice
Sta. 556+96.00
℄ Pier 2N and Match Line
Sta. 557+74.00
556
557
2'-9½"
2'-6"
6 @ 7'-10" = 47'-0"
℄ Bearing
4 Equal Spaces
℄ Splice
Edge of Slab
4 Equal Spaces
Structural Steel to be furnished by others and erected under this contract
By Others
Sta. 556+62.00
END CONTRACT

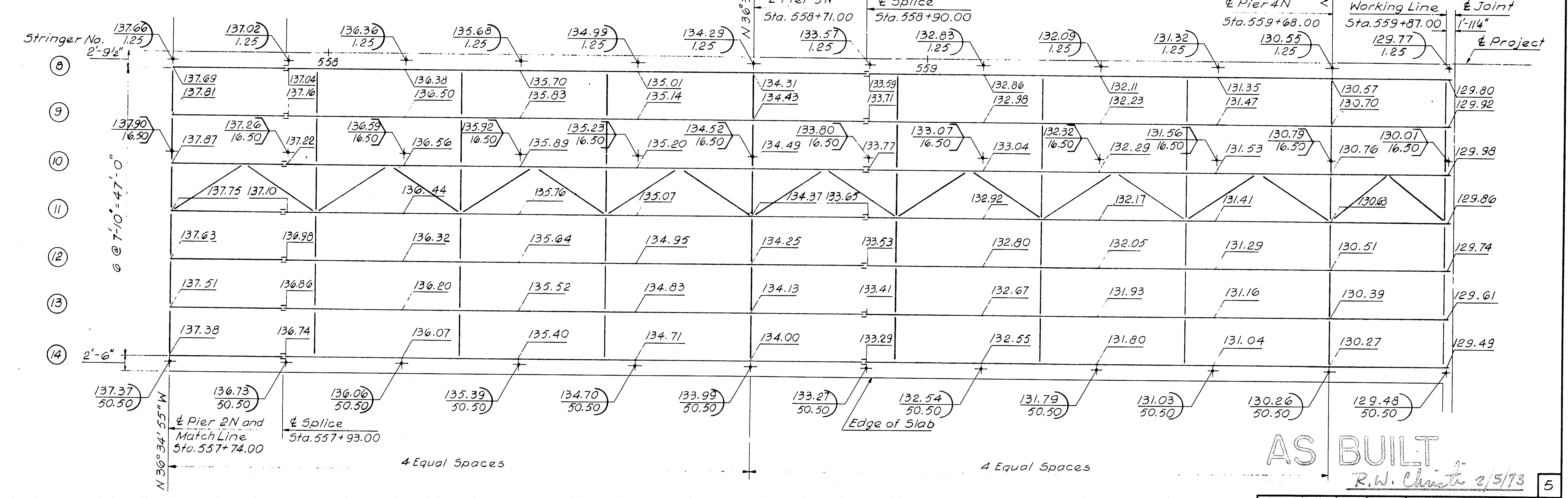

Stringer No.
2'-9½"
2'-6"
6 @ 7'-10" = 47'-0"
558
559
N 36°34'55"W
℄ Pier 3N
Sta. 558+71.00
℄ Splice
Sta. 558+90.00
℄ Pier 4N
Sta. 559+68.00
Working Line
Sta. 559+87.00
℄ Joint
1'-11¼"
℄ Project
℄ Pier 2N and Match Line
Sta. 557+74.00
℄ Splice
Sta. 557+93.00
Edge of Slab
4 Equal Spaces
4 Equal Spaces

Painting Note:
The remainder of the Maine Structural Steel is similar.

NOTE: (Approaches Only)
Elevations given are for top of wearing surface. Vertical distance from top of wearing surface to top of stringer web is 1'-1". Elevations are given for 5th points of stringer spans.
1'-1" & variable

STRINGER NUMBER	WEB PLATE	FLANGES							
		Sta. 555+80.00 to Sta. 556+58.00	Sta. 556+58.00 to Sta. 556+96.00	Sta. 556+96.00 to Sta. 557+55.00	Sta. 557+55.00 to Sta 557+93.00	Sta. 557+93.00 to Sta 558+52.00	Sta. 558+52.00 to Sta. 558+90.00	Sta. 558+90.00 to Sta. 559+49.00	Sta. 559+49.00 to Sta. 559+88.79
1-14	54 × ⅜	16 × 1⅛	16 × 1¾	16 × ¾	16 × 1⅜	16 × ¾	16 × 1½	16 × ¾	16 × 1¼
		Stringer Type "G"		Stringer Type "B-1"		Stringer Type "B-1"		Stringer Type "F-1"	

Exp. Joint — Splice — Splice — Splice — Splice — Exp. Joint

LEGEND:
131.79 ←Gutter Elevation
50.50 ←Gutter Offset
133.07 ←High Point Elevation
16.50 ←High Point Offset

AS BUILT
R. W. Christie 2/5/73

5

DESIGN –
TRACE – A. Tchenkeli
CHECK – B. Raley

BRIDGE NO. IN CHARGE OF – Richard W. Christie

NEW HAMPSHIRE
DEPARTMENT OF PUBLIC WORKS AND HIGHWAYS
AND
MAINE STATE HIGHWAY COMMISSION
INTERSTATE 95 BRIDGE
OVER
PISCATAQUA RIVER
BETWEEN
PORTSMOUTH, NEW HAMPSHIRE AND KITTERY, MAINE
MAINE APPROACH
FRAMING PLAN
STA. 555 + 80 TO STA. 559 + 87
SHEET 29 OF 54

HARDESTY & HANOVER
CONSULTING ENGINEERS
NEW YORK, N. Y.

129-124

B. P. R. REG. NO.	STATE	PROJECT NUMBER	SHEET NO.	TOTAL SHEETS
1	MAINE	I—95—1 (22) 16	30	54

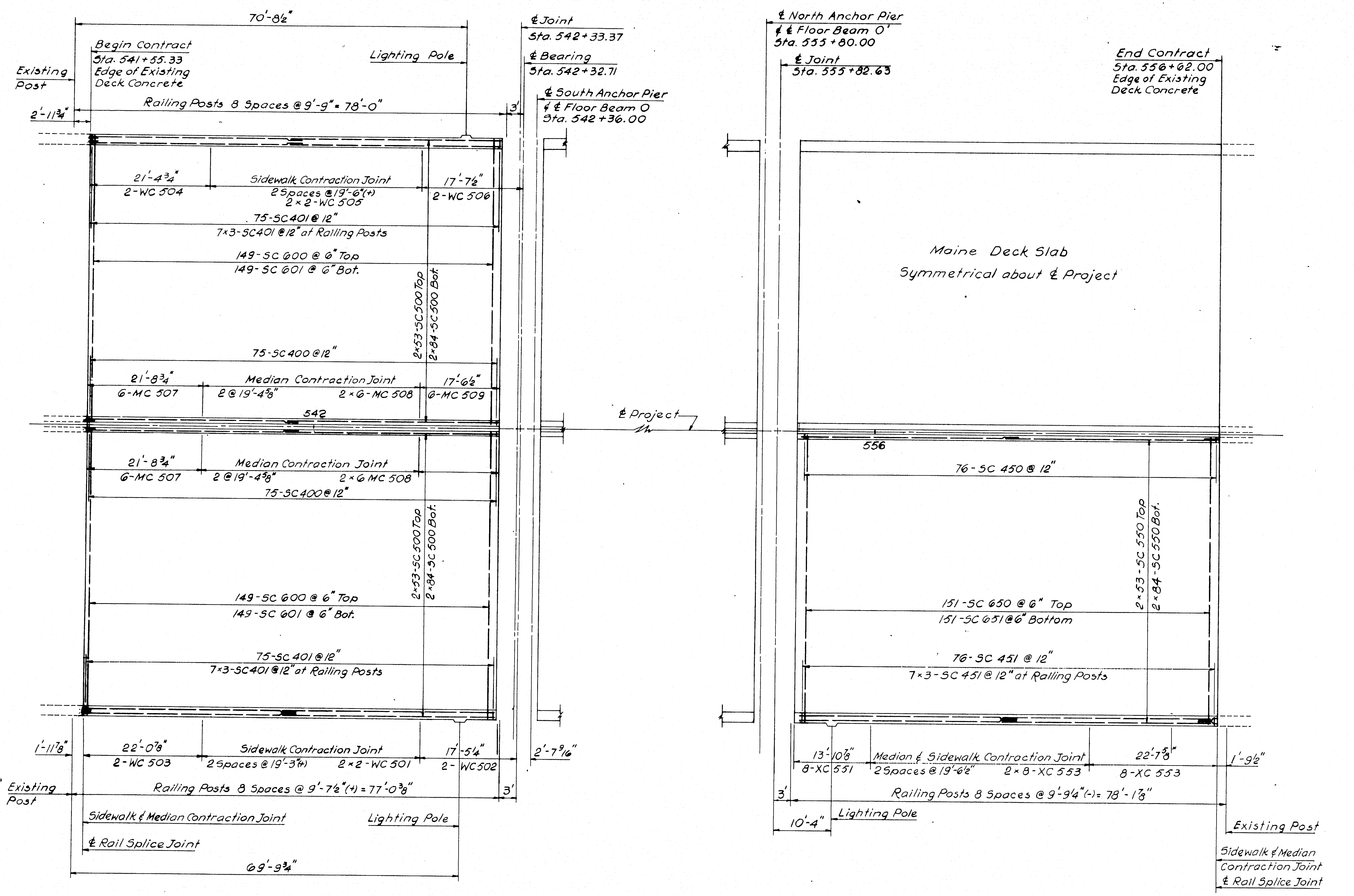
70'-8½"
℄ Joint
Sta. 542+33.37
Begin Contract
Sta. 541+55.33
Edge of Existing
Deck Concrete
Lighting Pole
Existing Post
℄ Bearing
Sta. 542+32.71
℄ South Anchor Pier
& ℄ Floor Beam O
Sta. 542+36.00
Railing Posts 8 Spaces @ 9'-9" = 78'-0"
2'-11¾"
3'
21'-4¾"
2-WC 504
Sidewalk Contraction Joint
2 Spaces @ 19'-6"(+)
2 × 2-WC 505
17'-7½"
2-WC 506
75-SC401 @ 12"
7×3-SC401 @ 12" at Railing Posts
149-SC 600 @ 6" Top
149-SC 601 @ 6" Bot.
2×53-SC500 Top
2×84-SC500 Bot.
75-SC400 @ 12"
21'-8¾"
6-MC 507
Median Contraction Joint
2 @ 19'-4⅝"
2 × 6-MC 508
17'-6½"
6-MC 509
542
℄ Project
21'-8¾"
6-MC 507
Median Contraction Joint
2 @ 19'-4⅝"
2 × 6 MC 508
75-SC400 @ 12"
2×53-SC500 Top
2×84-SC500 Bot.
149-SC 600 @ 6" Top
149-SC 601 @ 6" Bot.
75-SC 401 @ 12"
7×3-SC401 @ 12" at Railing Posts
1'-11⅞"
22'-0⅞"
2-WC 503
Sidewalk Contraction Joint
2 Spaces @ 19'-3"(+)
2 × 2-WC 501
17'-5¼"
2-WC502
2'-7 9/16"
Existing Post
Railing Posts 8 Spaces @ 9'-7½"(+) = 77'-0⅜"
3'
Sidewalk & Median Contraction Joint
Lighting Pole
℄ Rail Splice Joint
69'-9¾"
℄ North Anchor Pier
& ℄ Floor Beam O'
Sta. 555+80.00
℄ Joint
Sta. 555+82.63
End Contract
Sta. 556+62.00
Edge of Existing
Deck Concrete
Maine Deck Slab
Symmetrical about ℄ Project
556
76-SC 450 @ 12"
2×53-SC 550 Top
2×84-SC 550 Bot.
151-SC 650 @ 6" Top
151-SC 651 @ 6" Bottom
76-SC 451 @ 12"
7×3-SC 451 @ 12" at Railing Posts
13'-10⅞"
8-XC 551
Median & Sidewalk Contraction Joint
2 Spaces @ 19'-6½"
2 × 8-XC 553
22'-7⅝"
8-XC 553
1'-9½"
3'
Railing Posts 8 Spaces @ 9'-9¼"(-) = 78'-1⅞"
10'-4"
Lighting Pole
Existing Post
Sidewalk & Median
Contraction Joint
℄ Rail Splice Joint

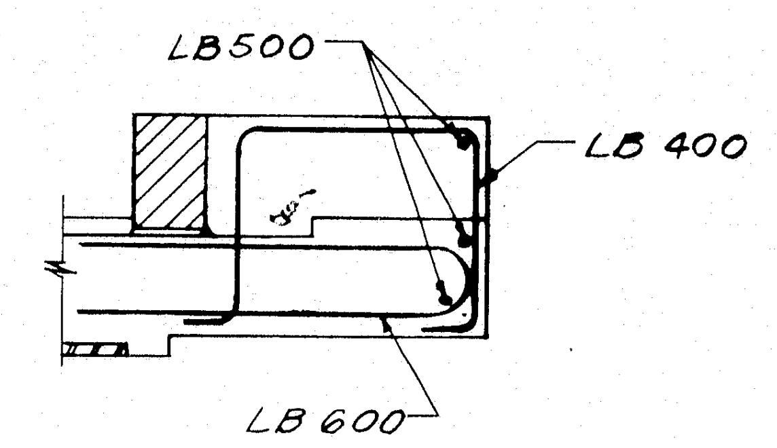
LB500
LB 400
LB 600

SECTION A-A

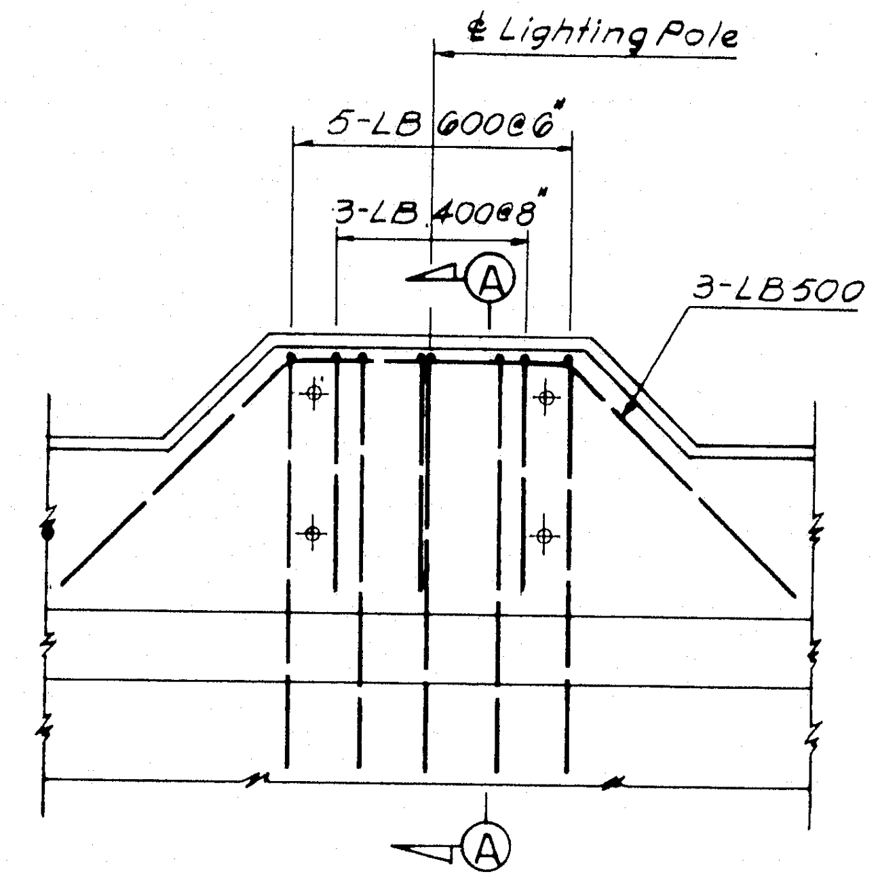
℄ Lighting Pole
5-LB 600 @ 6"
3-LB 400 @ 8"
3-LB500
A
A

PLAN
LIGHTING POLE PLATFORM
Scale: ¾" = 1'-0"

NOTE:
Splice Bars for splicing to existing Railing to be furnished under this Contract.

AS BUILT
R.W. Christie 2/5/73

5

DESIGN — J. Fedun
TRACE — A. Tchenkeli
CHECK — A. W. [illegible]

BRIDGE NO.
IN CHARGE OF — Richard W. Christie

NEW HAMPSHIRE
DEPARTMENT OF PUBLIC WORKS AND HIGHWAYS
AND
MAINE STATE HIGHWAY COMMISSION
INTERSTATE 95 BRIDGE
OVER
PISCATAQUA RIVER
BETWEEN
PORTSMOUTH, NEW HAMPSHIRE AND KITTERY, MAINE
APPROACHES

DECK SLAB LAYOUT

SHEET 30 OF 54

HARDESTY & HANOVER
CONSULTING ENGINEERS
NEW YORK, N. Y.

129-125

B. P. R. REG. NO.	STATE	PROJECT NUMBER	SHEET NO.	TOTAL SHEETS
1	MAINE	I—95—1(22)16	31	54

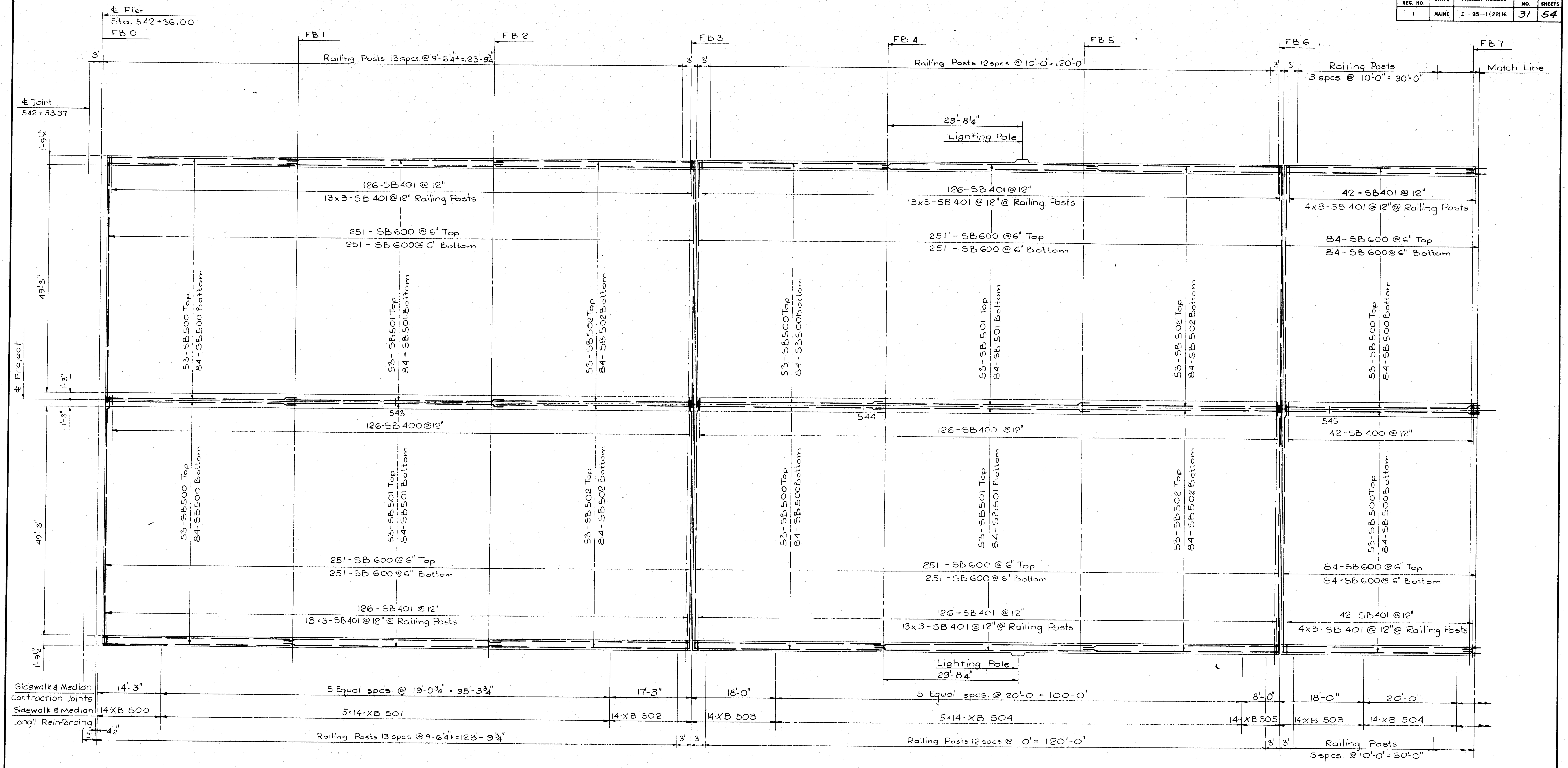

℄ Pier
Sta. 542 + 36.00
FB 0
FB 1
FB 2
FB 3
FB 4
FB 5
FB 6
FB 7
Match Line
℄ Joint
542 + 33.37
3'
Railing Posts 13 spcs. @ 9'-6¼" = 123'-9¾"
Railing Posts 12 spcs @ 10'-0" = 120'-0"
Railing Posts
3 spcs. @ 10'-0" = 30'-0"
29'-8¼"
Lighting Pole
1'-9½"
49'-3"
1'-3"
℄ Project
126-SB401 @ 12"
13x3-SB 401 @ 12" Railing Posts
13x3-SB 401 @ 12" @ Railing Posts
42-SB401 @ 12"
4x3-SB 401 @ 12" @ Railing Posts
251-SB600 @ 6" Top
251-SB 600 @ 6" Bottom
84-SB600 @ 6" Top
84-SB 600 @ 6" Bottom
53-SB500 Top
84-SB500 Bottom
53-SB501 Top
84-SB501 Bottom
53-SB502 Top
84-SB502 Bottom
543
544
545
126-SB400 @ 12"
42-SB 400 @ 12"
Sidewalk & Median
Contraction Joints
Sidewalk & Median
Long'l Reinforcing
14'-3"
5 Equal spcs. @ 19'-0¾" = 95'-3¾"
17'-3"
18'-0"
5 Equal spcs. @ 20'-0 = 100'-0"
8'-0"
20'-0"
14XB 500
5×14-XB 501
14-XB 502
14-XB 503
5×14-XB 504
14-XB 505
14XB 503
14-XB 504
4½"
Railing Posts 13 spcs @ 9'-6¼" = 123'-9¾"
Railing Posts 12 spcs @ 10' = 120'-0"
3spcs. @ 10'-0" = 30'-0"

AS BUILT
R. W. Christie 2/5/73

5

DESIGN — [illegible]
TRACE — L. Vacco
CHECK — [illegible]

BRIDGE NO.
IN CHARGE OF — Richard W. Christie

NEW HAMPSHIRE
DEPARTMENT OF PUBLIC WORKS AND HIGHWAYS
AND
MAINE STATE HIGHWAY COMMISSION
INTERSTATE 95 BRIDGE
OVER
PISCATAQUA RIVER
BETWEEN
PORTSMOUTH, NEW HAMPSHIRE AND KITTERY, MAINE

RIVER BRIDGE

DECK SLAB LAYOUT
END SPAN

SHEET 31 OF 54

HARDESTY & HANOVER
CONSULTING ENGINEERS
NEW YORK, N. Y.

129-126

B. P. R. REG. NO.	STATE	PROJECT NUMBER	SHEET NO.	TOTAL SHEETS
1	MAINE	I-95-1(22)16	32	54

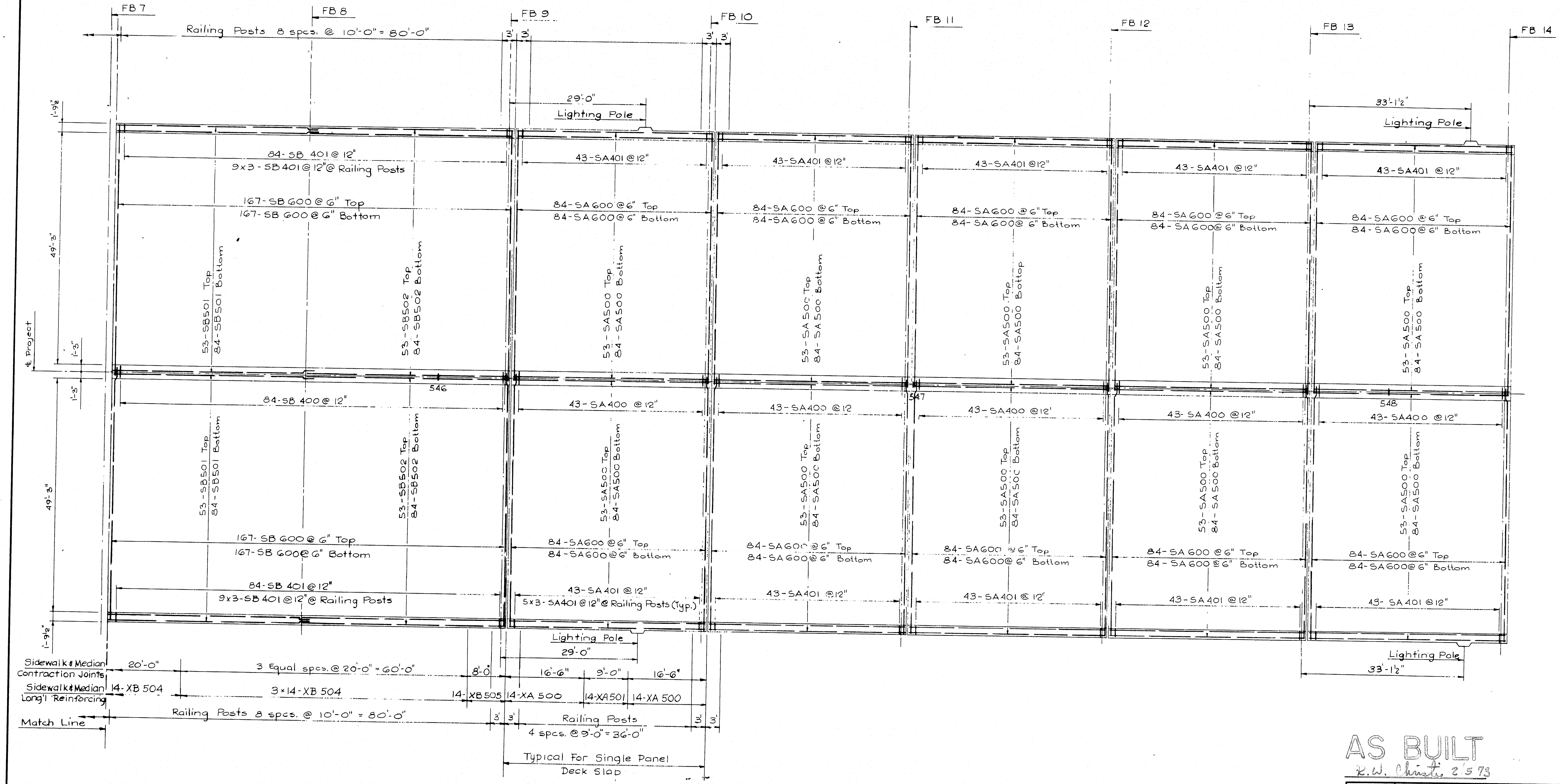
FB 7
FB 8
FB 9
FB 10
FB 11
FB 12
FB 13
FB 14
Railing Posts 8 spcs. @ 10'-0" = 80'-0"
3'
3'
29'-0"
Lighting Pole
33'-1½"
Lighting Pole
1'-9½"
49'-3"
1'-3"
℄ Project
1'-3"
49'-3"
1'-9½"
84-SB 401 @ 12"
9x3-SB 401 @ 12" @ Railing Posts
167-SB 600 @ 6" Top
167-SB 600 @ 6" Bottom
53-SB501 Top
84-SB501 Bottom
53-SB502 Top
84-SB502 Bottom
43-SA401 @ 12"
84-SA600 @ 6" Top
84-SA600 @ 6" Bottom
53-SA500 Top
84-SA500 Bottom
546
547
548
84-SB 400 @ 12"
43-SA400 @ 12"
84-SA600 @ 6" Top
84-SA600 @ 6" Bottom
43-SA401 @ 12"
5x3-SA401 @ 12" @ Railing Posts (Typ.)
Lighting Pole
29'-0"
Lighting Pole
33'-1½"
Sidewalk & Median Contraction Joints
20'-0"
3 Equal spcs. @ 20'-0" = 60'-0"
8'-0"
16'-6"
9'-0"
16'-6"
Sidewalk & Median Long'l Reinforcing
14-XB 504
3x14-XB 504
14-XB 505
14-XA 500
14-XA 501
14-XA 500
Match Line
Railing Posts 8 spcs. @ 10'-0" = 80'-0"
3'
3'
Railing Posts
4 spcs. @ 9'-0" = 36'-0"
3'
3'
Typical For Single Panel Deck Slab

AS BUILT
R. W. Christie 2/5/73

5

DESIGN – J. F.
TRACE – L. Vasso
CHECK – L. Ulijana

BRIDGE NO.
IN CHARGE OF – Richard W. Christie

NEW HAMPSHIRE
DEPARTMENT OF PUBLIC WORKS AND HIGHWAYS
AND
MAINE STATE HIGHWAY COMMISSION
INTERSTATE 95 BRIDGE
OVER
PISCATAQUA RIVER
BETWEEN
PORTSMOUTH, NEW HAMPSHIRE AND KITTERY, MAINE

RIVER BRIDGE

DECK SLAB LAYOUT I
CENTER SPAN

SHEET 32 OF 54

HARDESTY & HANOVER
CONSULTING ENGINEERS
NEW YORK, N. Y.

129-127

B. P. R. REG. NO.	STATE	PROJECT NUMBER	SHEET NO.	TOTAL SHEETS
1	MAINE	I—95—1(22) 16	33	54

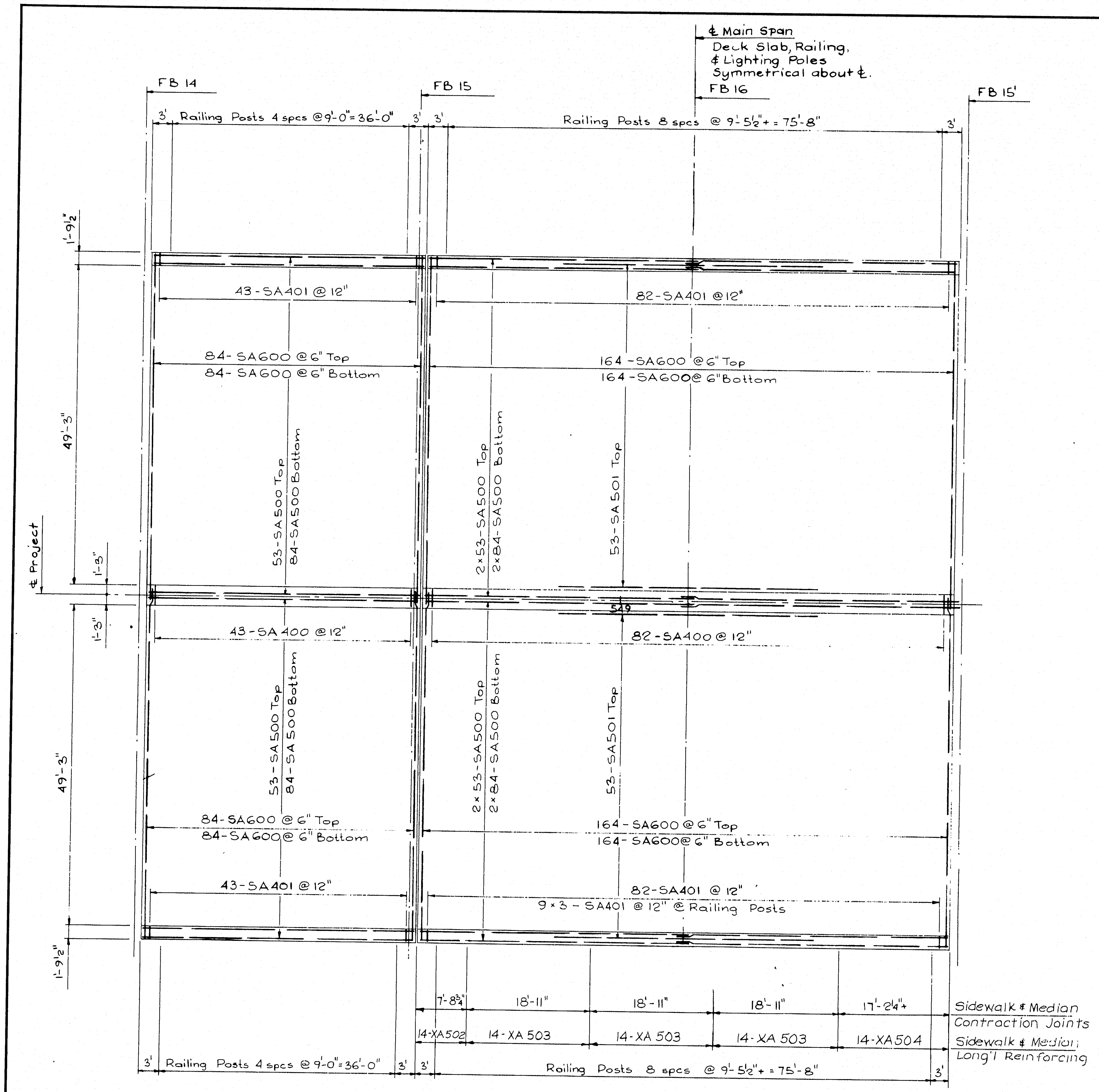
℄ Main Span
Deck Slab, Railing, & Lighting Poles Symmetrical about ℄.
FB 14
FB 15
FB 16
FB 15'
3' Railing Posts 4 spcs @ 9'-0" = 36'-0" 3'
3' Railing Posts 8 spcs @ 9'-5½"± = 75'-8" 3'
1'-9½"
49'-3"
1'-3"
℄ Project
1'-3"
49'-3"
1'-9½"
43-SA401 @ 12"
82-SA401 @ 12"
84-SA600 @ 6" Top
84-SA600 @ 6" Bottom
164-SA600 @ 6" Top
164-SA600 @ 6" Bottom
53-SA500 Top
84-SA500 Bottom
2×53-SA500 Top
2×84-SA500 Bottom
53-SA501 Top
S49
43-SA400 @ 12"
82-SA400 @ 12"
53-SA500 Top
84-SA500 Bottom
2×53-SA500 Top
2×84-SA500 Bottom
53-SA501 Top
84-SA600 @ 6" Top
84-SA600 @ 6" Bottom
164-SA600 @ 6" Top
164-SA600 @ 6" Bottom
43-SA401 @ 12"
82-SA401 @ 12"
9×3-SA401 @ 12" @ Railing Posts
7'-8¾"
18'-11"
18'-11"
18'-11"
17'-2¼"±
Sidewalk & Median Contraction Joints
14-XA502
14-XA503
14-XA503
14-XA503
14-XA504
Sidewalk & Median Long'l Reinforcing
3' Railing Posts 4 spcs @ 9'-0" = 36'-0" 3'
3' Railing Posts 8 spcs @ 9'-5½"± = 75'-8" 3'

AS BUILT
R.W. Christie 2/5/73

5

DESIGN — J. Fedun
TRACE — L. Vasso
CHECK —

BRIDGE NO.
IN CHARGE OF — Richard W. Christie

NEW HAMPSHIRE
DEPARTMENT OF PUBLIC WORKS AND HIGHWAYS
AND
MAINE STATE HIGHWAY COMMISSION

INTERSTATE 95 BRIDGE
OVER
PISCATAQUA RIVER
BETWEEN
PORTSMOUTH, NEW HAMPSHIRE AND KITTERY, MAINE

RIVER BRIDGE

DECK SLAB LAYOUT II
CENTER SPAN

SHEET 33 OF 54

HARDESTY & HANOVER
CONSULTING ENGINEERS
NEW YORK, N. Y.

129-128

B. P. R. REG. NO.	STATE	PROJECT NUMBER	SHEET NO.	TOTAL SHEETS
1	MAINE	I-95-1(22)16	34	54

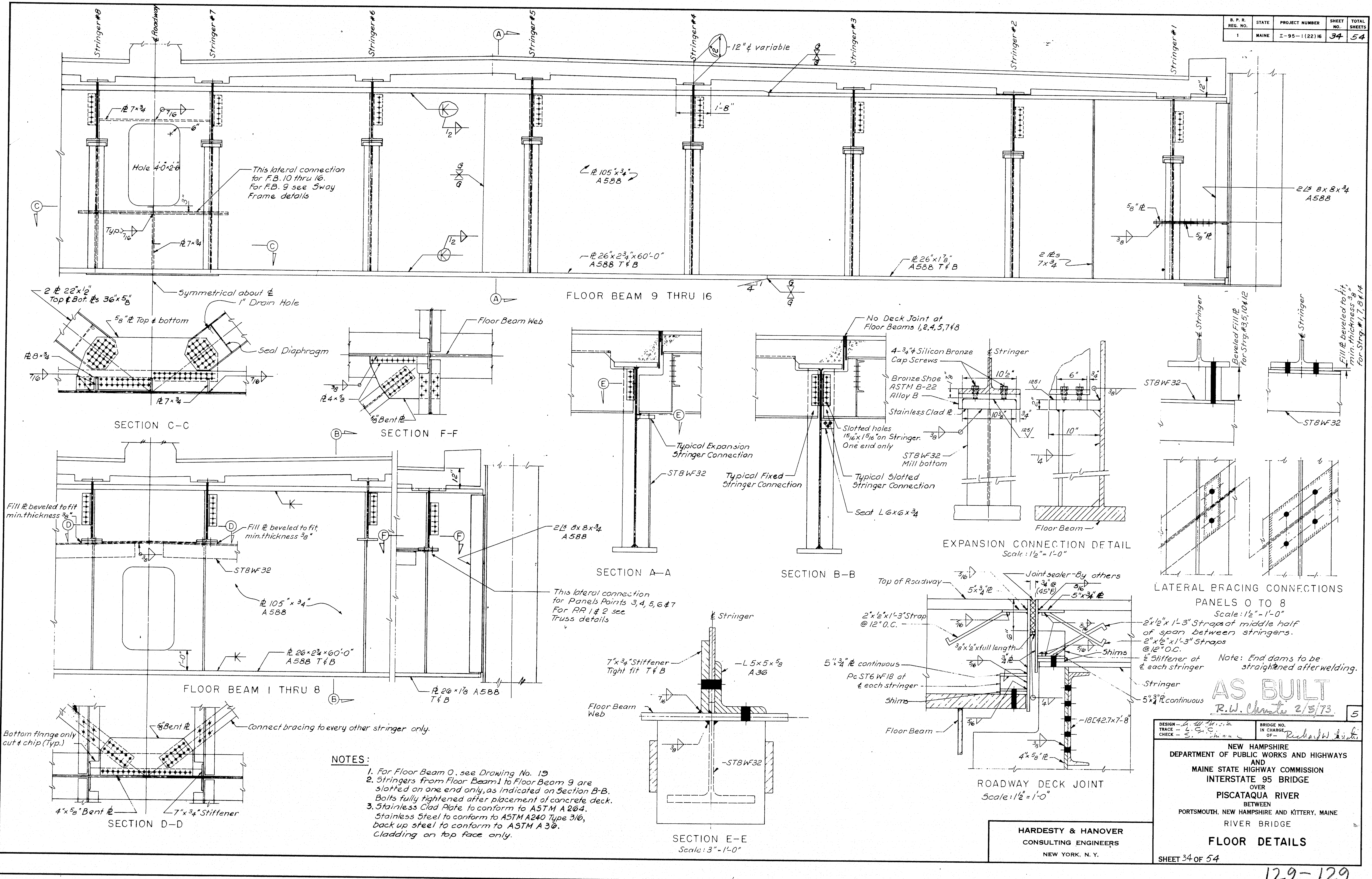

Stringer #8
℄ Roadway
Stringer #7
Stringer #6
Stringer #5
Stringer #4
Stringer #3
Stringer #2
Stringer #1
12" ℄ variable
Hole 4'-0"×2'-6"
This lateral connection for F.B. 10 thru 16. For F.B. 9 see Sway Frame details
℄ 105"×¾" A588
2∠s 8×8×¾ A588
℄ 26"×2¾"×60'-0" A588 T & B
℄ 26"×1⅞" A588 T & B
2 ℄s 7×¾
Symmetrical about ℄
FLOOR BEAM 9 THRU 16
2 ℄ 22"×1" Top & Bot. ℄s 36"×⅝"
1" Drain Hole
⅝" ℄ Top & bottom
Seal Diaphragm
SECTION C-C
Floor Beam Web
⅝" Bent ℄
SECTION F-F
Typical Expansion Stringer Connection
ST8WF32
SECTION A-A
No Deck Joint at Floor Beams 1,2,4,5,7 & 8
Typical Fixed Stringer Connection
Slotted holes 15/16"×1 5/16" on Stringer. One end only
Typical Slotted Stringer Connection
Seat L6×6×¾
SECTION B-B
4-¾" ⌀ Silicon Bronze Cap Screws
Bronze Shoe ASTM B-22 Alloy B
Stainless Clad ℄
ST8WF32 Mill bottom
℄ Stringer
Floor Beam
EXPANSION CONNECTION DETAIL
Scale: 1½" = 1'-0"
Beveled Fill ℄ for Strg. #3,5,10 & 12
Fill ℄ beveled to fit min. thickness ⅜" for Strg. #1,7,8 & 14
LATERAL BRACING CONNECTIONS
PANELS 0 TO 8
Scale: 1½" - 1'-0"
Fill ℄ beveled to fit min. thickness ⅜"
This lateral connection for Panels Points 3,4,5,6 & 7 For PP 1 & 2 see Truss details
FLOOR BEAM 1 THRU 8
Bottom flange only cut & chip (Typ.)
Connect bracing to every other stringer only.
4"×⅝" Bent ℄
7"×¾" Stiffener
SECTION D-D
7"×¾" Stiffener Tight fit T & B
L5×5×⅝ A36
SECTION E-E
Scale: 3" - 1'-0"
Top of Roadway
Joint sealer - By others
2"×½"×1'-3" Strap @ 12" O.C.
2"×½"×1'-3" Straps at middle half of span between stringers.
5"×¾" ℄ continuous
Pc ST6WF18 at ℄ each stringer
Shims
½" Stiffener at ℄ each stringer
18 [42.7×7'-8"
4"×⅝" ℄
ROADWAY DECK JOINT
Scale: 1½" = 1'-0"

Note: End dams to be straightened after welding.

NOTES:

1. For Floor Beam 0, see Drawing No. 19
2. Stringers from Floor Beam 1 to Floor Beam 9 are slotted on one end only, as indicated on Section B-B. Bolts fully tightened after placement of concrete deck.
3. Stainless Clad Plate to conform to ASTM A 264. Stainless Steel to conform to ASTM A240 Type 316, back up steel to conform to ASTM A 36. Cladding on top face only.

AS BUILT
R. W. Christie 2/5/73

5

DESIGN –
TRACE – L. C. C.
CHECK –

BRIDGE NO.
IN CHARGE OF – Richard W. Christie

HARDESTY & HANOVER
CONSULTING ENGINEERS
NEW YORK, N. Y.

NEW HAMPSHIRE
DEPARTMENT OF PUBLIC WORKS AND HIGHWAYS
AND
MAINE STATE HIGHWAY COMMISSION
INTERSTATE 95 BRIDGE
OVER
PISCATAQUA RIVER
BETWEEN
PORTSMOUTH, NEW HAMPSHIRE AND KITTERY, MAINE
RIVER BRIDGE

FLOOR DETAILS

SHEET 34 OF 54

129-129

B. P. R. REG. NO.	STATE	PROJECT NUMBER	SHEET NO.	TOTAL SHEETS
1	MAINE	I-95-1(22)16	35	54

Note: Steel for Strut At L7 is A36

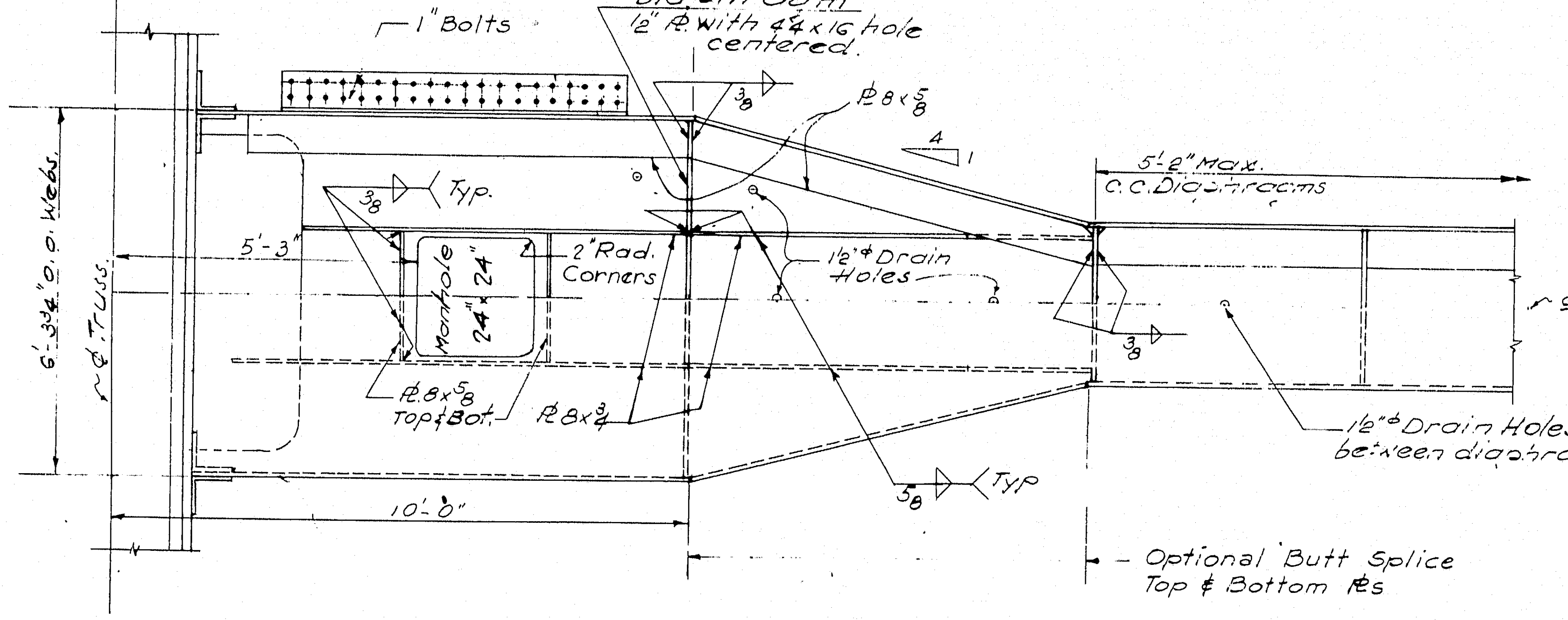
1" Bolts
Diaphragm ½" ℘ with 44x16 hole centered.
℘ 8x⅝
4 1
5'-2" Max. C.C. Diaphragms
6'-3¾" O.O. Webs
¢ Truss
5'-3"
Manhole 24"x24"
2" Rad. Corners
1½"φ Drain Holes
¢ Strut
℘ 8x⅝ Top & Bot.
℘ 8x¾
1½"φ Drain Holes between diaphragms.
⅜ Typ.
⅝ Typ
10'-0"
Optional Butt Splice Top & Bottom ℘s

PLAN OF STRUT AT L7

Scale ½"=1'-0"

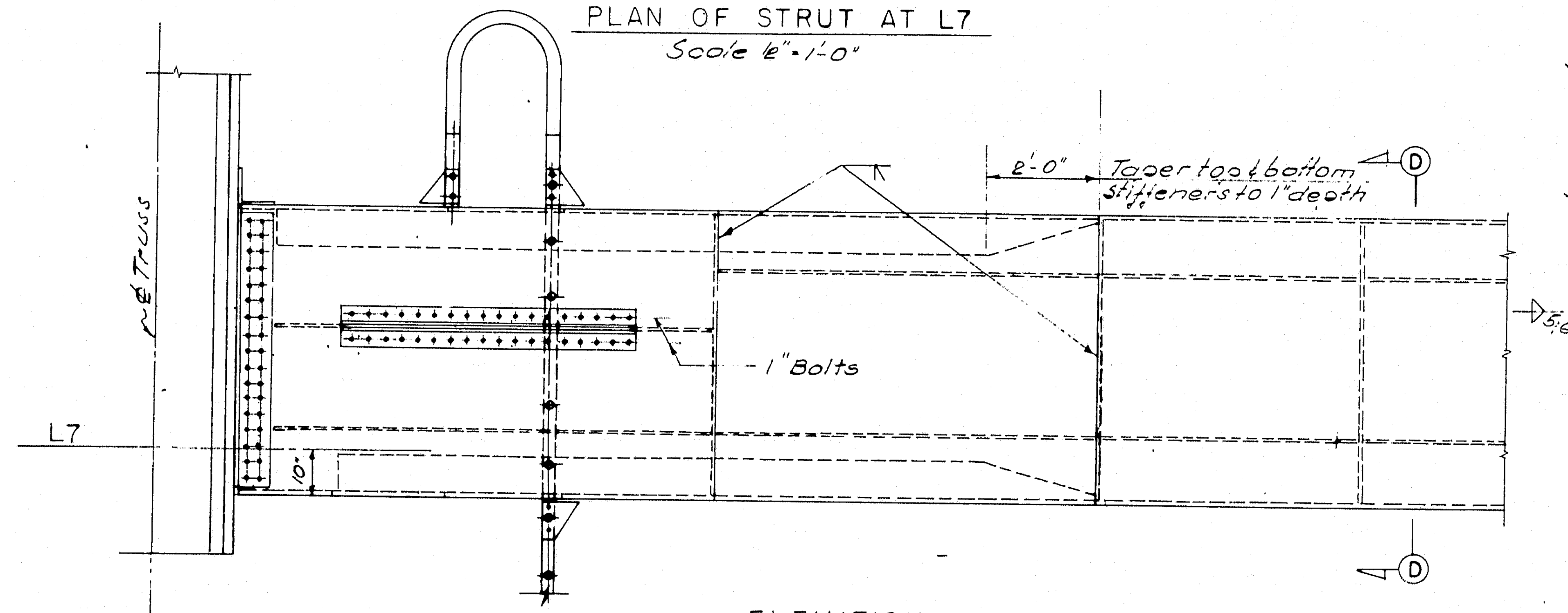
¢ Truss
L7
2'-0"
Taper top & bottom stiffeners to 1' depth
D
1" Bolts
10"

ELEVATION - STRUT AT L7

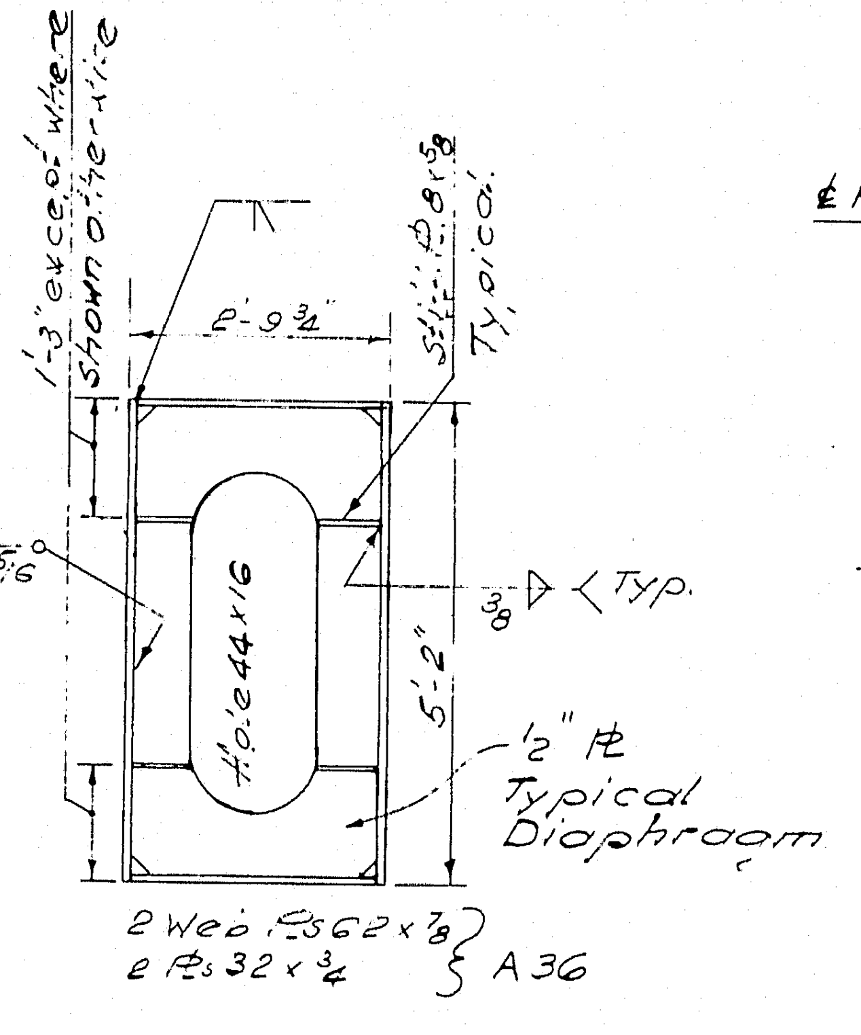
1'-3" except where shown otherwise
Stiff. ℘ 8x⅝ Typical
2'-9¾"
5/16
Hole 44x16
⅜ Typ.
5'-2"
½" ℘ Typical Diaphragm
2 Web ℘s 62x⅞
2 ℘s 32x¾
A36

SECTION D-D

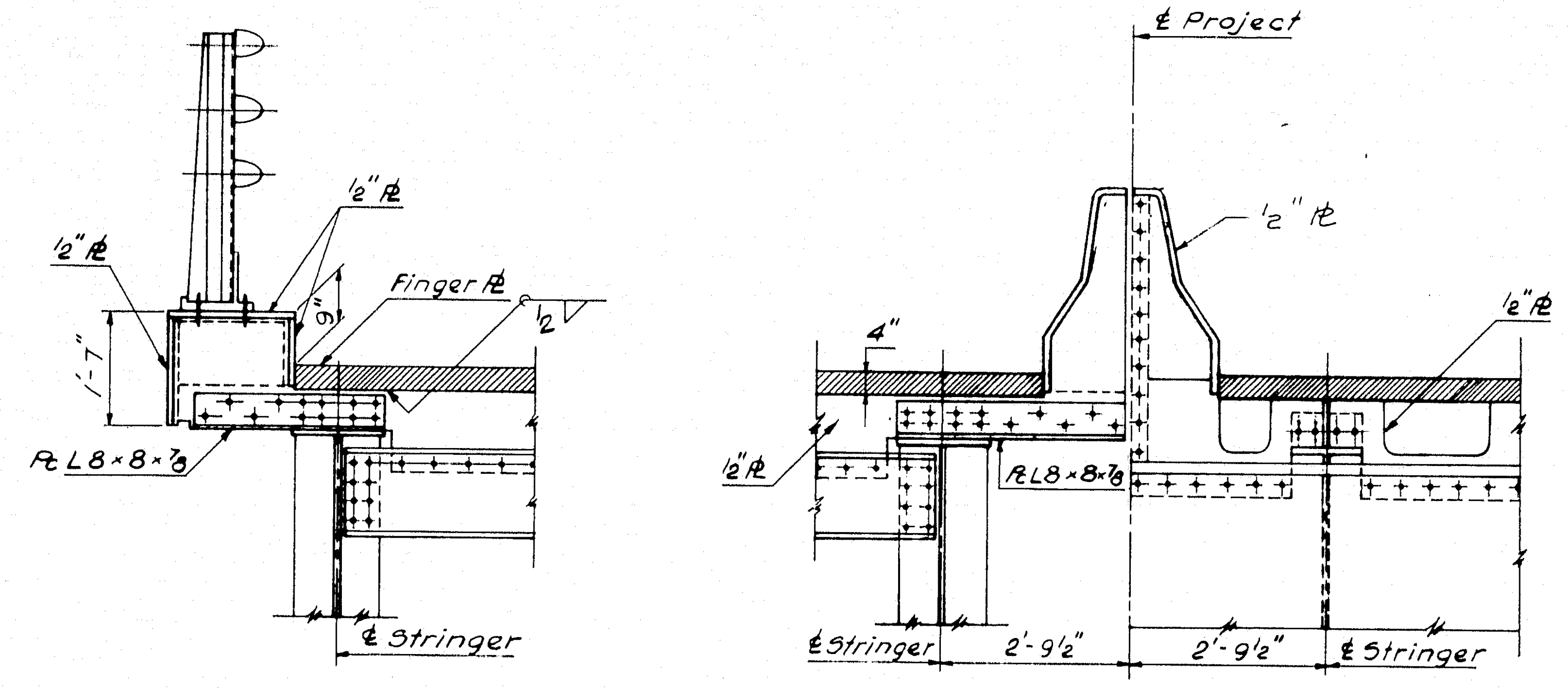
½" ℘
1'-7"
Finger ℘
℘ L8x8x⅞
¢ Stringer
¢ Project
½" ℘
4"
¢ Stringer
2'-9½"
2'-9½"
¢ Stringer

SECTION A-A

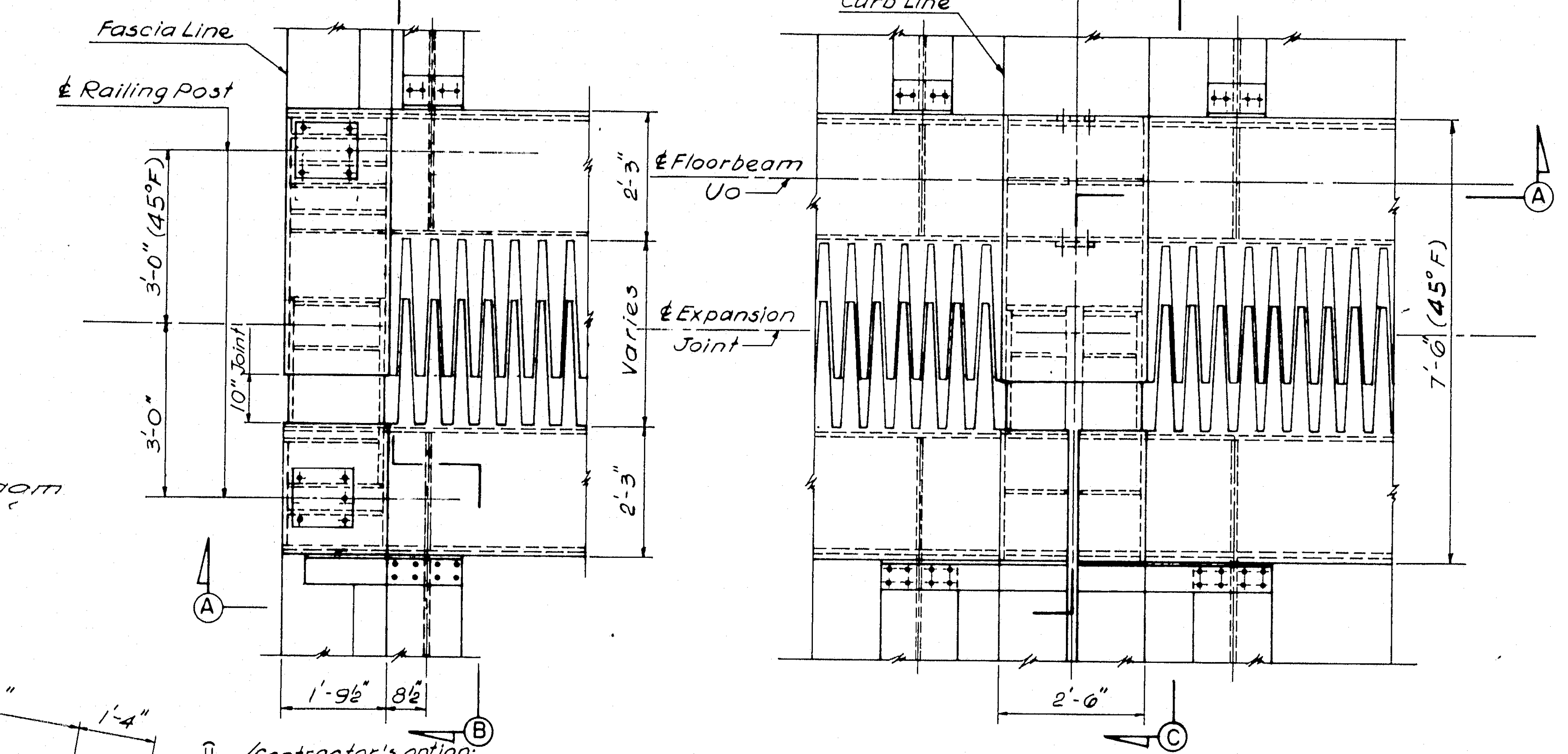
B
Fascia Line
¢ Railing Post
2'-3"
3'-0" (45°F)
10" Joint
3'-0"
Varies
2'-3"
¢ Floorbeam U0
¢ Expansion Joint
A
1'-9½"
8½"
C
Curb Line
7'-0" (45°F)
2'-6"

PLAN

EXPANSION JOINT AT U0

Scale: ½"=1'-0"

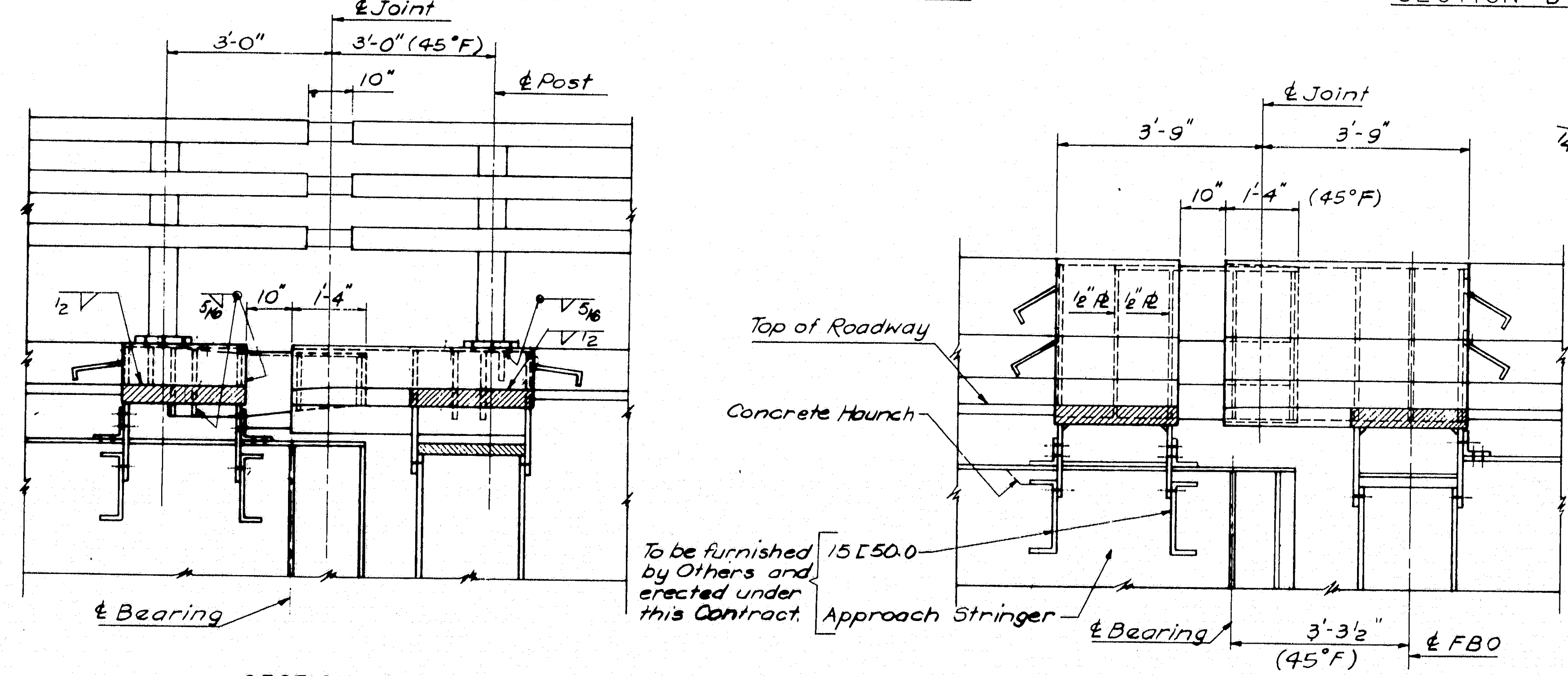
¢ Joint
3'-0"
3'-0" (45°F)
10"
¢ Post
1'-4"
5/16
½
¢ Bearing
¢ Joint
3'-9"
3'-9"
10"
1'-4" (45°F)
Top of Roadway
Concrete Haunch
To be furnished by Others and erected under this Contract.
15 [50.0
Approach Stringer
¢ Bearing
3'-3½" (45°F)
¢ FBO

SECTION B-B

SECTION C-C

EXPANSION JOINT AT U0

Scale: ½"=1'-0"

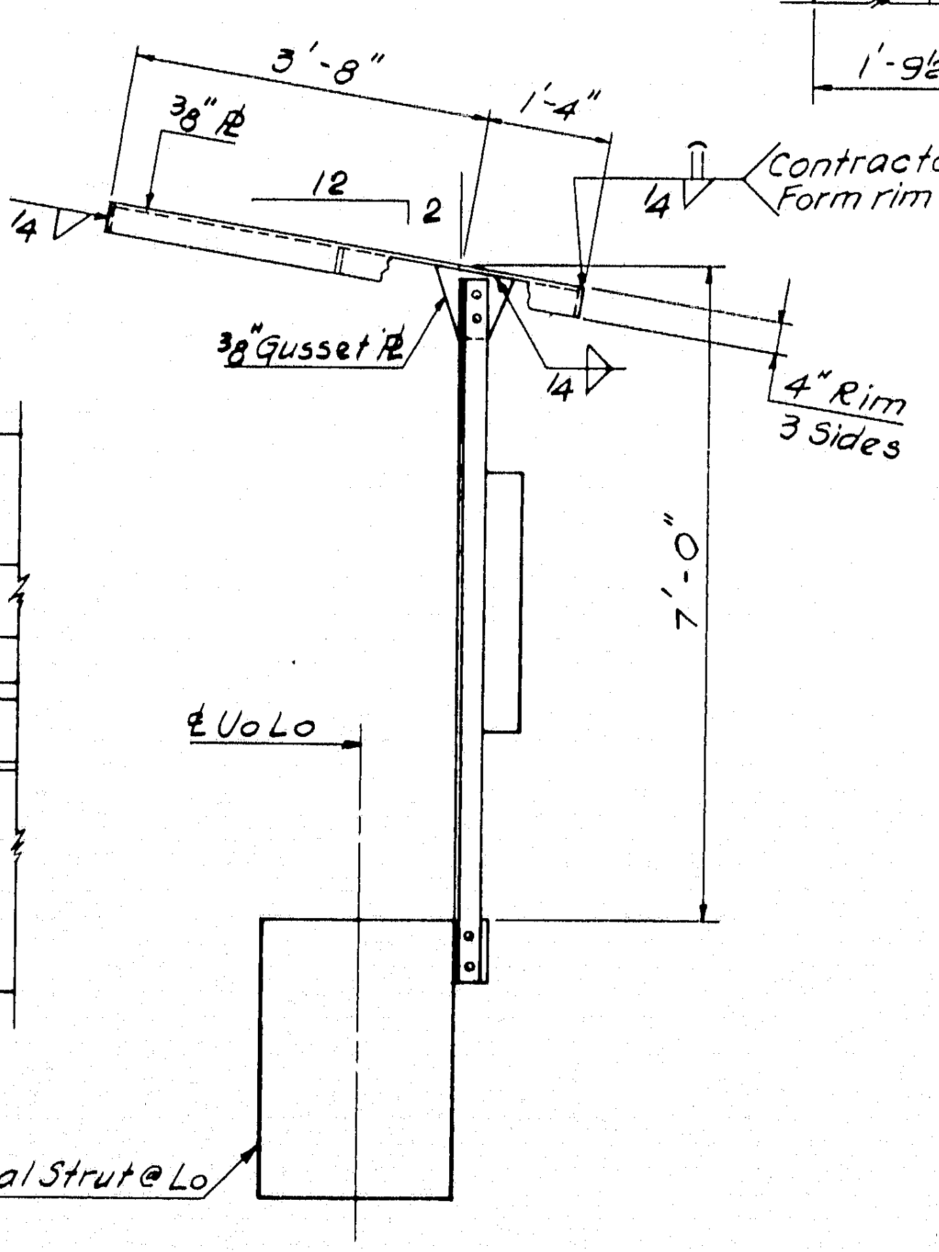
3'-8"
⅜" ℘
1'-4"
12
2
¼
Contractor's option: Form rim by bending
⅜" Gusset ℘
4" Rim 3 Sides
7'-0"
¢ UoLo
Lateral Strut @ Lo

ROOF FOR ELECTRICAL PANELS

Scale: ½"=1'-0"

AS BUILT
R. W. Christie 2/5/73

5

DESIGN — Alex Ingwoseliy
TRACE — A. Tchamkeli
CHECK — S. Nishimura

BRIDGE NO.
IN CHARGE OF — Richard W. Christie

NEW HAMPSHIRE
DEPARTMENT OF PUBLIC WORKS AND HIGHWAYS
AND
MAINE STATE HIGHWAY COMMISSION
INTERSTATE 95 BRIDGE
OVER
PISCATAQUA RIVER
BETWEEN
PORTSMOUTH, NEW HAMPSHIRE AND KITTERY, MAINE
RIVER BRIDGE

STRUT AT L7

SHEET 35 OF 54

HARDESTY & HANOVER
CONSULTING ENGINEERS
NEW YORK, N. Y.

129-130

B. P. R. REG. NO.	STATE	PROJECT NUMBER	SHEET NO.	TOTAL SHEETS
1	MAINE	I-95-1(22)16	36	54

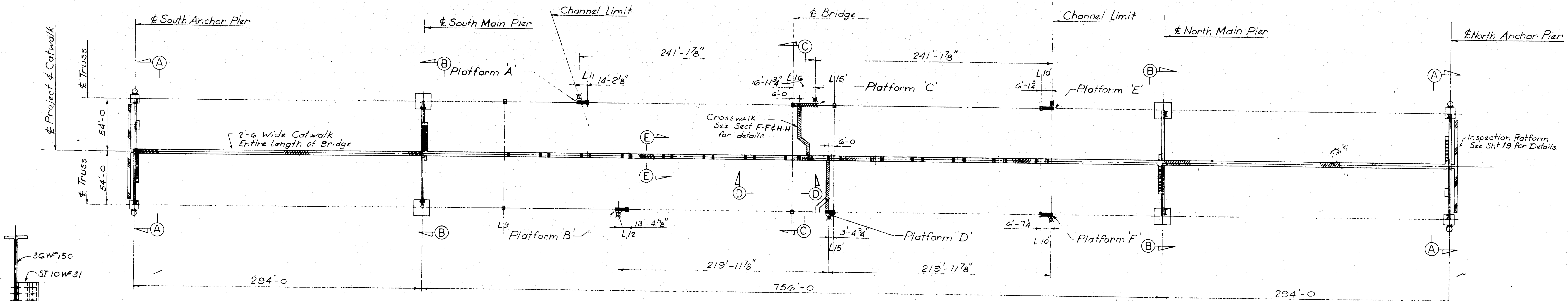

℄ South Anchor Pier
℄ South Main Pier
Channel Limit
℄ Bridge
Channel Limit
℄ North Main Pier
℄ North Anchor Pier
℄ Project & ℄ Catwalk
℄ Truss
54'-0
54'-0
241'-1⅞"
241'-1⅞"
Platform 'A'
L11 14'-2⅝"
16'-11⅞" L16
6'-0
L15'
Platform 'C'
6'-1¾" L10'
Platform 'E'
2'-6 Wide Catwalk Entire Length of Bridge
Crosswalk See Sect. F-F & H-H for details
6'-0
Inspection Platform See Sht. 19 for Details
L9
Platform 'B'
L12 13'-4⅝"
3'-4¾"
L15'
Platform 'D'
6'-7¼"
L10'
Platform 'F'
219'-11⅞"
219'-11⅞"
294'-0
756'-0
294'-0

PLAN

SCALE: 1" = 50'-0

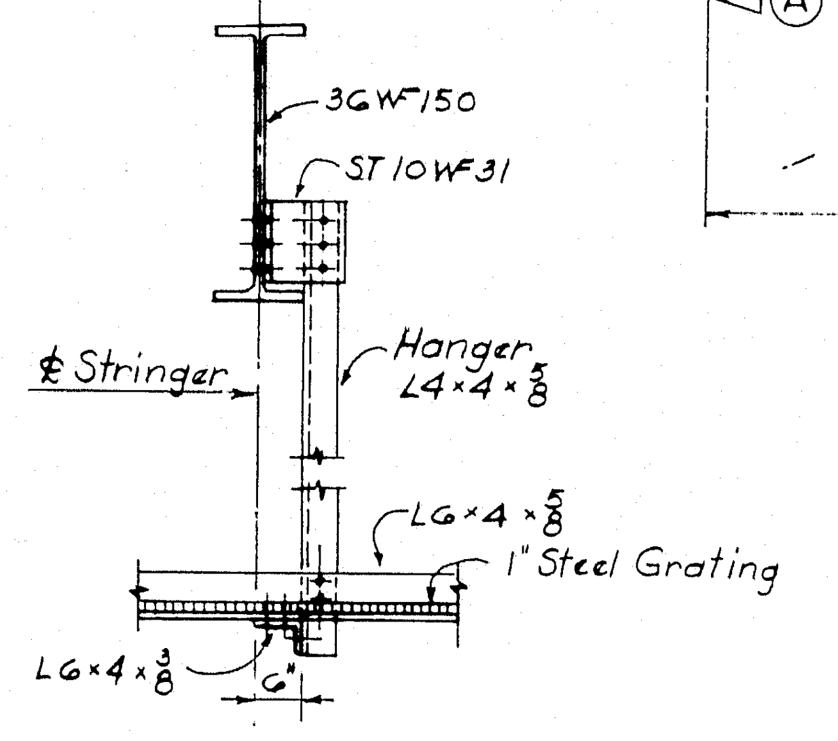

36WF150
ST10WF31
℄ Stringer
Hanger L4×4×⅝
L6×4×⅝
1" Steel Grating
L6×4×⅜
6"

SECTION H-H

SCALE 2" = 1'-0"

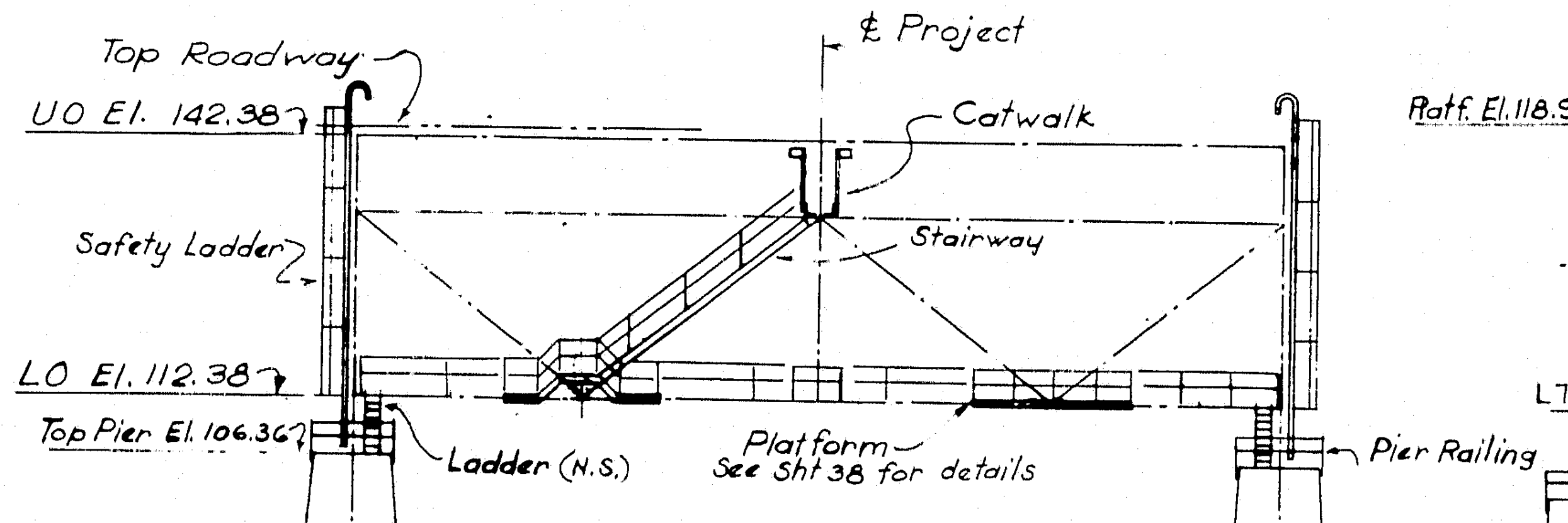

℄ Project
Top Roadway
U0 El. 142.38
Catwalk
Safety Ladder
Stairway
L0 El. 112.38
Top Pier El. 106.36
Ladder (N.S.)
Platform See Sht 38 for details
Pier Railing

SECTION A-A

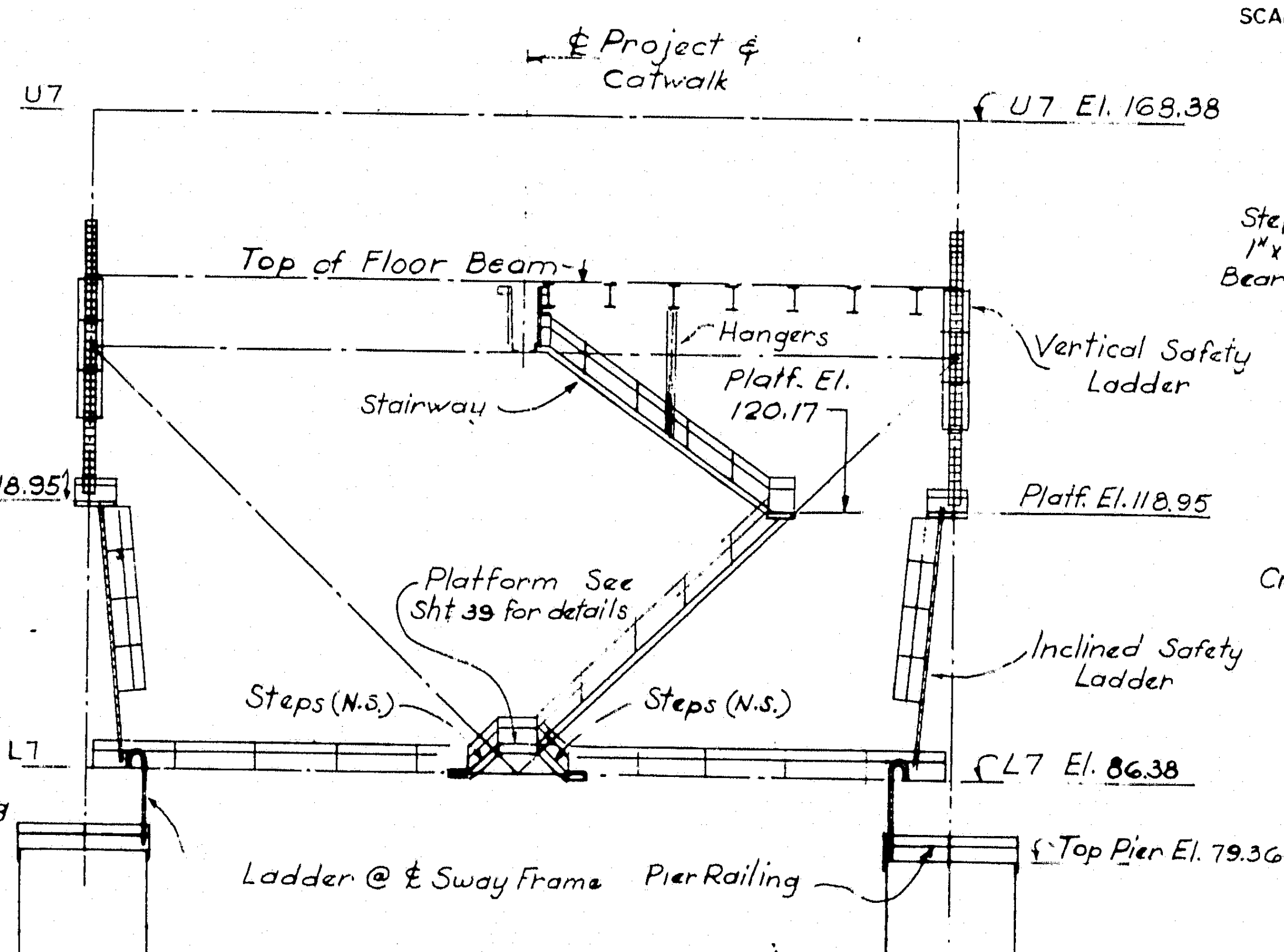

℄ Project & Catwalk
U7
U7 El. 168.38
Top of Floor Beam
Hangers
Vertical Safety Ladder
Stairway
Platf. El. 120.17
Platf. El. 118.95
Platf. El. 118.95
Platform See Sht 38 for details
Inclined Safety Ladder
Steps (N.S.)
Steps (N.S.)
L7
L7 El. 86.38
Ladder @ ℄ Sway Frame
Pier Railing
Top Pier El. 79.36

SECTION B-B

SCALE: 1" = 20'-0 (TYP. U.N.)

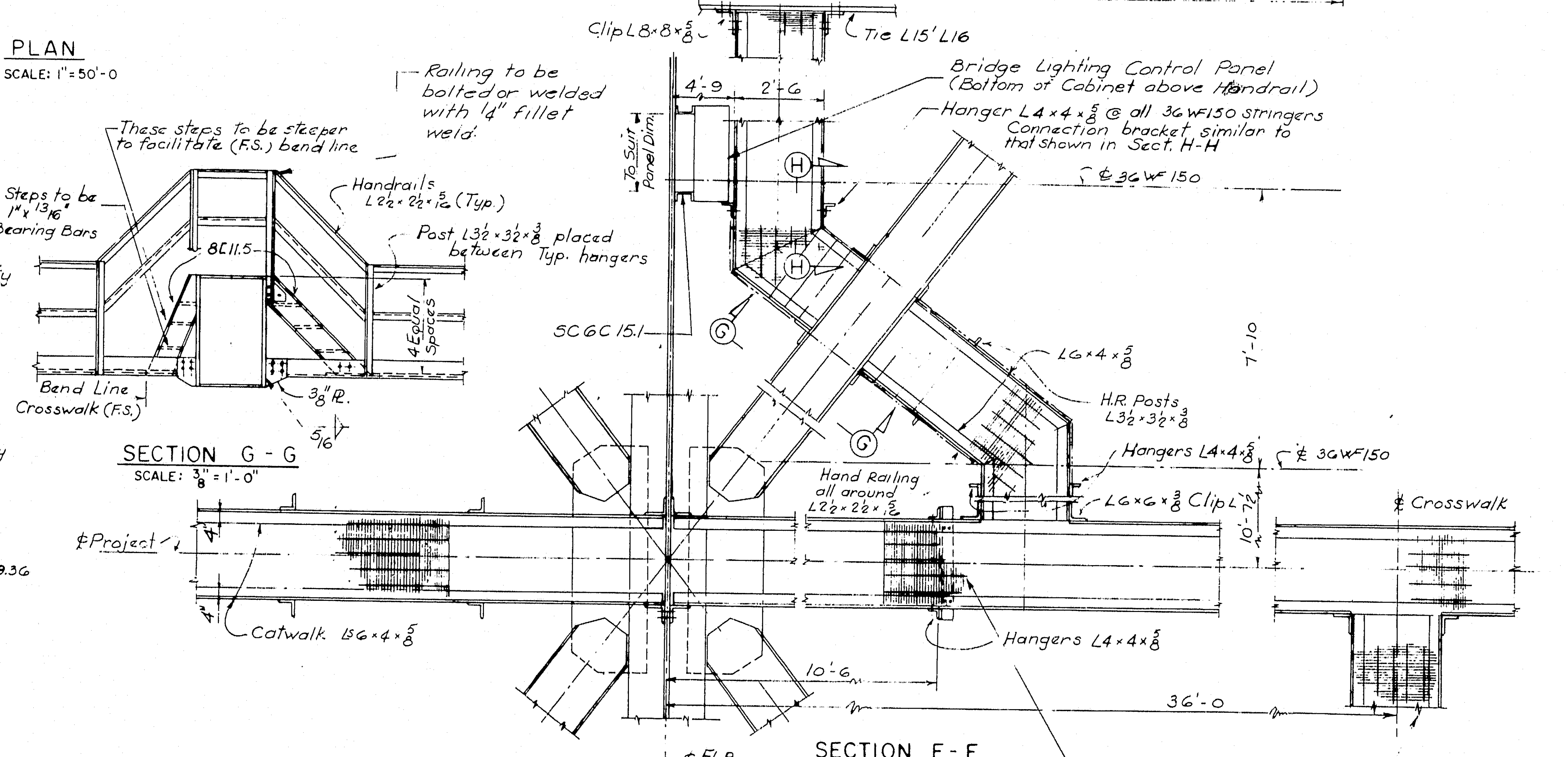

These steps to be steeper to facilitate (F.S.) bend line
Railing to be bolted or welded with ¼" fillet weld
Steps to be 1"×¹³⁄₁₆" Bearing Bars
Handrails L2½×2½×⁵⁄₁₆ (Typ.)
Post L3½×3½×⅜ placed between Typ. hangers
8C11.5
4 Equal Spaces
Bend Line Crosswalk (F.S.)
⅜ R.
⁵⁄₁₆
Clip L8×8×⅝
Tie L15' L16
4'-9
2'-6
To Suit Panel Dim.
Bridge Lighting Control Panel (Bottom of Cabinet above Handrail)
Hanger L4×4×⅝ @ all 36WF150 stringers Connection bracket similar to that shown in Sect. H-H
℄ 36WF150
5C6C15.1
7'-10
L6×4×⅝
H.R. Posts L3½×3½×⅜
Hangers L4×4×⅝
℄ 36WF150
Hand Railing all around L2½×2½×⅜
L6×6×⅜ Clip L
℄ Crosswalk
℄ Project
10'-7¾"
Catwalk 15G×4×⅝
Hangers L4×4×⅝
10'-6
36'-0

SECTION G-G

SCALE: ⅜" = 1'-0"

SECTION F-F

SCALE: ⅜" = 1'-0"

All grating to be Welded Rectangular Grating with 1"×³⁄₁₆" Bearing Bars spaced at 1³⁄₁₆" o.c. with ⅜ ø Cross bars at 4" o.c.

Details of this crosswalk & Hanger bracket details are similar to one shown at Section H-H

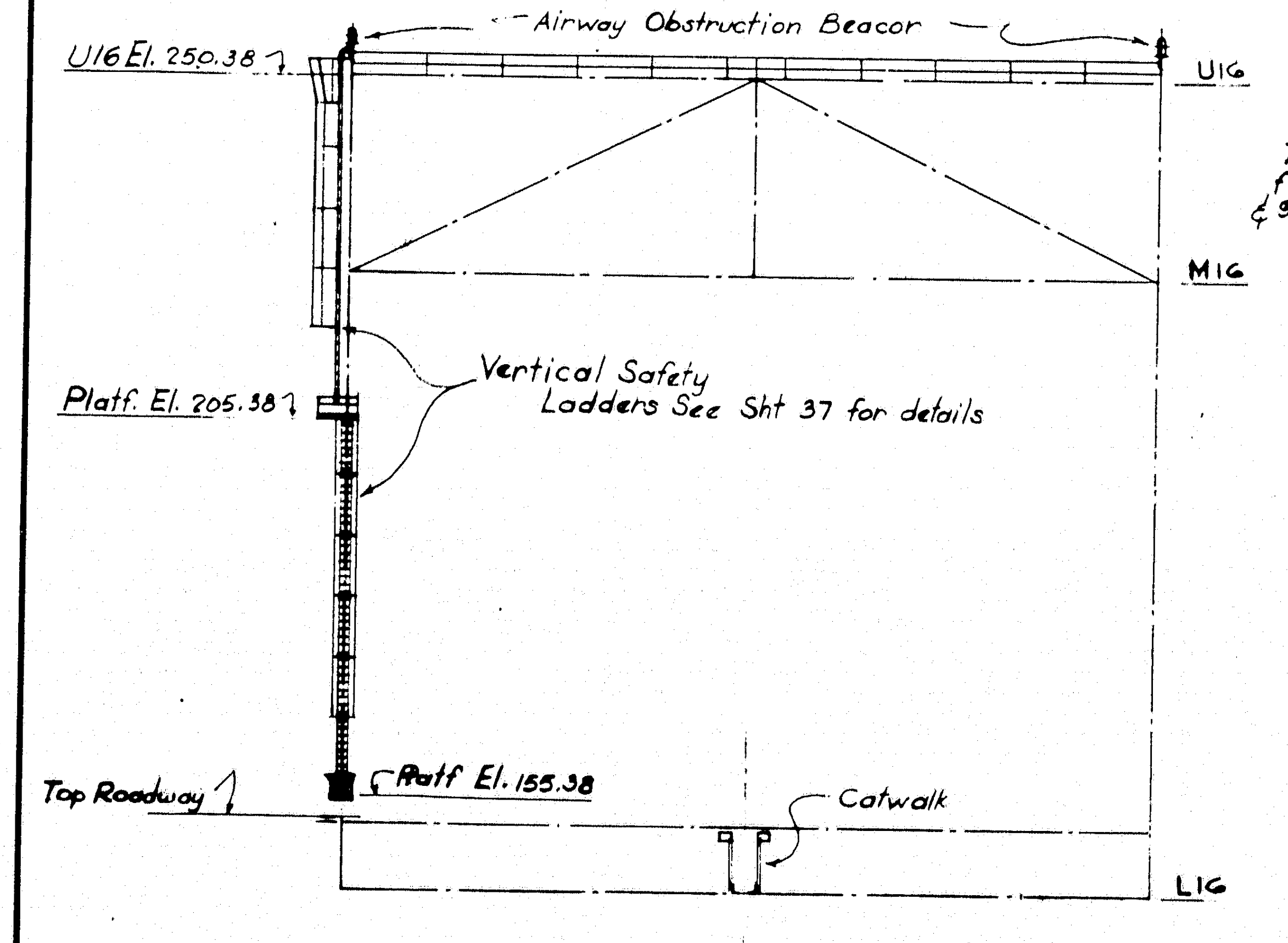

U16 El. 250.38
Airway Obstruction Beacon
U16
M16
Vertical Safety Ladders See Sht 37 for details
Platf. El. 205.38
Platf. El. 155.38
Top Roadway
Catwalk
L16

SECTION C-C

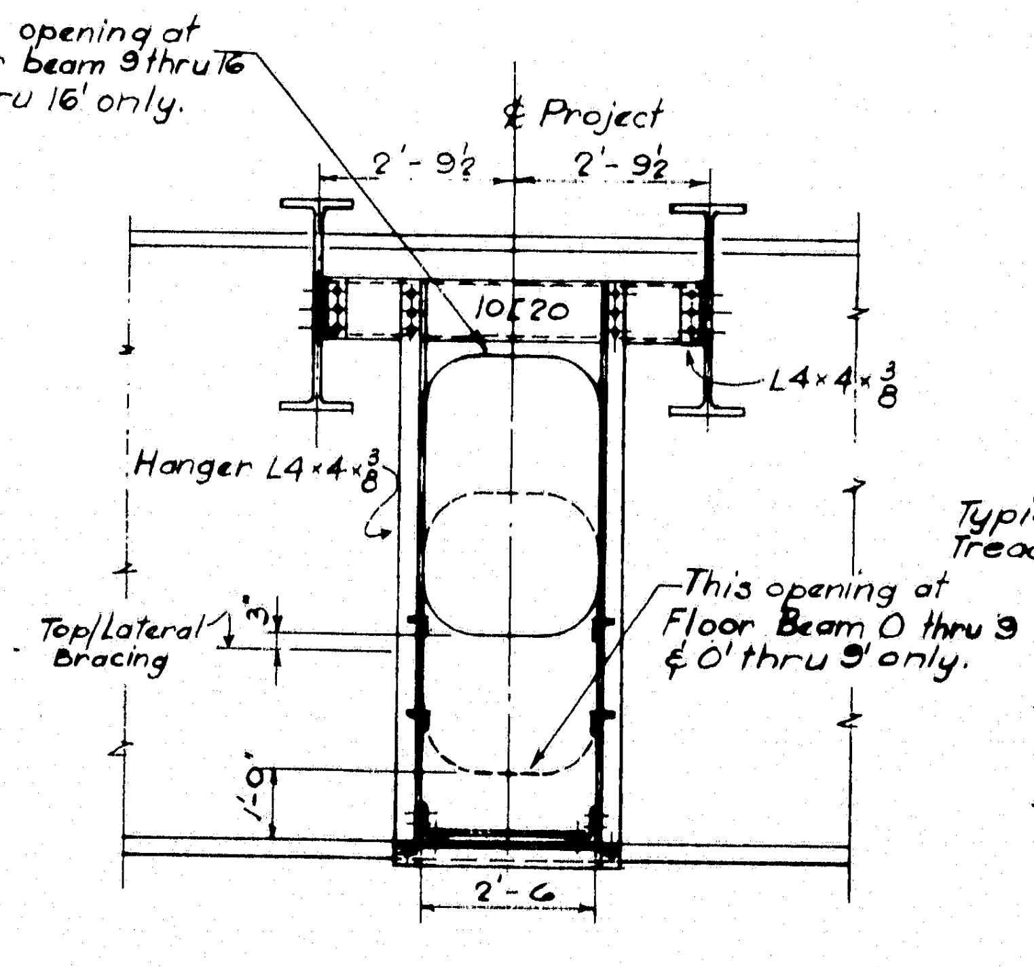

This opening at floor beam 9 thru 16 & 9' thru 16' only.
℄ Project
2'-9½
2'-9½
10C20
L4×4×⅜
Hanger L4×4×⅜
Top Lateral Bracing
This opening at Floor Beam 0 thru 9 & 0' thru 9' only.
1'-0"
2'-6

SECTION E-E

SCALE: ⅜" = 1'-0"

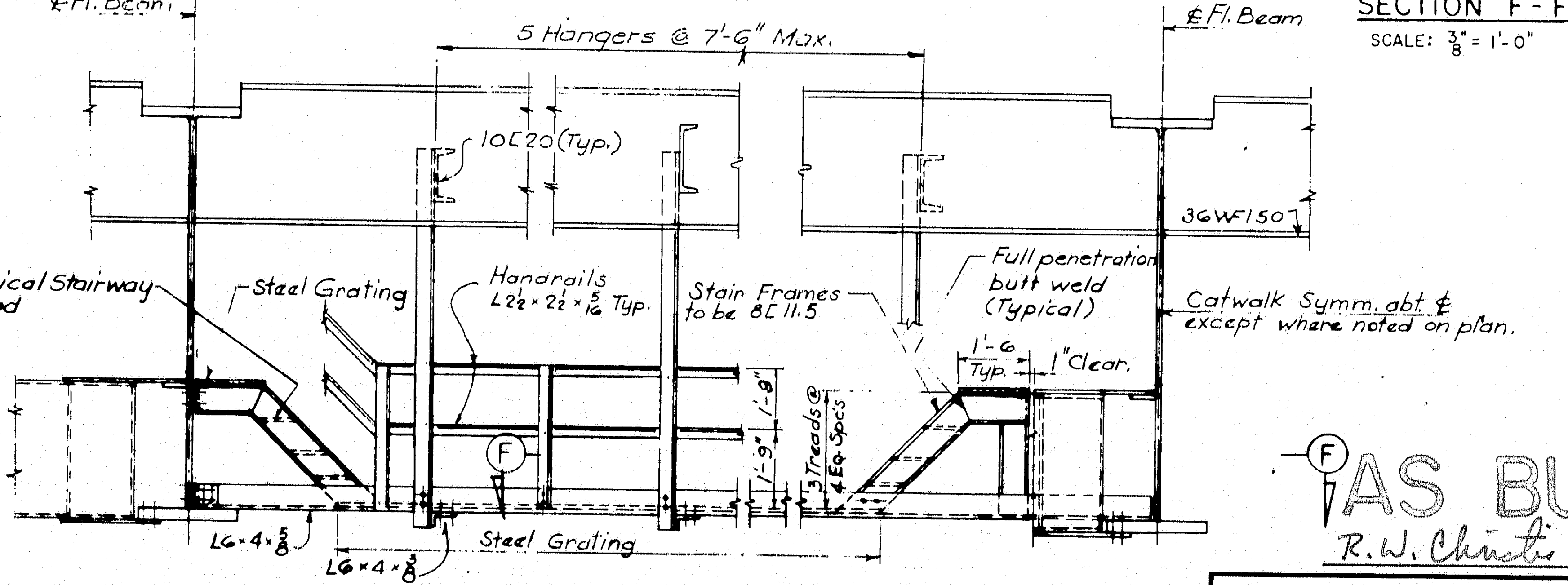

℄ Fl. Beam
5 Hangers @ 7'-6" Max.
℄ Fl. Beam
10C20 (Typ.)
36WF150
Typical Stairway Tread
Steel Grating
Handrails L2½×2½×⁵⁄₁₆ Typ.
Stair Frames to be 8C11.5
Full penetration butt weld (Typical)
1'-6 Typ.
1" Clear.
Catwalk Symm. abt. ℄ except where noted on plan.
1'-8"
1'-9"
5 Treads @ Eq. Spcs.
L6×4×⅝
L6×4×⅝
Steel Grating
F

SECTION D-D

TYPICAL 42'-0 CROSSWALK PANEL

SCALE ⅜" = 1'-0"

AS BUILT

R. W. Christie 2/5/73

5

DESIGN - A. N.
TRACE - A. N.
CHECK - Alex Krynski

BRIDGE NO.
IN CHARGE OF - Richard W. Christie

NEW HAMPSHIRE
DEPARTMENT OF PUBLIC WORKS AND HIGHWAYS
AND
MAINE STATE HIGHWAY COMMISSION
INTERSTATE 95 BRIDGE
OVER
PISCATAQUA RIVER
BETWEEN
PORTSMOUTH, NEW HAMPSHIRE AND KITTERY, MAINE
RIVER BRIDGE

HARDESTY & HANOVER
CONSULTING ENGINEERS
NEW YORK, N. Y.

ACCESS PLATFORMS I

SHEET 36 OF 54

129-131

B. P. R. REG. NO.	STATE	PROJECT NUMBER	SHEET NO.	TOTAL SHEETS
1	MAINE	I—95—1(22)16	37	54

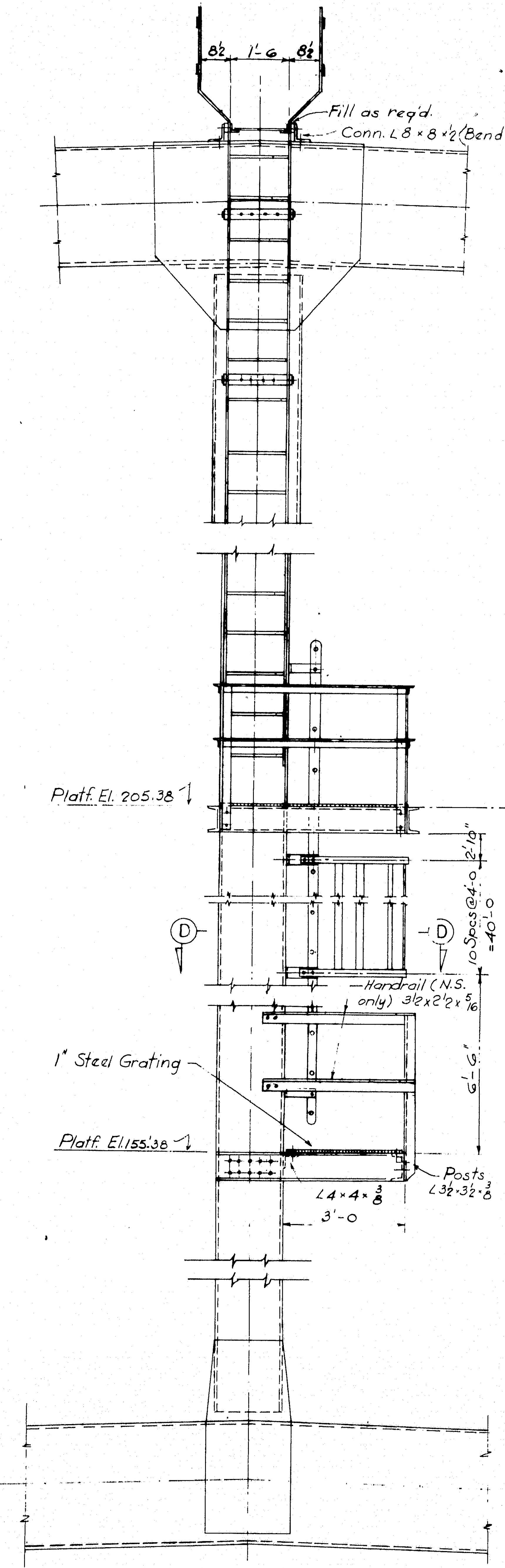
2'-11
8½
1'-6
8½
Fill as req'd.
Conn. L8 × 8 × ½ (Bend)
Platf. El. 205.38
2'-10"
10 Spcs@4-0 =40'-0
D
D
Handrail (N.S. only) 3½x2½x 5/16
6'-6"
1" Steel Grating
Platf. El.155.38
L4×4×⅜
Posts L3½×3½×⅜
3'-0

SECTION A-A

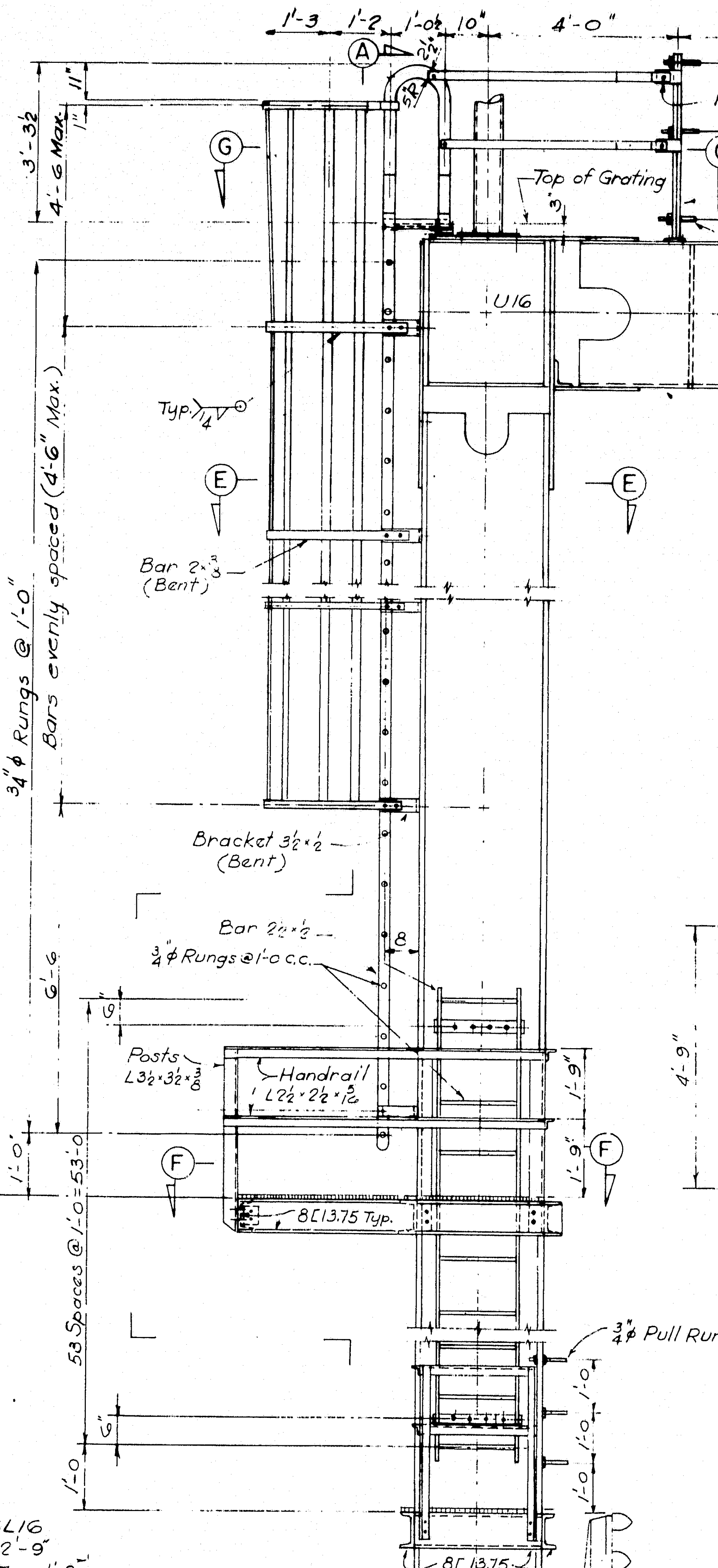
1'-3
1'-2
1'-0½
10"
4'-0"
20 Spaces @ 5'-0 = 100'-0"
A
2¼
5"R
11"
1"
3'-3½
4'-6 Max.
Flat Bar 2½×½×6"Lg.
⅜"φ (1×19 Strand) Stainless Steel Cable
G
G
Top of Grating
3"
End Posts Bar 2"x2" with 4-¾"φ Bolts in Base
¾"-10N.C Swaged Stainless Steel Threaded Sleeve w/Locknuts
U16
Typ. ¼
E
E
Bar 2×⅜ (Bent)
¾"φ Rungs @ 1'-0
Bars evenly spaced (4'-6" Max.)
Bracket 3½×½ (Bent)
Bar 2½×½
¾φ Rungs @1'-0 c.c.
8
6'-6
9
Posts L3½×3½×⅜
Handrail L2½×2½×5/16
1'-9"
1'-9"
1'-0
F
F
8[13.75 Typ.
53 Spaces @ 1'-0 = 53'-0
¾"φ Pull Rungs
6"
1'-0
1'-0
1'-0
1'-0
8[13.75
L16
A
℄ West Truss

AERIAL BEACON ACCESS LADDER AT U16-L16

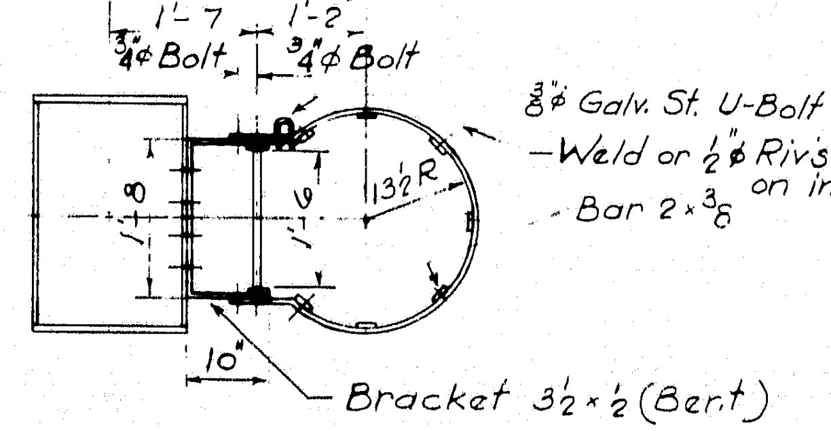
℄ M16L16
2'-9"
1'-7
1'-2
¾φ Bolt
¾φ Bolt
⅜"φ Galv. St. U-Bolt (Typ.)
Weld or ½φ Riv's Ctsk. on inside
Bar 2×⅜
1'-8
1'-6
13½R
10"
Bracket 3½×½ (Bent)

SECTION D-D

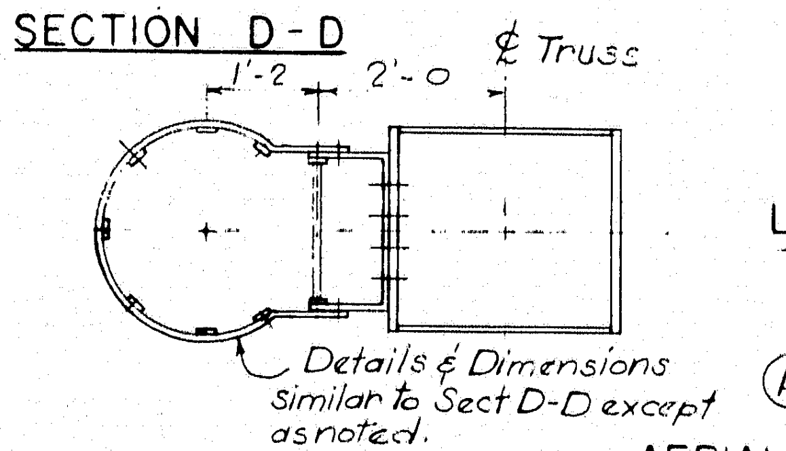
1'-2
2'-0
℄ Truss
Details & Dimensions similar to Sect D-D except as noted.

SECTION E-E

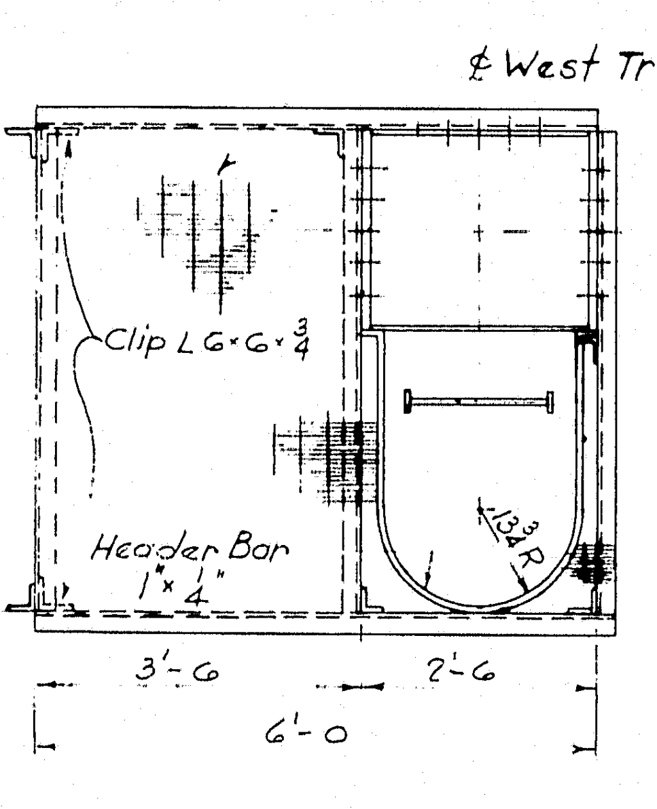
1" Steel Grating
℄ West Truss
℄ M16-L16
Clip L6×6×¾
4'-9"
Header Bar 1"×¼"
13½R
3'-6
2'-6
6'-0

SECTION F-F

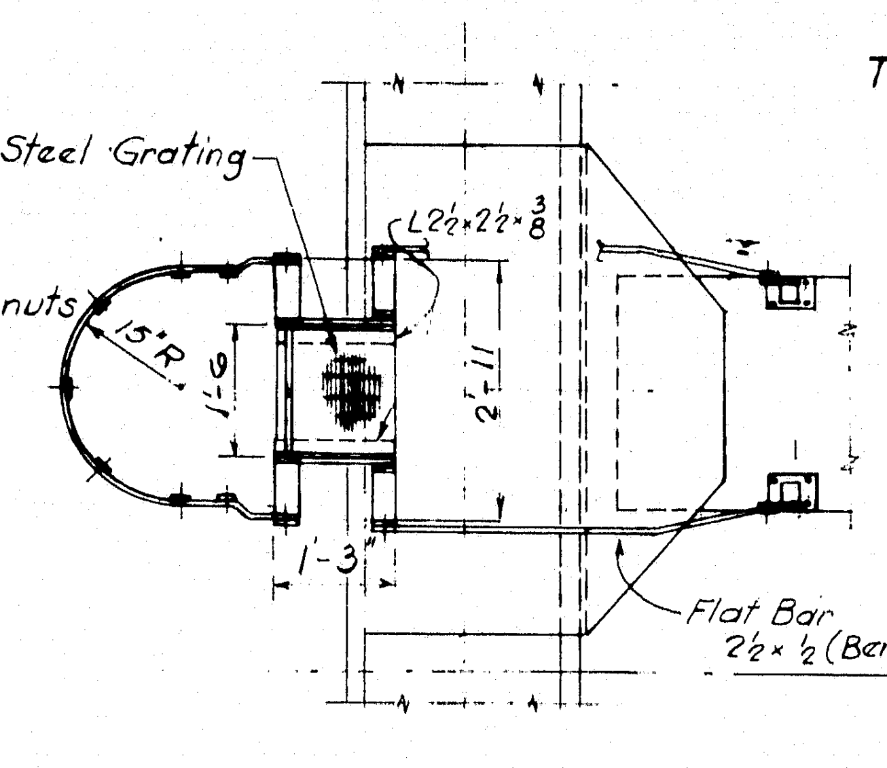
1" Steel Grating
L2½×2½×⅜
15"R
1'-6
2'-11
1'-3"
Flat Bar 2½×½ (Bent)

SECTION G-G

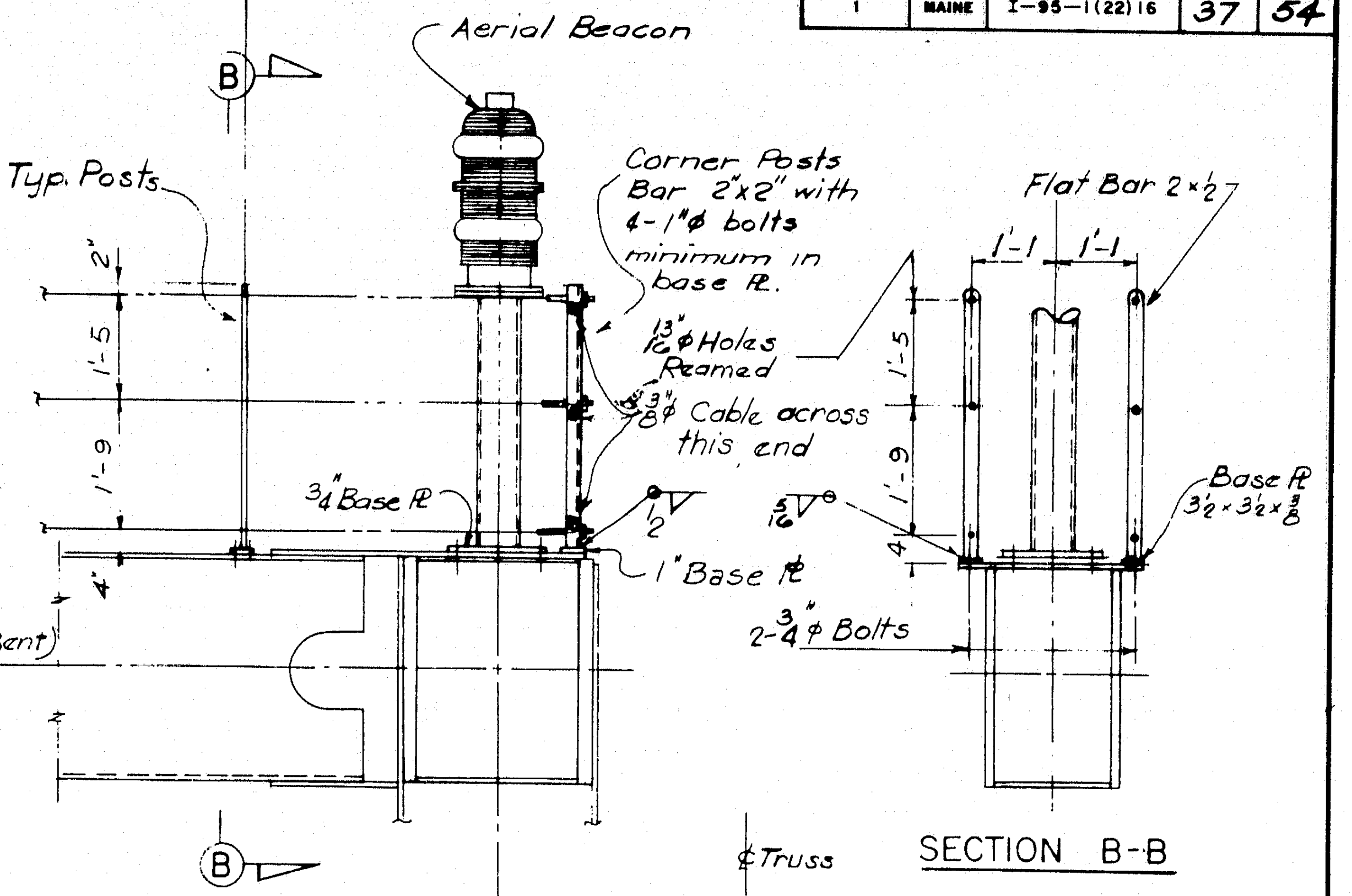
B
B
Aerial Beacon
Typ. Posts
2"
1'-5
1'-9
4"
Corner Posts Bar 2"x2" with 4-1"φ bolts minimum in base Pl.
13/16"φ Holes Reamed
⅜"φ Cable across this end
¾" Base Pl.
½
5/16
1" Base Pl.
2-¾"φ Bolts
Flat Bar 2×½
1'-1
1'-1
1'-5
1'-9
4
Base Pl. 3½×3½×⅜

SECTION B-B

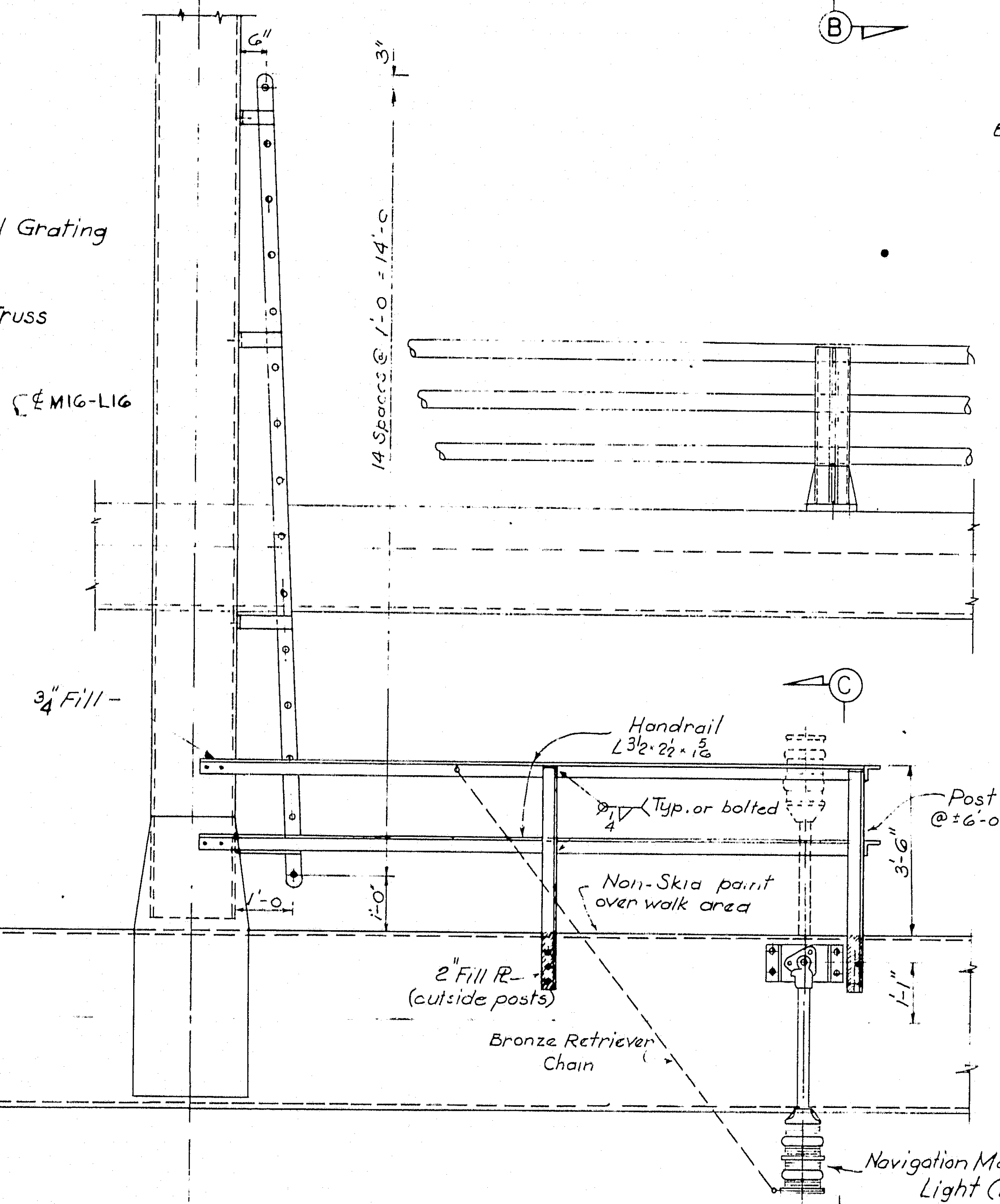
6"
3"
14 Spaces @ 1'-0 = 14'-0
¾" Fill
C
C
Handrail L3½×2½×5/16
¼ (Typ. or bolted
Post 3½×3½×⅜ @±6'-0 Ctr's max.
Non-Skid paint over walk area
3'-6"
1'-0
1'-0
1'-1"
2" Fill Pl. (outside posts)
Bronze Retriever Chain
Navigation Margin Light (Typ.)

West side As Shown	L11	13'-10¾"(N.T.S.)	Platform "A"
East side Opp. Hand	L12	13'-7⅞"	Platform "B"
West side Opp Hand	L10'	6'-1¾"	Platform "E"
East side As Shown	L10'	6'-7¼"	Platform "F"
West side Opp. Hand	L16	17'-1½"	Platform "C"
East side Opp. Hand	L15'	3'-6 5/16"	Platform "D"

TYPICAL NAVIGATION LIGHT ACCESS PLATFORM DETAILS

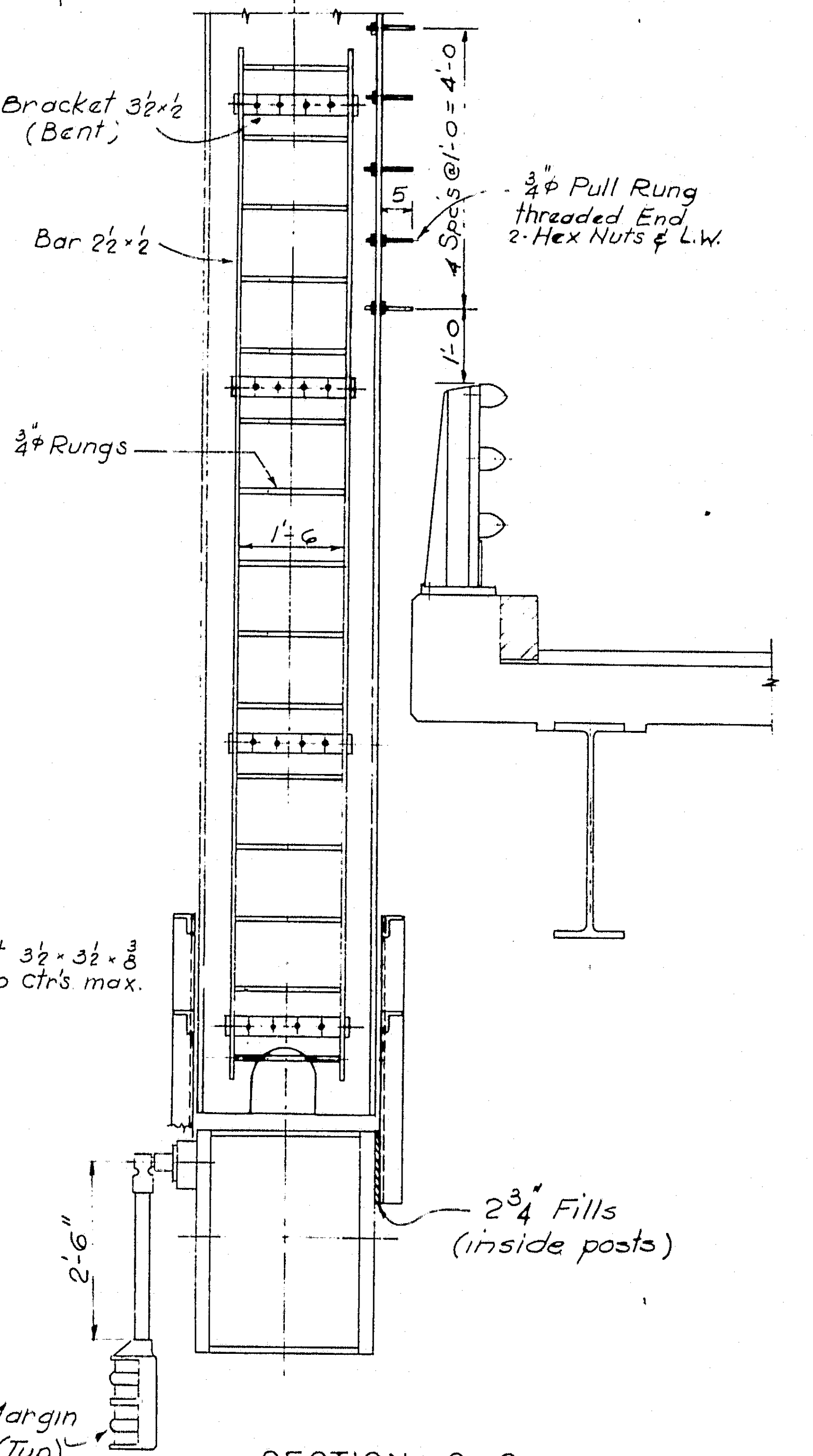
℄ Truss
Bracket 3½×½ (Bent)
Bar 2½×½
4 Spcs@1'-0 = 4'-0
5
¾φ Pull Rung threaded End 2-Hex Nuts & L.W.
1'-0
¾φ Rungs
1'-6
2¾" Fills (inside posts)
2'-6"

SECTION C-C

AS BUILT
R.W. Christie 2/5/73

5

DESIGN — A. N.
TRACE — A. N.
CHECK — Alex Y. Buzwell
BRIDGE NO.
IN CHARGE OF — Richard W. Christie

NEW HAMPSHIRE
DEPARTMENT OF PUBLIC WORKS AND HIGHWAYS
AND
MAINE STATE HIGHWAY COMMISSION
INTERSTATE 95 BRIDGE
OVER
PISCATAQUA RIVER
BETWEEN
PORTSMOUTH, NEW HAMPSHIRE AND KITTERY, MAINE
RIVER BRIDGE

ACCESS PLATFORMS II

SHEET 37 OF 54

HARDESTY & HANOVER
CONSULTING ENGINEERS
NEW YORK, N. Y.

129-132

B. P. R. REG. NO.	STATE	PROJECT NUMBER	SHEET NO.	TOTAL SHEETS
1	MAINE	I—95—1 (22)16	38	54

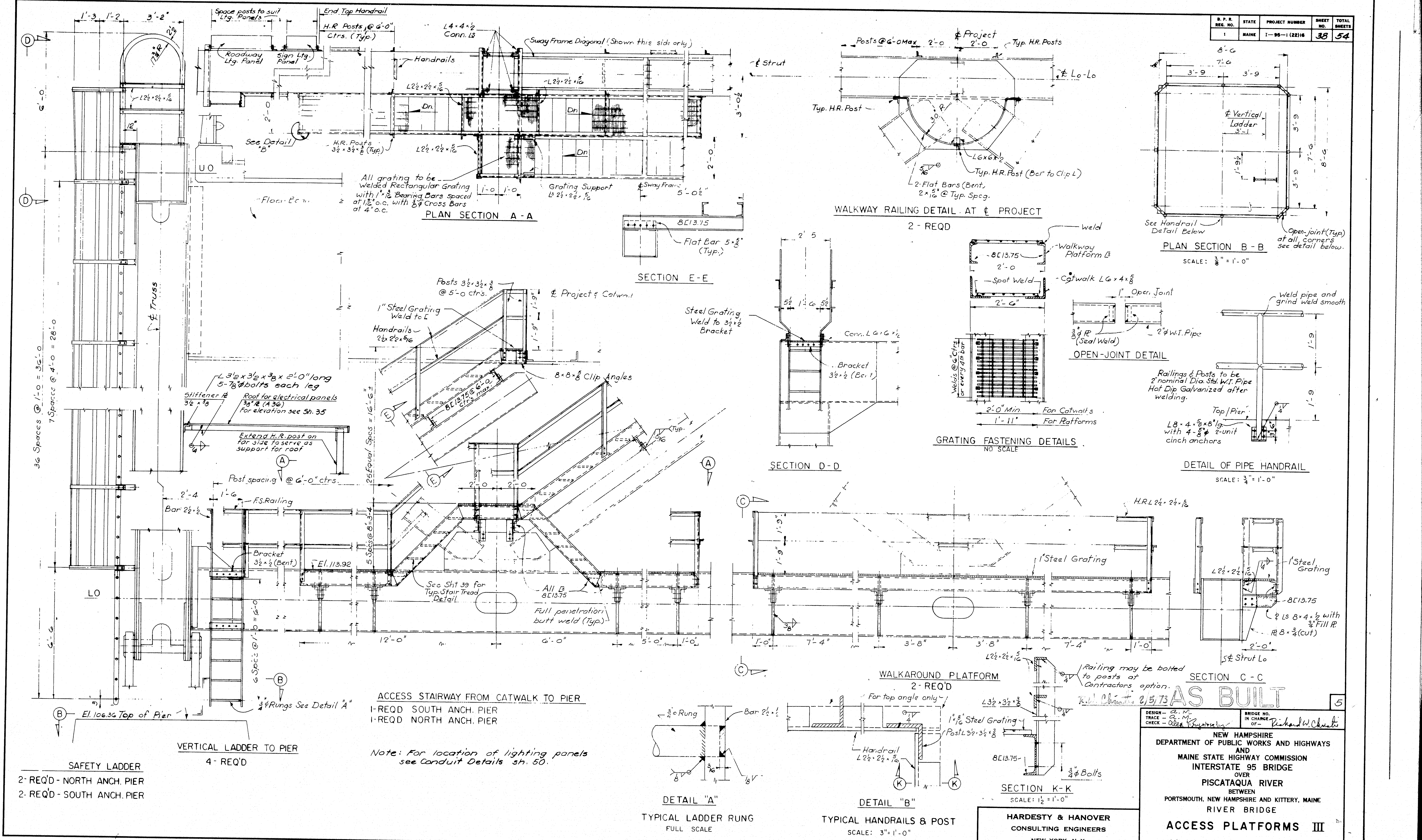

1'-3
1'-2
3'-2"
12½"
1'-3½" R
L2½×2½×5/16
6'-0
12"
UO
36 Spaces @ 1'-0 = 36'-0
7 Spaces @ 4'-0 = 28'-0
¢ Truss
LO
6'-6
El. 106.36 Top of Pier
¾"¢ Rungs See Detail "A"
6 Spcs @ 1'-0 = 6'-0
Space posts to suit Ltg. Panels
End Top Handrail
H.R. Posts @ 6'-0" Ctrs. (Typ.)
Roadway Ltg. Panel
Sign Ltg. Panel
Handrails
L4×4×½ Conn. Ls
Sway Frame Diagonal (Shown this side only)
L2½×2½×5/16
Dn.
See Detail "B"
H.R. Posts 3½×3½×⅜ (Typ.)
All grating to be Welded Rectangular Grating with 1"×3/16 Bearing Bars spaced at 1³⁄₁₆" o.c. with ¼"¢ Cross Bars at 4" o.c.
Grating Support L3½×2½×5/16
Sway Frame
Floor Beam
1'-0
5'-0½"
2'-0
3'-0½
¢ Strut
8[13.75
Flat Bar 5×⅝ (Typ.)
Posts 3½×3½×⅜ @ 5'-0 ctrs.
¢ Project & Colwn.
1" Steel Grating Weld to [
Handrails 2½×2½×5/16
1'-9
L3½×3½×⅜×2'-0" long 5-⅞"¢ bolts each leg
Stiffener Pl 3½×⅜
Roof for electrical panels ⅜" Pl (A36) For elevation see Sh. 35
Extend H.R. post on far side to serve as support for roof
8×8×⅝ Clip Angles
8[13.75 @ 6'-0 Ctrs. max
25 Equal Spcs = 16'-6¾
5/16 Typ.
Post spacing @ 6'-0" ctrs.
2'-4
1'-6
F.S. Railing
Bar 2½×½
Bracket 3½×½ (Bent)
El. 113.92
5 Spcs @ 8" = 3'-4
See Sht 39 for Typ. Stair Tread Detail
All [s 8[13.75
Full penetration butt weld (Typ.)
12'-0"
6'-0"
5'-0"
1'-0"
Posts @ 6'-0 Max
2'-0
¢ Project
Typ. H.R. Posts
¢ Lo-Lo
Typ. H.R. Post
30°
L6×6×½
Typ. H.R. Post (Bar to Clip L)
2-Flat Bars (Bent, 2×½ @ Typ. Spcg.
5/16
8'-6
7'-6
3'-9
¢ Vertical Ladder
3'-1
1'-9½
7'-6
8'-6
See Handrail Detail Below
Open-joint (Typ) at all corners see detail below.
2'5
5½
1'-6
Steel Grating Weld to 3½×½ Bracket
Conn. L6×6×½
Bracket 3½×½ (Bent)
Weld
8[13.75
Walkway Platform [s
2'-0
Spot Weld
Catwalk L6×4×⅝
2'-6"
Welds @ 6" Ctrs. or every 4th bar
2'-0" Min For Catwalks
1'-11" For Platforms
1" Open Joint
¾"¢ Pl (Seal Weld)
2"¢ W.I. Pipe
Weld pipe and grind weld smooth
Railings & Posts to be 2" nominal Dia. Std. W.I. Pipe Hot Dip Galvanized after welding.
Top/Pier
L8×4×⅝×8" lg. with 4-⅝"¢ 2-unit cinch anchors
1'-9
1'-9
H.R.L 2½×2½×5/16
1" Steel Grating
1'-9"
1'-0"
7'-4"
3'-8"
3'-8"
7'-4"
1'-0"
L2½×2½×5/16
1" Steel Grating
8[13.75
2 Ls 8×4×½ with ¾" Fill Pl.
Pl 8×¾ (cut)
2'-0"
5¢ Strut Lo
⅜"¢ Rung
Bar 2½×½
3/16
⅛
For top angle only
1"×3/16 Steel Grating
Post L3½×3½×⅜
Handrail L2½×2½×5/16
L2½×2½×5/16
L3½×3½×⅜
8[13.75
¾"¢ Bolts
A
B
C
D
E
K

PLAN SECTION A-A

SECTION E-E

WALKWAY RAILING DETAIL AT ¢ PROJECT

2-REQD

PLAN SECTION B-B

SCALE: ⅜" = 1'-0"

SECTION D-D

GRATING FASTENING DETAILS

NO SCALE

OPEN-JOINT DETAIL

DETAIL OF PIPE HANDRAIL

SCALE: ¾" = 1'-0"

WALKAROUND PLATFORM

2-REQ'D

SECTION C-C

Railing may be bolted to posts at Contractors option.

SECTION K-K

SCALE: 1½" = 1'-0"

SAFETY LADDER

2-REQ'D - NORTH ANCH. PIER
2-REQ'D - SOUTH ANCH. PIER

VERTICAL LADDER TO PIER

4-REQ'D

ACCESS STAIRWAY FROM CATWALK TO PIER

1-REQD SOUTH ANCH. PIER
1-REQD NORTH ANCH. PIER

Note: For location of lighting panels see Conduit Details sh. 50.

DETAIL "A"

TYPICAL LADDER RUNG

FULL SCALE

DETAIL "B"

TYPICAL HANDRAILS & POST

SCALE: 3" = 1'-0"

Christie 2/5/73 AS BUILT

5

DESIGN — a. M.
TRACE — a. M.
CHECK — Alex Bryzowsky

BRIDGE NO.
IN CHARGE OF — Richard W. Christie

HARDESTY & HANOVER
CONSULTING ENGINEERS
NEW YORK, N. Y.

NEW HAMPSHIRE
DEPARTMENT OF PUBLIC WORKS AND HIGHWAYS
AND
MAINE STATE HIGHWAY COMMISSION
INTERSTATE 95 BRIDGE
OVER
PISCATAQUA RIVER
BETWEEN
PORTSMOUTH, NEW HAMPSHIRE AND KITTERY, MAINE
RIVER BRIDGE

ACCESS PLATFORMS III

SHEET 38 OF 54

129-133

B. P. R. REG. NO.	STATE	PROJECT NUMBER	SHEET NO.	TOTAL SHEETS
1	MAINE	I—95—1(22)16	39	54

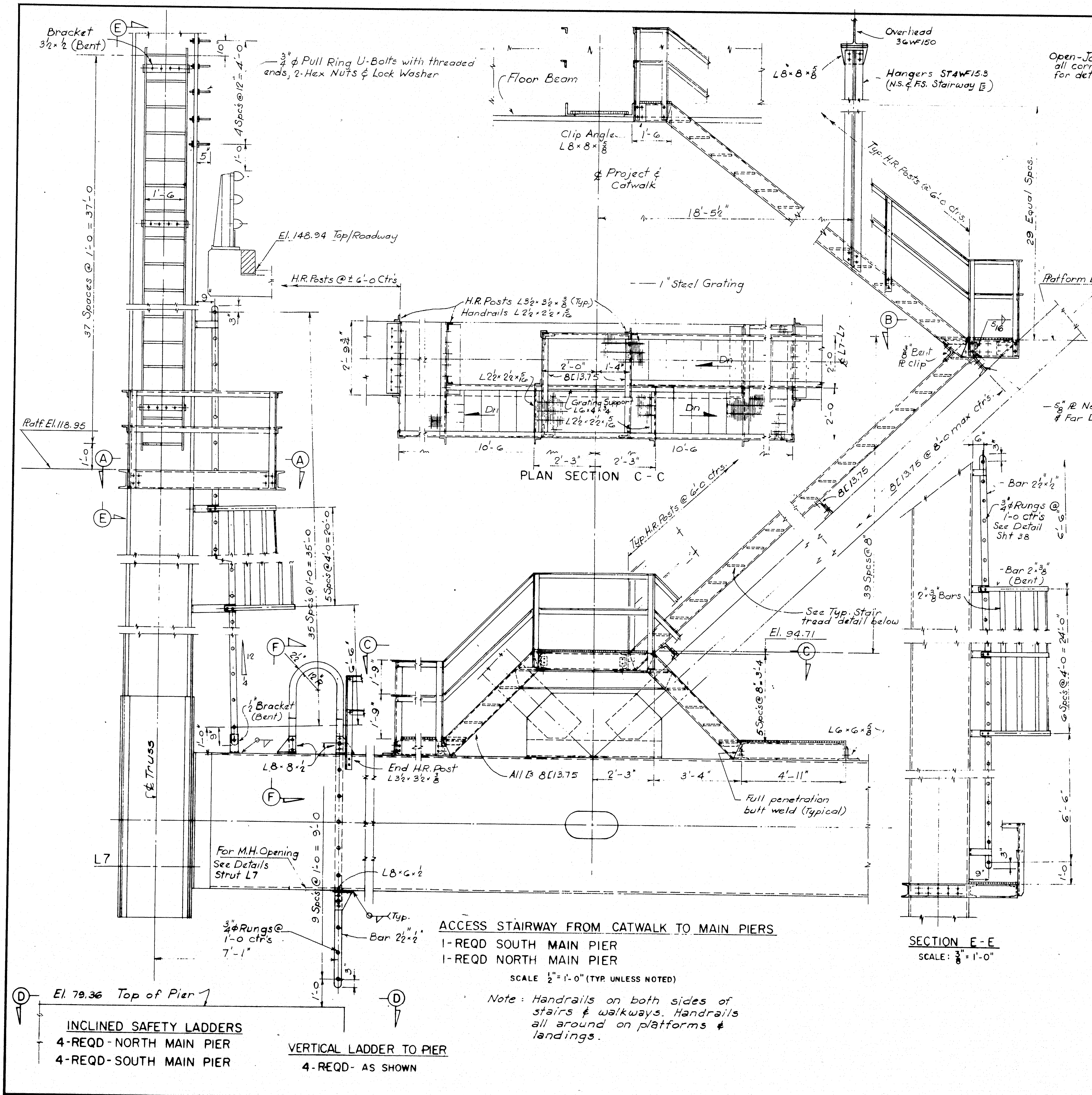

Bracket 3½×½ (Bent)
E
¾"φ Pull Ring U-Bolts with threaded ends, 2-Hex Nuts & Lock Washer
4 Spcs @ 12" = 4'-0
37 Spaces @ 1'-0 = 37'-0
1'-6
El. 148.94 Top/Roadway
H.R. Posts @ ± 6'-0 Ctrs
Platf. El. 118.95
A
Floor Beam
Clip Angle L8×8×⅝
℄ Project & Catwalk
18'-5½"
1" Steel Grating
Overhead 36WF150
L8×8×⅝
Hangers ST4WF15.5 (N.S. & F.S. Stairway ℄)
Typ. H.R. Posts @ 6'-0 ctrs.
29 Equal Spcs.
Platform El. 120.71
B
Bent ℗ clip
H.R. Posts L3½×3½×⅜ (Typ.)
Handrails L2½×2½×5/16
2'-9¾"
2'-0"
1'-4"
8[13.75
Grating Support L6×4×⅜
L2½×2½×5/16
Dn
10'-6
2'-3"
2'-3"
L7-L7
5/8" ℗ Near C, ⅝ Far C
8[13.75
8[13.75 @ 8'-0 max ctrs.
Typ. H.R. Posts @ 6'-0 ctrs.
39 Spcs @ 8"
35 Spcs @ 1'-0 = 35'-0
5 Spcs @ 4'-0 = 20'-0
See Typ. Stair tread detail below
El. 94.71
C
F
½" Bracket (Bent)
L8×8×½
End H.R. Post L3½×3½×⅜
All [s 8[13.75
2'-3"
3'-4"
4'-11"
5 Spcs @ 8"=3'-4
L6×6×⅝
Full penetration butt weld (Typical)
℄ Truss
L7
For M.H. Opening See Details Strut L7
9 Spcs @ 1'-0 = 9'-0
L8×6×½
¾"φ Rungs @ 1'-0 ctr's
7'-1"
Bar 2½×½
D
Bar 2½"×½"
¾"φ Rungs @ 1'-0 ctr's See Detail Sht 38
Bar 2×⅜ (Bent)
2×⅜ Bars
6 Spcs @ 4'-0 = 24'-0
6'-6"
1'-0

PLAN SECTION C-C

SECTION E-E

SCALE: ⅜" = 1'-0"

ACCESS STAIRWAY FROM CATWALK TO MAIN PIERS

1-REQD SOUTH MAIN PIER
1-REQD NORTH MAIN PIER

SCALE ½" = 1'-0" (TYP. UNLESS NOTED)

Note: Handrails on both sides of stairs & walkways. Handrails all around on platforms & landings.

El. 79.36 Top of Pier

INCLINED SAFETY LADDERS

4-REQD-NORTH MAIN PIER
4-REQD-SOUTH MAIN PIER

VERTICAL LADDER TO PIER

4-REQD- AS SHOWN

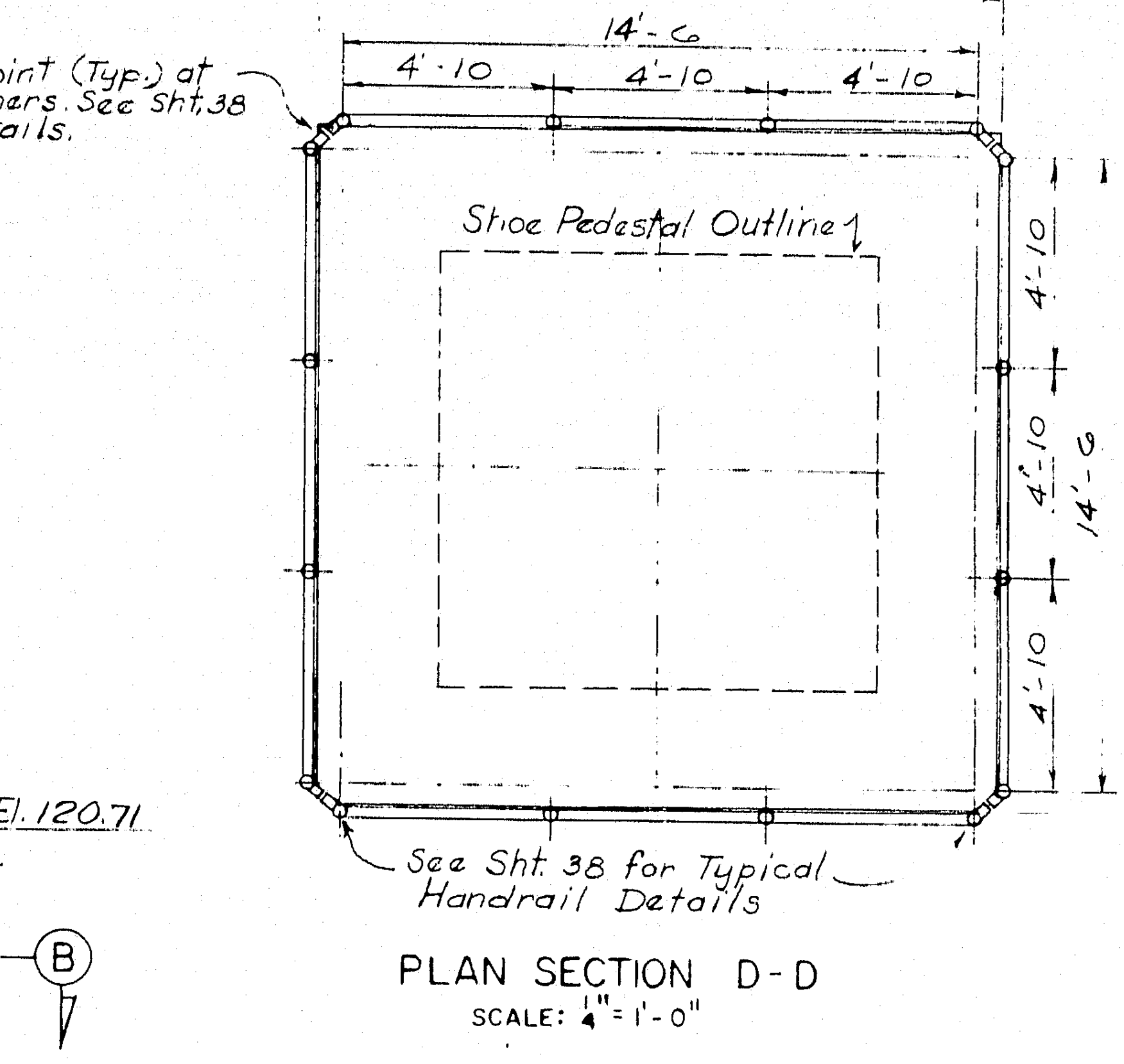

15'-6
14'-6
4'-10
4'-10
4'-10
Open-Joint (Typ.) at all corners. See Sht. 38 for details.
Shoe Pedestal Outline
14'-6
15'-6
See Sht. 38 for Typical Handrail Details

PLAN SECTION D-D

SCALE: ¼" = 1'-0"

MATERIAL REQUIRED		
ITEM	DESCRIPTION	SPECS
LADDERS	Safety Guard Rung Type	ASTM A-588
STAIRWAYS & CATWALKS	[Stringer with L handrail	ASTM A-588
WALKWAY CABLE	⅜"φ Stainless Steel Wire Strand Preformed, Medium Strength	ASTM A-368
THREADED SLEEVES	Swaged Stainless Steel ¾"-10NC	COMMERCIAL
CINCH ANCHORS	2-UNIT-⅝"φ	COMMERCIAL
PIPE RAILING	2"φ Wrought Iron	ASTM A-73
RECTANGULAR GRATING ALL WELDED	1"×3/16" Brg. Bars @ 1 3/16" o.c. ⅜"φ Cross Bars @ 4" o.c.	ASTM A-36 Galvanized
U-BOLTS	⅜"φ Galv. Steel	ASTM A-588
PULL RUNGS	¾"φ Steel	ASTM A-588
STAIR TREADS	1"×3/16" Bearing Bars	ASTM A36 Galv.

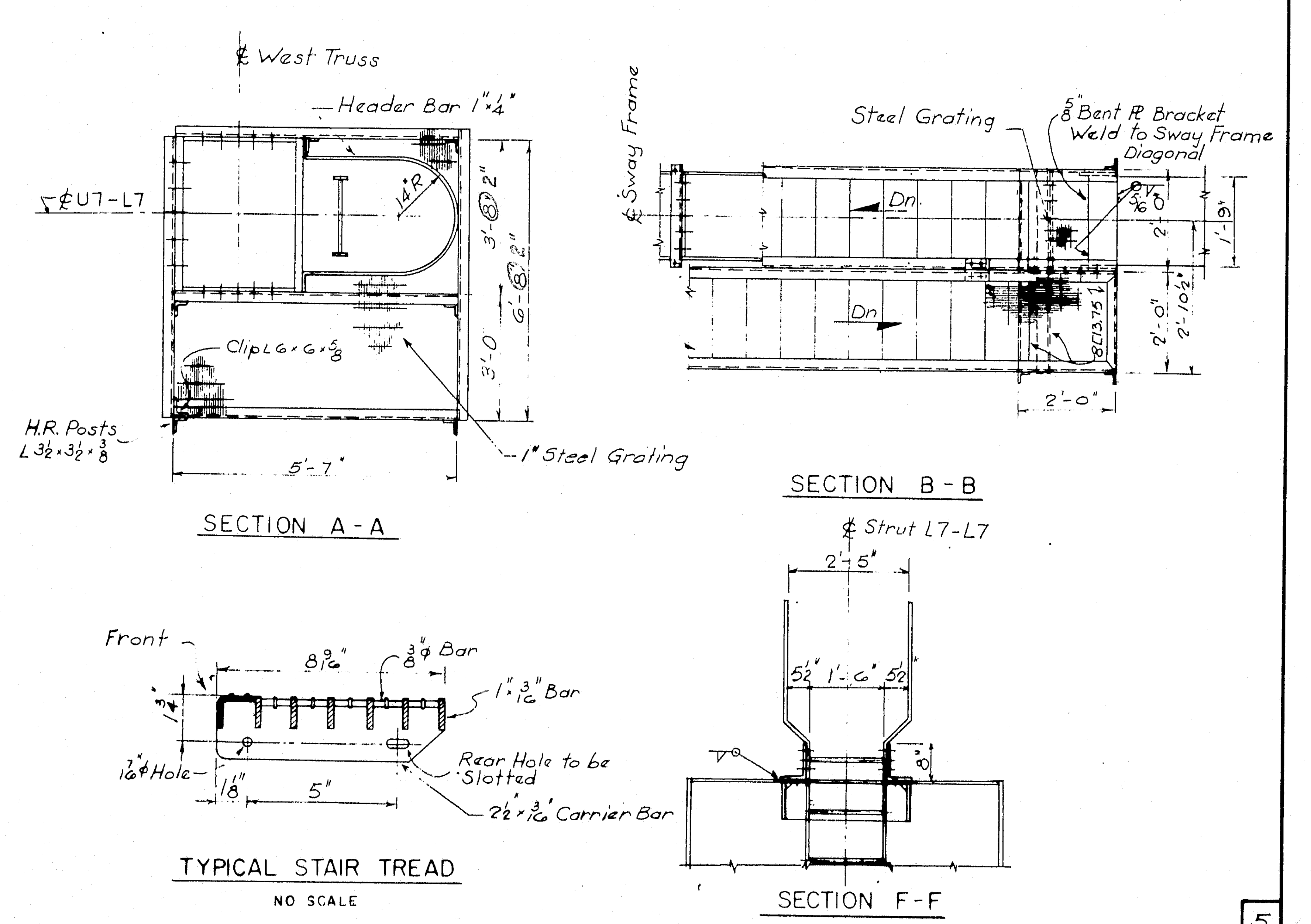

℄ West Truss
Header Bar 1"×¼"
14R
℄ U7-L7
Clip L6×6×⅝
H.R. Posts L3½×3½×⅜
1" Steel Grating
5'-7"
3'-0
℄ Sway Frame
Steel Grating
⅝ Bent ℗ Bracket Weld to Sway Frame Diagonal
Dn
2'-0"
℄ Strut L7-L7
2'-5"
5½ 1'-6" 5½
Front
8⅜"
⅜"φ Bar
1"×3/16" Bar
1/16"φ Hole
5"
Rear Hole to be Slotted
2½×3/16" Carrier Bar

SECTION A-A

SECTION B-B

TYPICAL STAIR TREAD

NO SCALE

SECTION F-F

5

AS BUILT
R.W. Christie 2/5/73

HARDESTY & HANOVER
CONSULTING ENGINEERS
NEW YORK, N.Y.

DESIGN — A. M.
TRACE — A. M.
CHECK — Alex Dzywonchyk

BRIDGE NO.
IN CHARGE OF — Richard W. Christie

NEW HAMPSHIRE
DEPARTMENT OF PUBLIC WORKS AND HIGHWAYS
AND
MAINE STATE HIGHWAY COMMISSION
INTERSTATE 95 BRIDGE
OVER
PISCATAQUA RIVER
BETWEEN
PORTSMOUTH, NEW HAMPSHIRE AND KITTERY, MAINE
RIVER BRIDGE

ACCESS PLATFORMS IV

SHEET 39 OF 54

129-134

B. P. R. REG. NO.	STATE	PROJECT NUMBER	SHEET NO.	TOTAL SHEETS
1	MAINE	I-95-1(22) 16	40	54

MATERIALS LIST

SHOE & PEDESTAL	High Strength Steel Casting ASTM A148, *Grade 105-85*
HUB	Alloy Steel Forging ASTM A237, Class A
HUB BOLT	ASTM A490 (20 required per hub)
SHOE PIN	Alloy Steel Forging ASTM A237, Class C
SHOE PIN KEEPER, TIE ROD & NUT	Carbon Steel Forging ASTM A235, Class E
ROLLER TRACK	High Strength Alloy Steel Plate ASTM A517
ROLLER	Alloy Steel Forging ASTM A291, Class 5, Quenched & Tempered Hard chromium plate all over, .005 thick (see plating note).
ROLLER SHAFT	Carbon Steel Forging ASTM A235-Class E Hard chromium plate O.D., .005 thick (see plating note).

PLATING NOTE:
Chromium plating shall conform to ASTM B177.
Outside surfaces of rollers and shafts shall have a maximum roughness of 32 before plating.

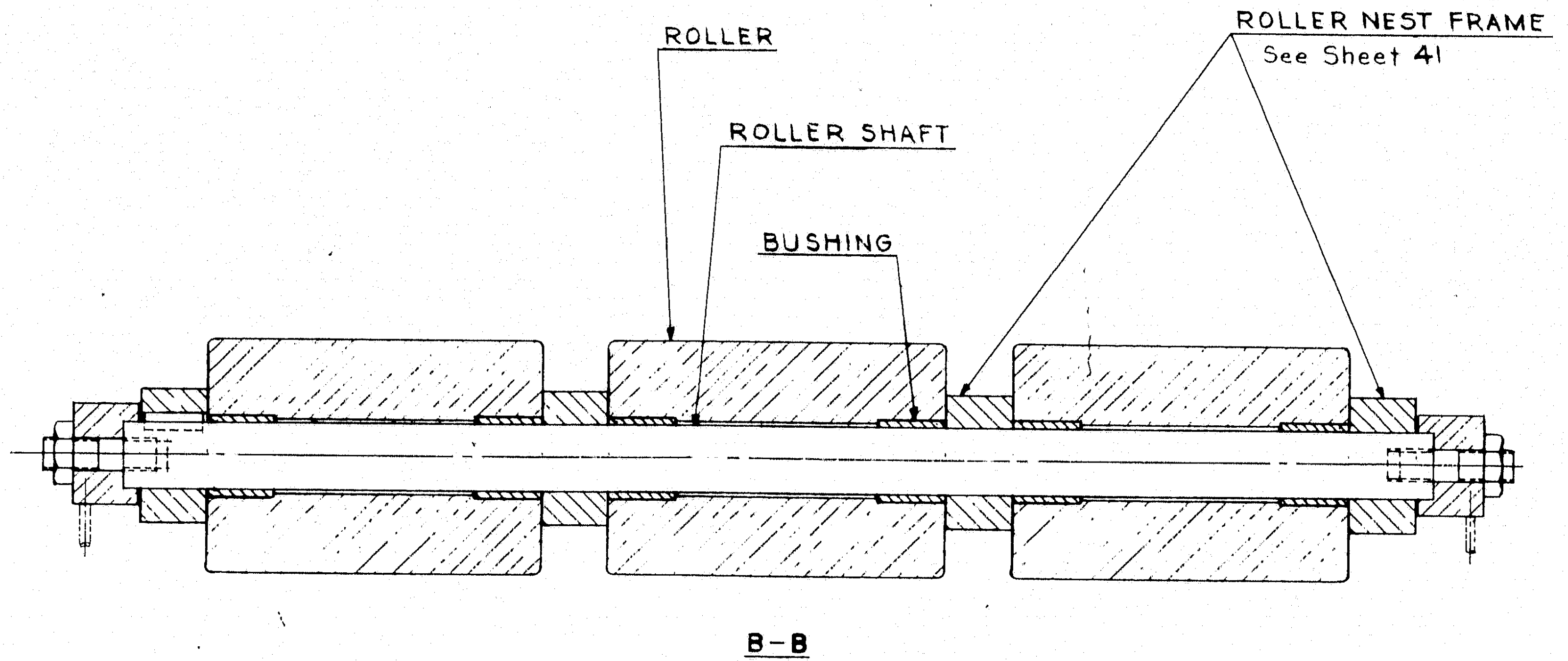
ROLLER
ROLLER SHAFT
BUSHING
ROLLER NEST FRAME
See Sheet 41

B-B
Arrangement of Roller Shaft
(For details See Sheet 41)

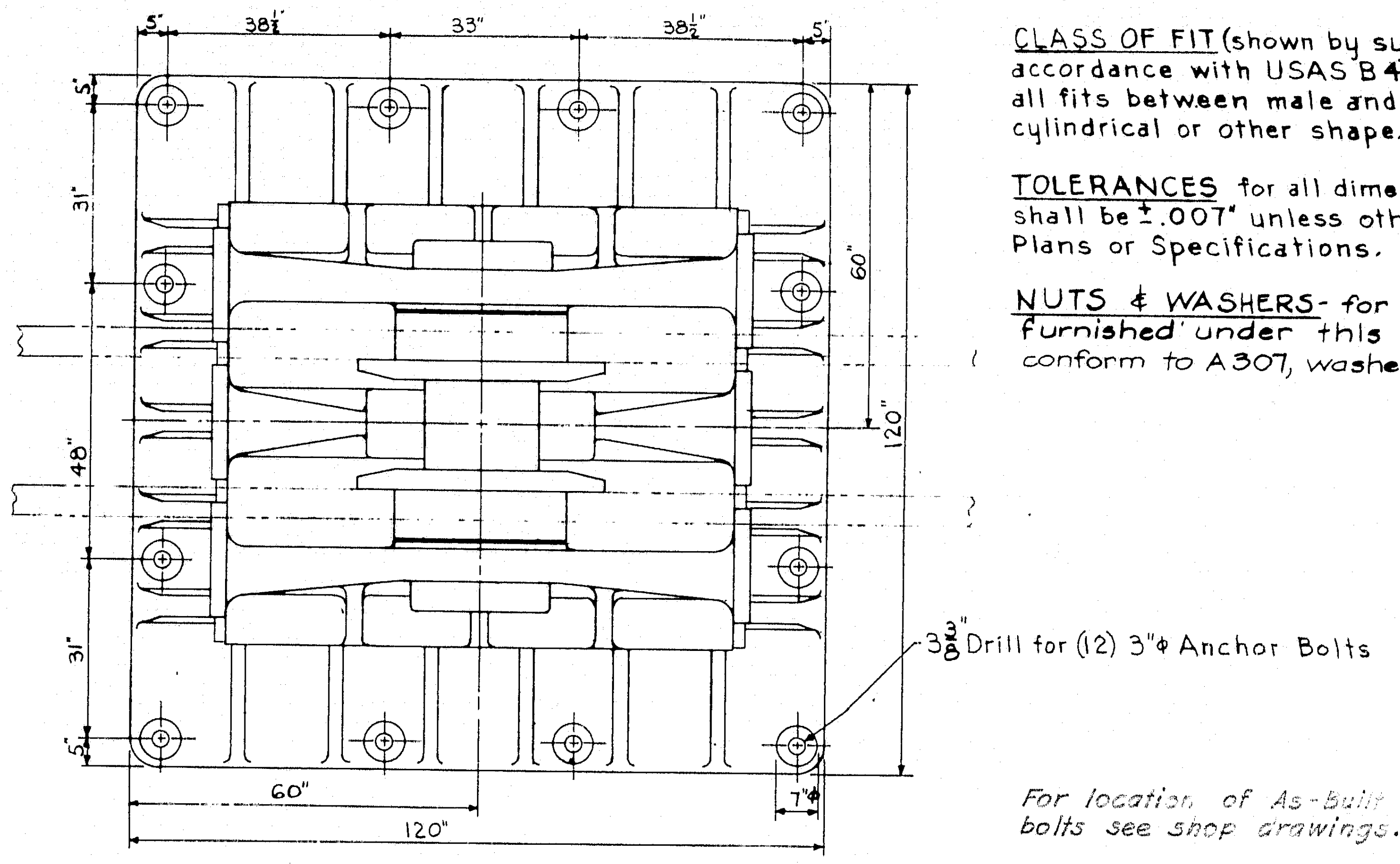
5"
38¼"
33"
38¼"
5"
31"
48"
31"
60"
120"
60"
120"
7½"
3⅜ Drill for (12) 3"φ Anchor Bolts

For location of As-built anchor bolts see shop drawings.

GENERAL NOTES FOR SHOES

SURFACE FINISH (shown by symbol: ✓) shall be maximum roughness in accordance with USAS B46.1.

CLASS OF FIT (shown by symbol: ▽) shall be in accordance with USAS B4.1, and shall apply to all fits between male and female parts, whether of cylindrical or other shape.

TOLERANCES for all dimensions for machined surfaces shall be ±.007" unless otherwise required by the Plans or Specifications.

NUTS & WASHERS - *for anchor bolts to be furnished under this contract.* Nuts to *conform to A307, washers to A36.*

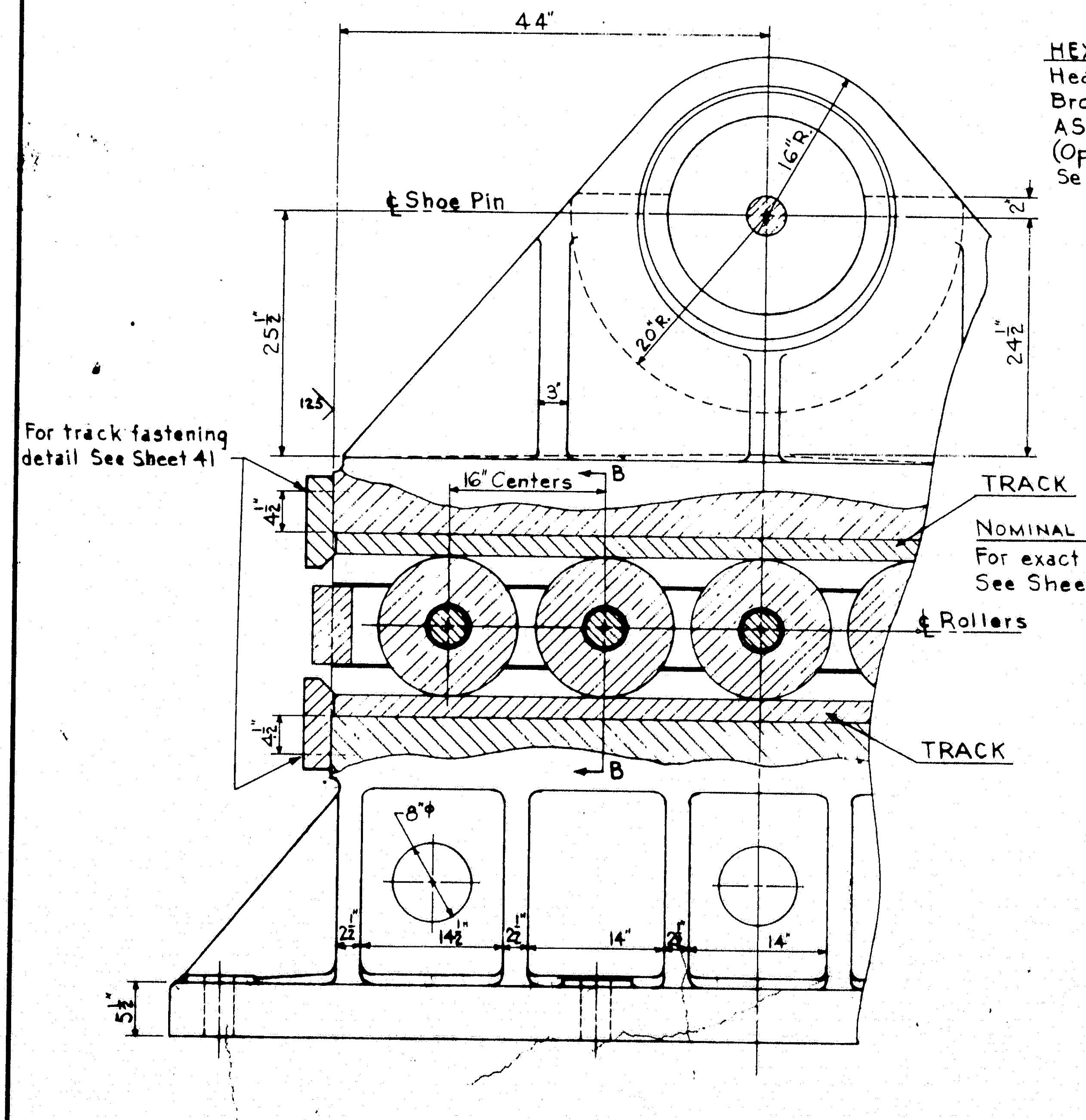
44"
16"R.
20"R.
℄ Shoe Pin
25½"
24½"
2"
3"
125
For track fastening detail See Sheet 41
16" Centers
B
TRACK
℄ Rollers
TRACK
4½"
8"φ
2½"
14½"
14"
5½"

VIEW C-C
Scale: 1"=1'-0"

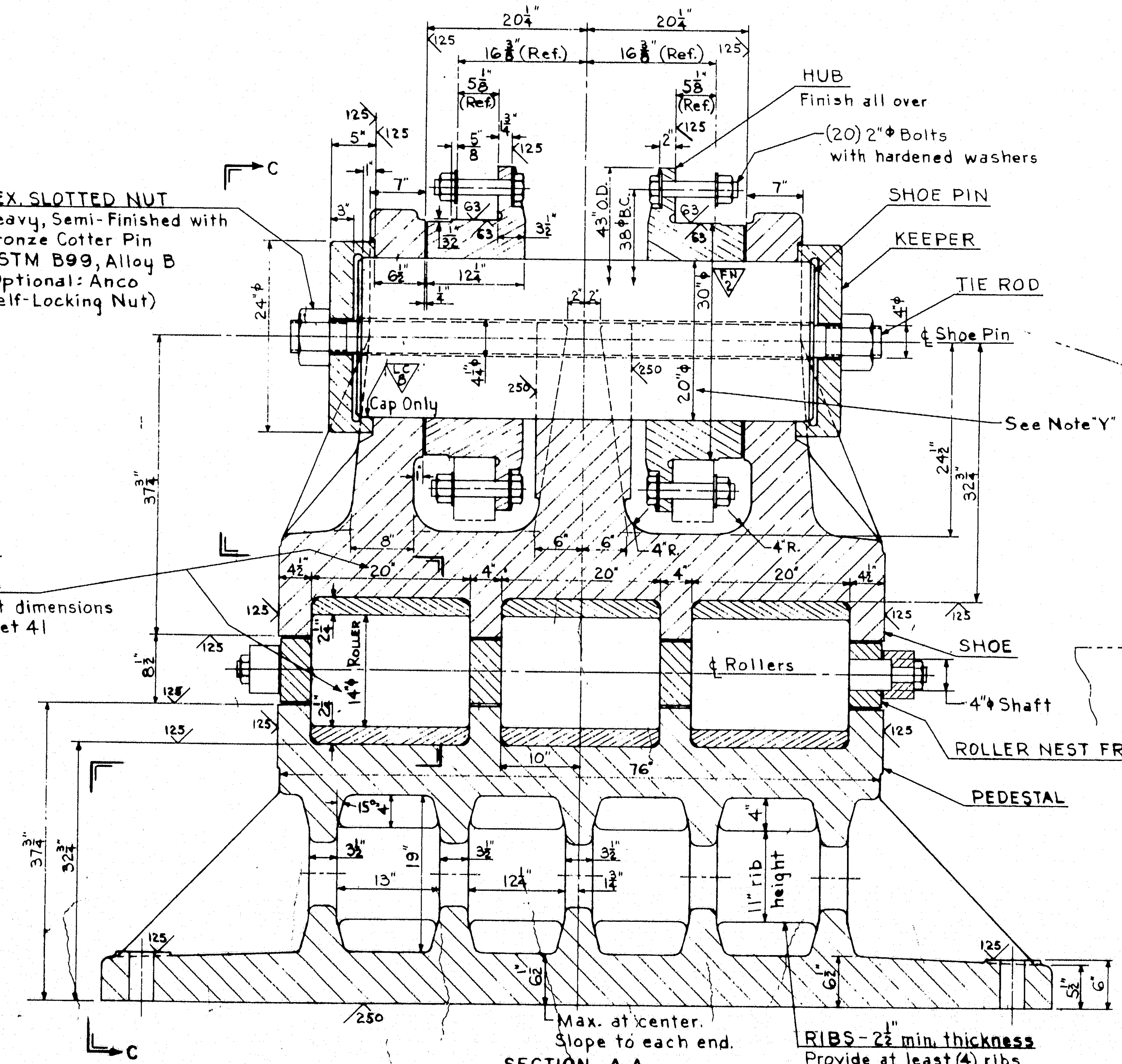
20¼"
16⅜" (Ref.)
5⅛" (Ref.)
125
63
HUB
Finish all over
(20) 2"φ Bolts with hardened washers
SHOE PIN
KEEPER
TIE ROD
℄ Shoe Pin
HEX. SLOTTED NUT
Heavy, Semi-Finished with Bronze Cotter Pin ASTM B99, Alloy B (Optional: Anco Self-Locking Nut)
C
43" O.D.
38φ B.C.
30"φ
FN 2
LC 8
Cap Only
20"φ
4¼"φ
24"φ
250
See Note "Y"
24½"
32¾"
37¾"
8"
6"
4"R.
NOMINAL
For exact dimensions See Sheet 41
4½"
20"
4"
ROLLER
14"φ
8½"
℄ Rollers
4"φ Shaft
SHOE
ROLLER NEST FRAME
PEDESTAL
10"
76"
15°
3½"
13"
19"
12¼"
1¾"
4"
11" rib height
6½"
5½"
6"
Max. at center. Slope to each end.
RIBS - 2½ min. thickness
Provide at least (4) ribs in each of the (4) chambers

SECTION A-A
Scale: 1"=1'-0"

NOTE "Y": 20"φ Pin in 20 1/32 φ bore.
63 Finish for pin & bore.

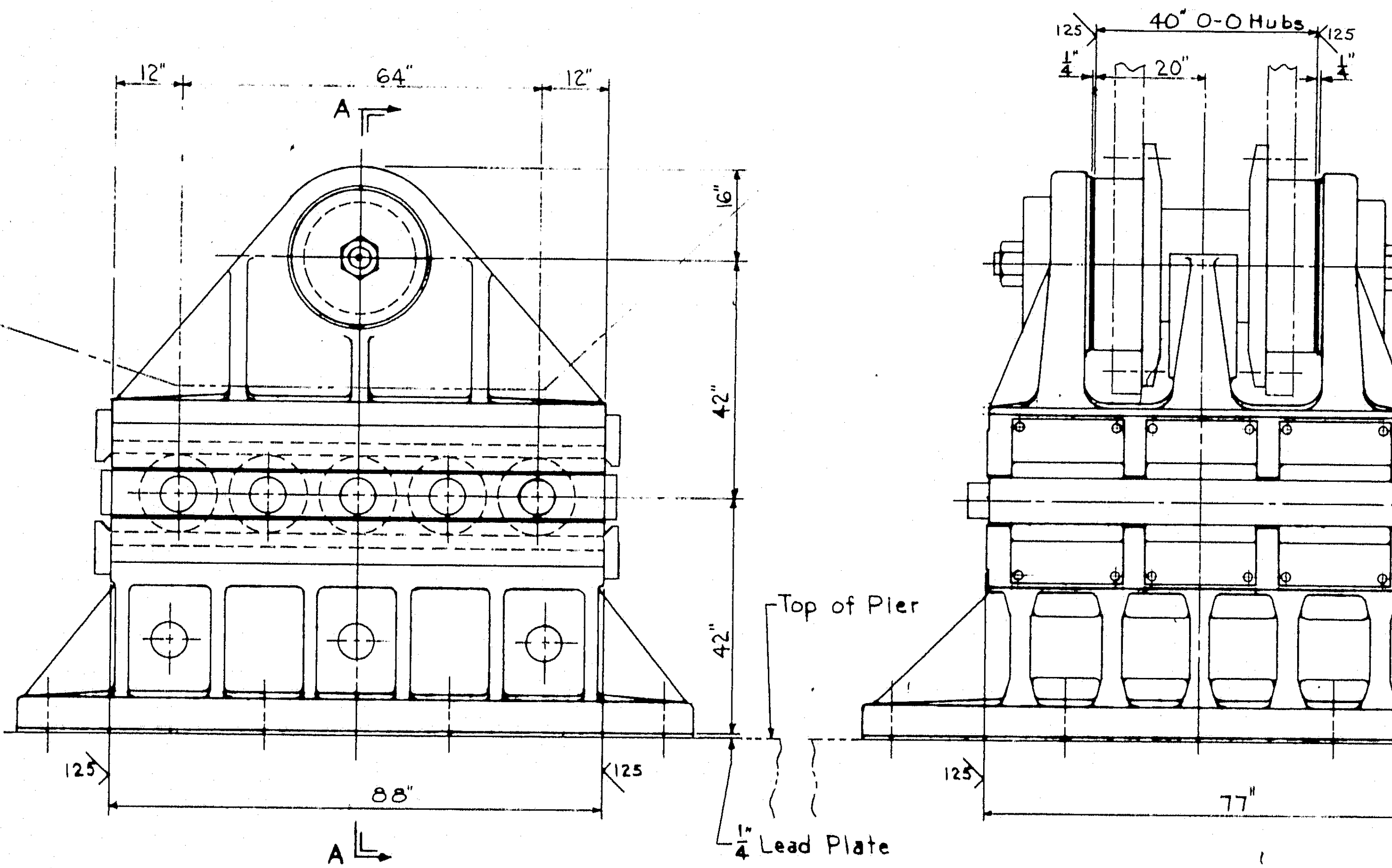
12"
64"
12"
A
16"
42"
42"
88"
125
Top of Pier
¼" Lead Plate
40" O-O Hubs
¼"
20"
77"

EXPANSION SHOE ASSEMBLY
2 ASSEMBLIES REQ'D.
Scale: ½"=1'-0"

AS BUILT
R.W. Christie 2/5/73

5

DESIGN — A.J.S.
TRACE — Patrick J. Carey
CHECK —
BRIDGE NO. IN CHARGE OF — Richard W. Christie

NEW HAMPSHIRE
DEPARTMENT OF PUBLIC WORKS AND HIGHWAYS
AND
MAINE STATE HIGHWAY COMMISSION
INTERSTATE 95 BRIDGE
OVER
PISCATAQUA RIVER
BETWEEN
PORTSMOUTH, NEW HAMPSHIRE AND KITTERY, MAINE
RIVER BRIDGE

MAIN PIER EXPANSION SHOES I

SHEET 40 OF 54

HARDESTY & HANOVER
CONSULTING ENGINEERS
NEW YORK, N. Y.

129-135

B. P. R. REG. NO.	STATE	PROJECT NUMBER	SHEET NO.	TOTAL SHEETS
1	MAINE	I-95-1(22)16	41	54

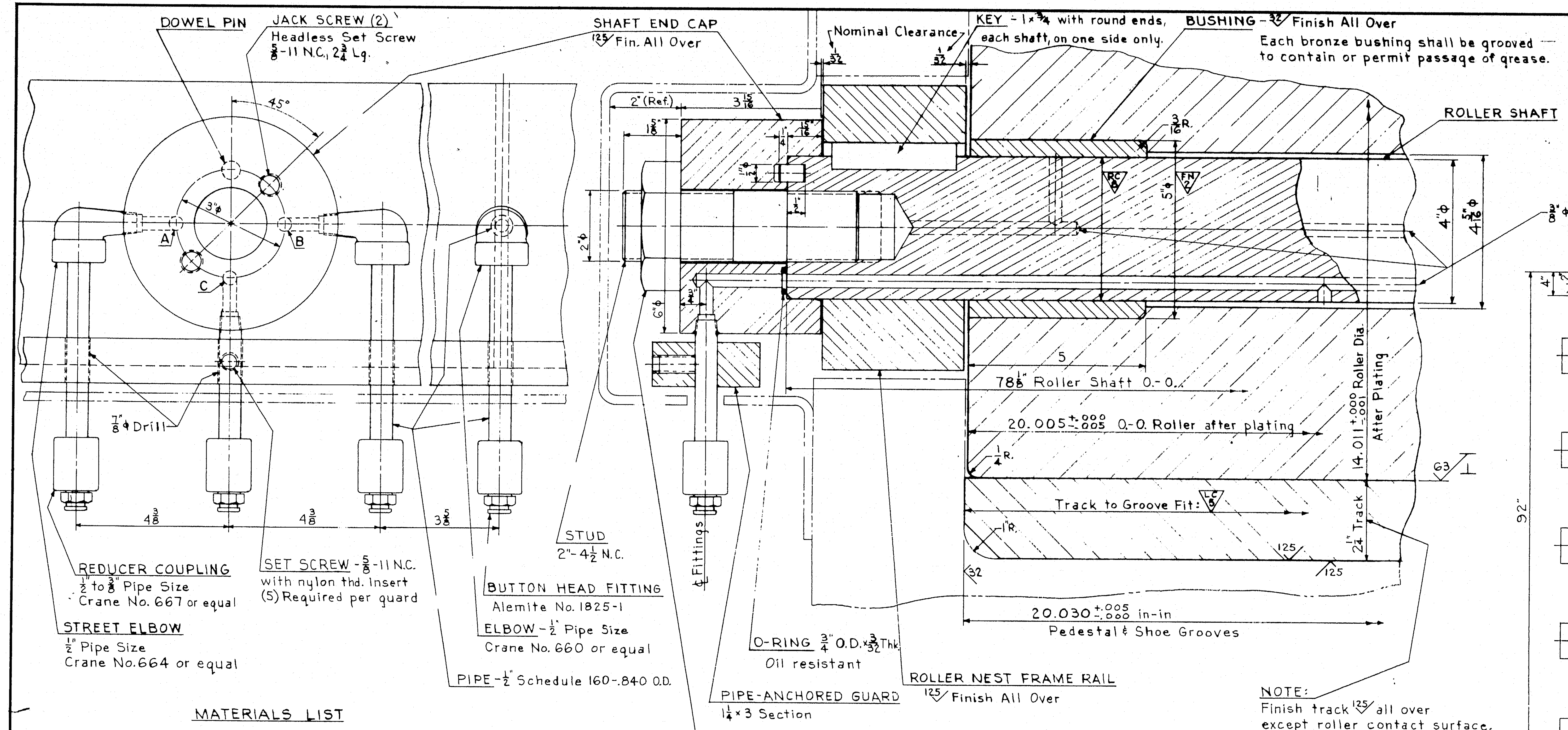
DOWEL PIN
JACK SCREW (2)
Headless Set Screw
5/8-11 N.C., 2 3/4 Lg.
45°
3"φ
A
B
C
7/8"φ Drill
4 3/8
4 3/8
3 5/8
REDUCER COUPLING
1/2" to 3/8" Pipe Size
Crane No. 667 or equal
STREET ELBOW
1/2" Pipe Size
Crane No. 664 or equal
SET SCREW - 5/8-11 N.C.
with nylon thd. Insert
(5) Required per guard
PIPE - 1/2" Schedule 160-.840 O.D.
STUD
2"-4 1/2 N.C.
BUTTON HEAD FITTING
Alemite No. 1825-1
ELBOW - 1/2" Pipe Size
Crane No. 660 or equal
SHAFT END CAP
125 Fin. All Over
2"(Ref.)
3 15/16
1 5/8"
2"φ
6"φ
℄ Fittings
Nominal Clearance
1/32
KEY - 1×3/4 with round ends, each shaft, on one side only.
BUSHING - 32 Finish All Over
Each bronze bushing shall be grooved to contain or permit passage of grease.
ROLLER SHAFT
3/16 R.
RC 8
FN 2
5"φ
4"φ
4 5/16"φ
3/8"φ Lubrication Passages
5
78 1/8" Roller Shaft O.-O.
20.005 +.000 -.005 O.-O. Roller after plating
14.011 +.000 -.001 Roller Dia. After Plating
1/4 R.
63
Track to Groove Fit: LC 5
2 1/4" Track
1 R.
32
125
20.030 +.005 -.000 in-in
Pedestal & Shoe Grooves
O-RING 3/4" O.D.×3/32 Thk.
Oil resistant
ROLLER NEST FRAME RAIL
125 Finish All Over
PIPE-ANCHORED GUARD
1 1/4×3 Section
NUT
Anco Jam Nut
Self-locking

NOTE:
Finish track 125 all over except roller contact surface.

ENLARGED DETAIL OF ROLLER NEST

Scale: 6"=1'-0".

MATERIALS LIST

ROLLER NEST FRAME	Cast Bronze	ASTM B22, Alloy E
END CAP (for Roller Shaft)	Carbon Steel Forging	ASTM A235, Class E
ROLLER BUSHING	Cast Bronze	ASTM B144, Alloy 3C
STUD (for Roller Shaft)	Stainless Steel	ASTM A320, Grade B8
SCREW (for Frame)		
SET SCREW (for Guard)		
JACK SCREW (for End Cap)		
SCREW (for Track Flanges)		
STUD NUT (Self-locking)	Stainless Steel	ASTM A194, Grade 8
SHAFT KEY	Cold Finished Steel	ASTM A108, Grade 1045
GUARD (Pipe-Anchored)	Brass Bar	ASTM B21, Alloy B
PIPE (Seamless or Welded)	Alloy Steel	ASTM A333, Grade 4
PIPE FITTINGS	Forged Steel	6000 p.s.i. W.O.G.

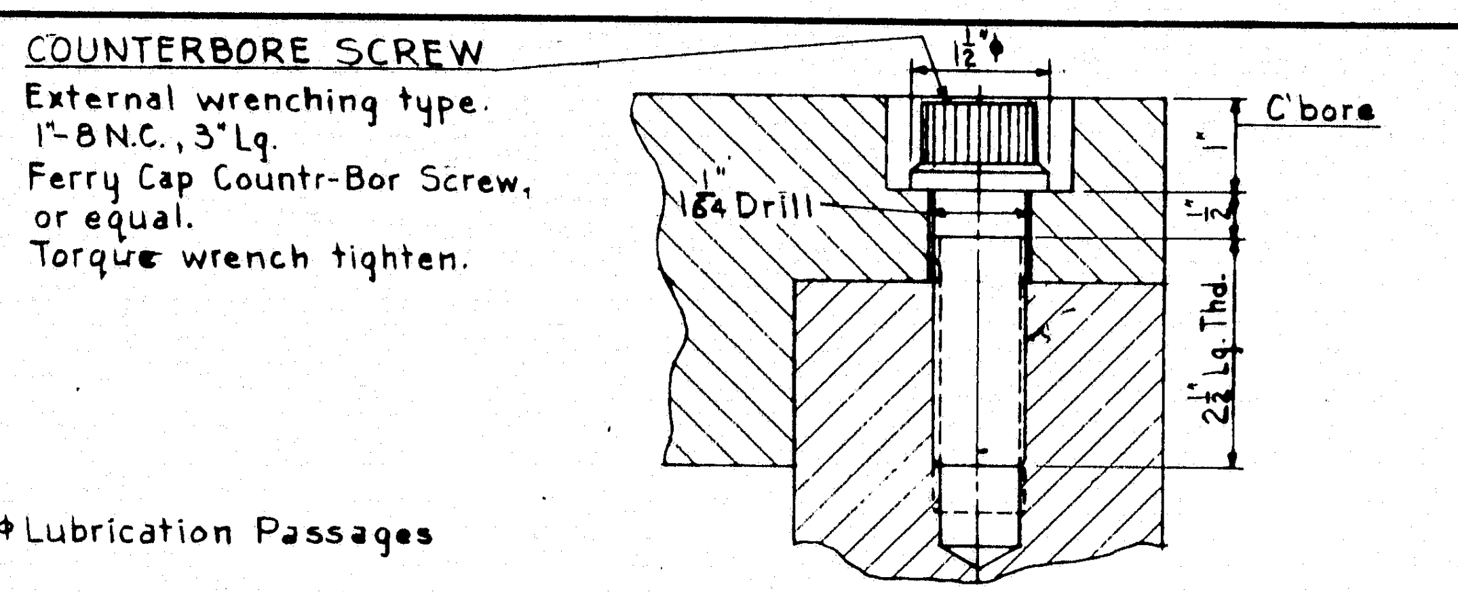
COUNTERBORE SCREW
External wrenching type.
1"-8 N.C., 3" Lg.
Ferry Cap Countr-Bor Screw, or equal.
Torque wrench tighten.
1 1/2"φ
C'bore
1"
1 1/64 Drill
1/2"
2 1/2" Lg. Thd.

FRAME SCREW DETAIL

Scale: 6"=1'-0"

(16) Screws req'd. per frame

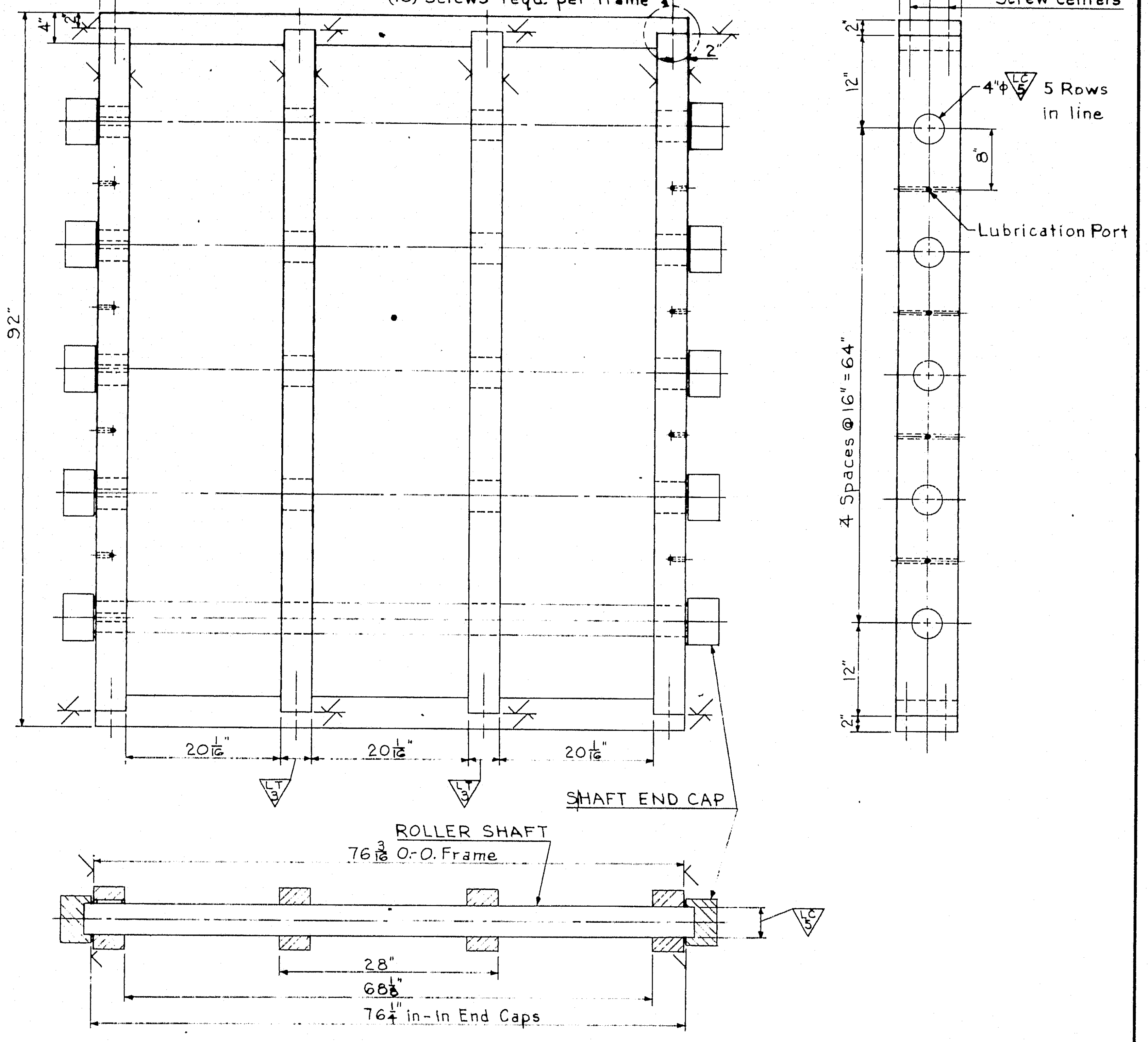
2"
4"
2"
92"
20 1/2"
20 1/2"
20 1/2"
LC 5
SHAFT END CAP
ROLLER SHAFT
76 3/8 O.-O. Frame
28"
68 1/8"
76 1/4" in-in End Caps
8"
4"
1 1/2"
1 1/2"
Screw Centers
12"
4"φ LC 5 5 Rows in line
8"
Lubrication Port
4 Spaces @ 16" = 64"

ROLLER NEST FRAME ASSEMBLY

Scale: 1"=1'-0"

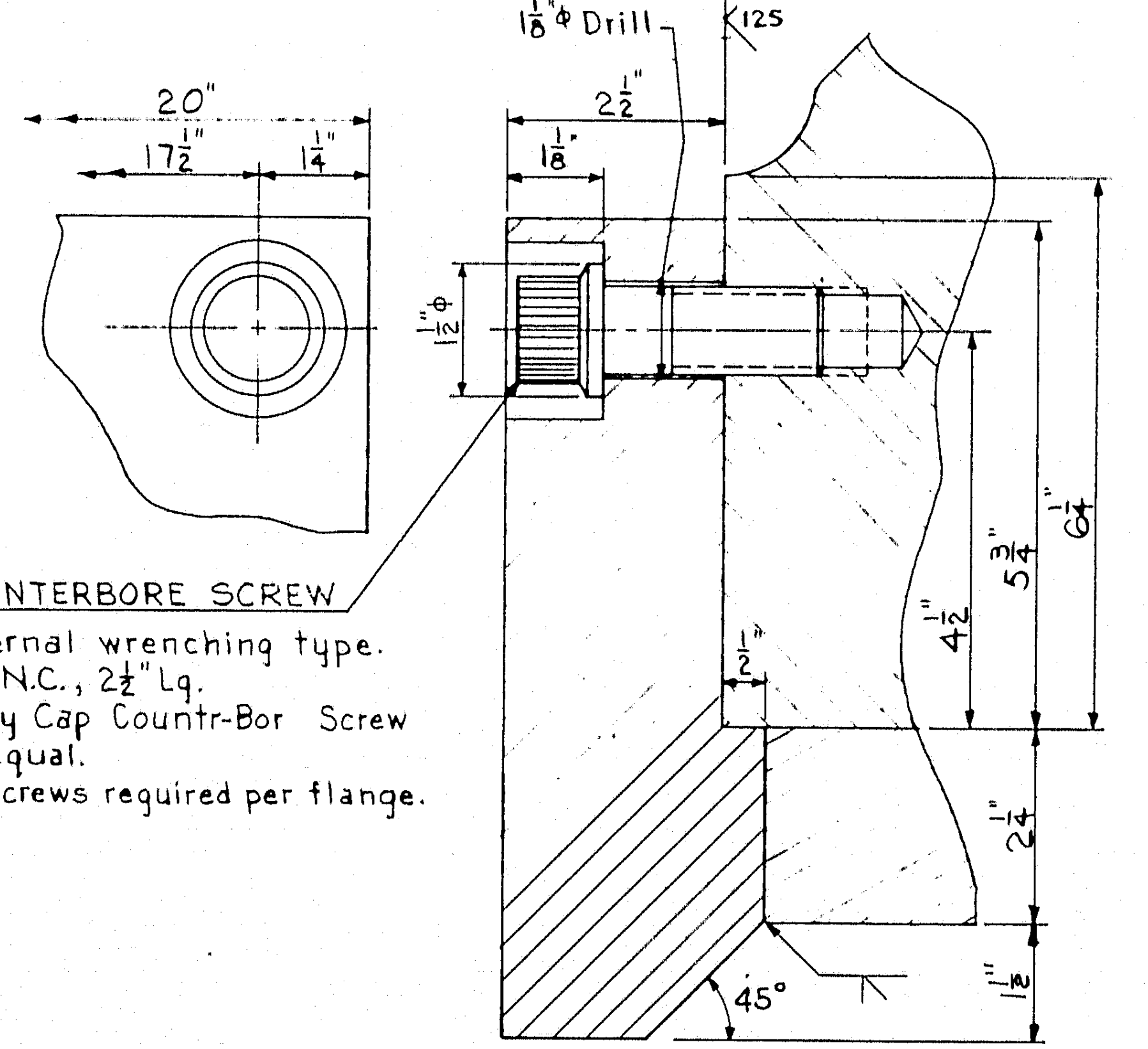
20"
17 1/2"
1 1/4"
1 1/2"
88 LC 5
1 1/16"φ Drill
125
2 1/2"
1 1/8"
COUNTERBORE SCREW
External wrenching type.
1"-8 N.C., 2 1/2" Lg.
Ferry Cap Countr-Bor Screw or equal.
(2) Screws required per flange.
1/2"
4 1/2"
5 3/4"
6 1/4"
2 1/4"
1 1/8"
45°

DETAIL OF TRACK FLANGE

For Shoe & Pedestal
Scale: 6"=1'-0"

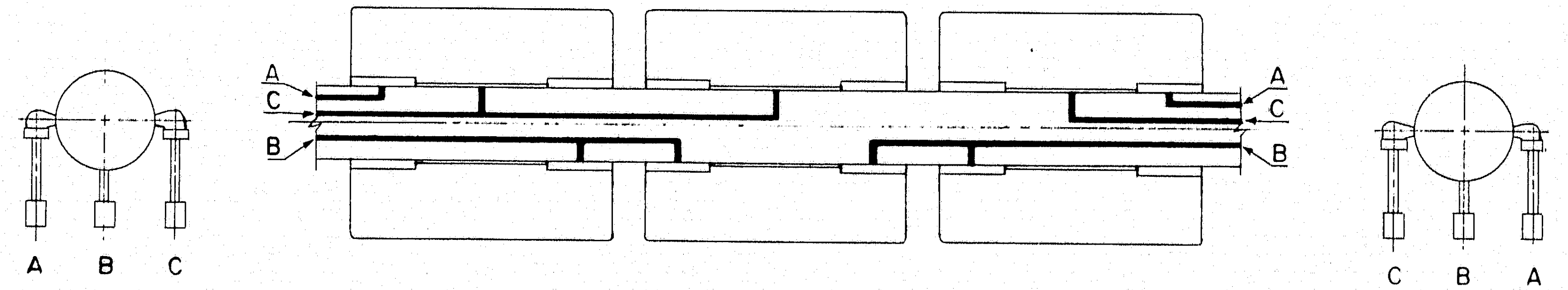
A
B
C
A
C
B
A
C
B
C
B
A

SHAFT LUBRICATION SCHEME

All Lubrication Passages 3/8"φ
Scale: None

AS BUILT
R.W. Christie 2/5/73

5

DESIGN — M.D.
TRACE — Patrick J. Carey
CHECK —

BRIDGE NO.
IN CHARGE OF — Richard W. Christie

NEW HAMPSHIRE
DEPARTMENT OF PUBLIC WORKS AND HIGHWAYS
AND
MAINE STATE HIGHWAY COMMISSION
INTERSTATE 95 BRIDGE
OVER
PISCATAQUA RIVER
BETWEEN
PORTSMOUTH, NEW HAMPSHIRE AND KITTERY, MAINE
RIVER BRIDGE

MAIN PIER EXPANSION SHOES II

SHEET 41 OF 54

HARDESTY & HANOVER
CONSULTING ENGINEERS
NEW YORK, N. Y.

129-136

B.P.R. REG. NO.	STATE	PROJECT NUMBER	SHEET NO.	TOTAL SHEETS
1	MAINE	I-95-1(22)16	42	54

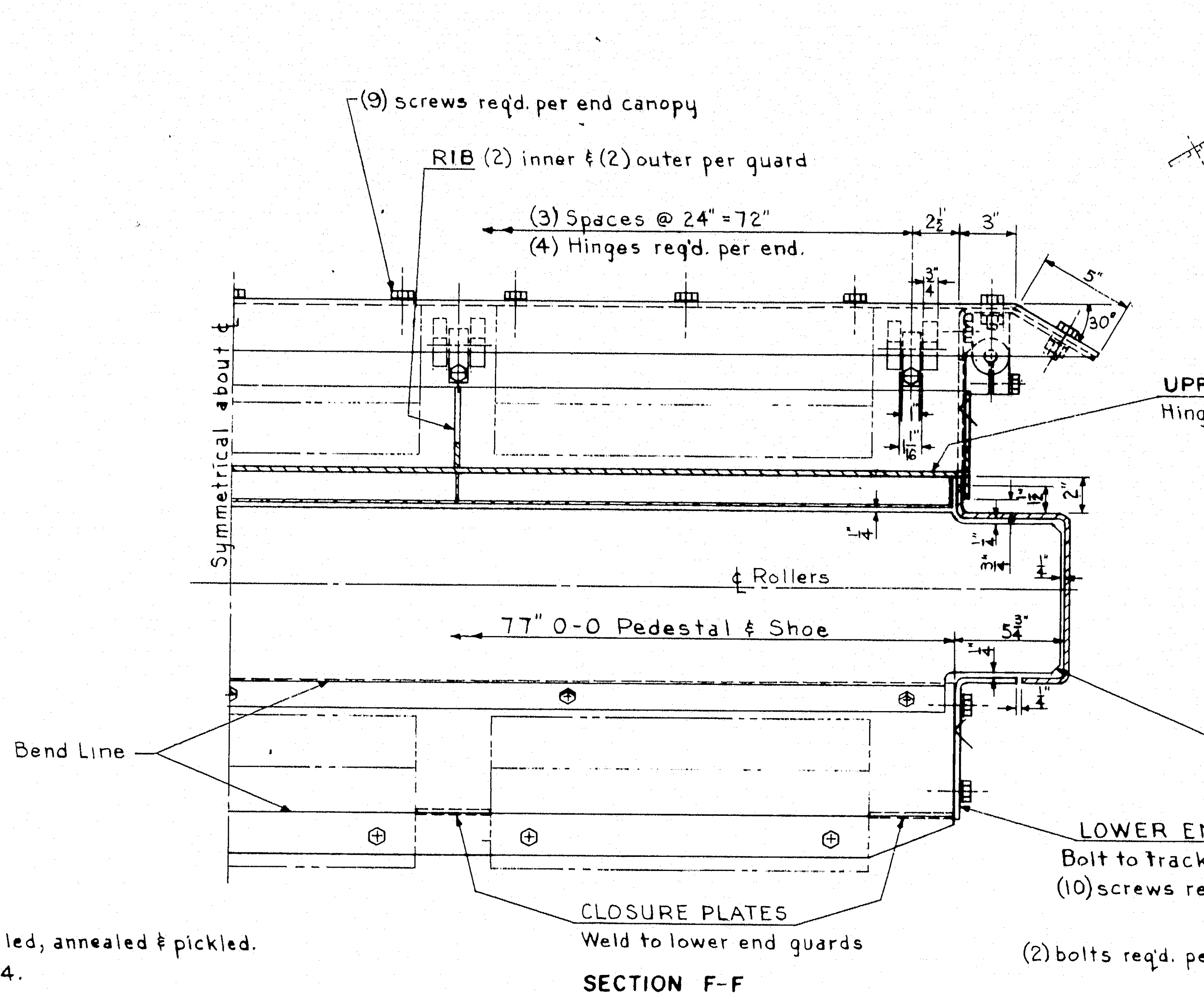
(9) screws req'd. per end canopy
RIB (2) inner & (2) outer per guard
(3) Spaces @ 24" = 72"
(4) Hinges req'd. per end.
Symmetrical about ℄
UPPER END GUARD
Hinged to end canopy
℄ Rollers
77" 0-0 Pedestal & Shoe
Bend Line
1/16" Clearance
END BAFFLE
Bolt to lower end guard
(5) bolts req'd. per baffle
LOWER END GUARD
Bolt to track flanges & pedestal
(10) screws req'd. per guard
CLOSURE PLATES
Weld to lower end guards

SECTION F-F
scale: 2" = 1'-0"

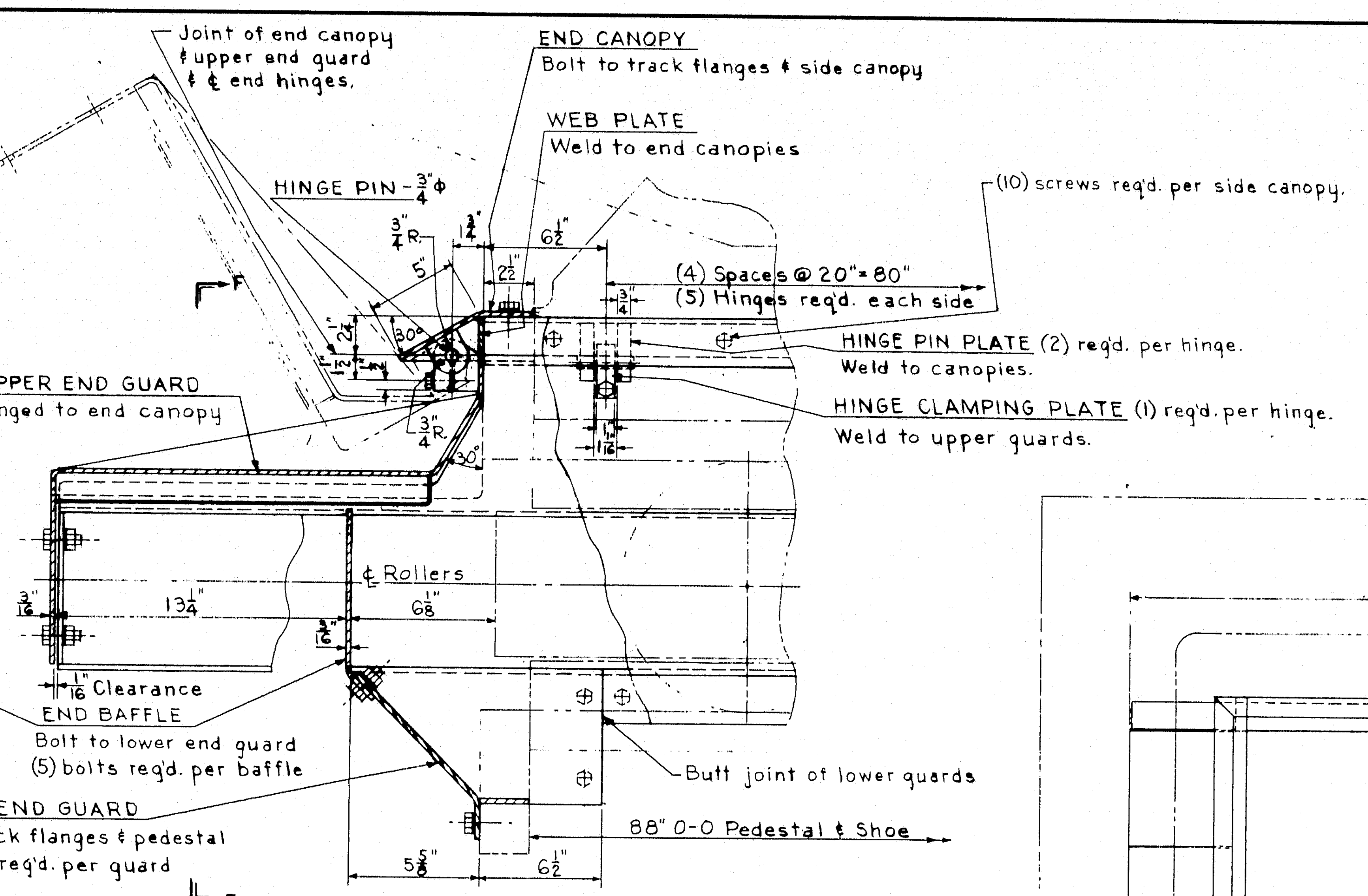
Joint of end canopy
& upper end guard
& ℄ end hinges.
END CANOPY
Bolt to track flanges & side canopy
WEB PLATE
Weld to end canopies
HINGE PIN - 3/4" φ
(10) screws req'd. per side canopy.
(4) Spaces @ 20" = 80"
(5) Hinges req'd. each side
HINGE PIN PLATE (2) req'd. per hinge.
Weld to canopies.
HINGE CLAMPING PLATE (1) req'd. per hinge.
Weld to upper guards.
F
℄ Rollers
Butt joint of lower guards
88" 0-0 Pedestal & Shoe

SECTION D-D
scale: 2" = 1'-0"

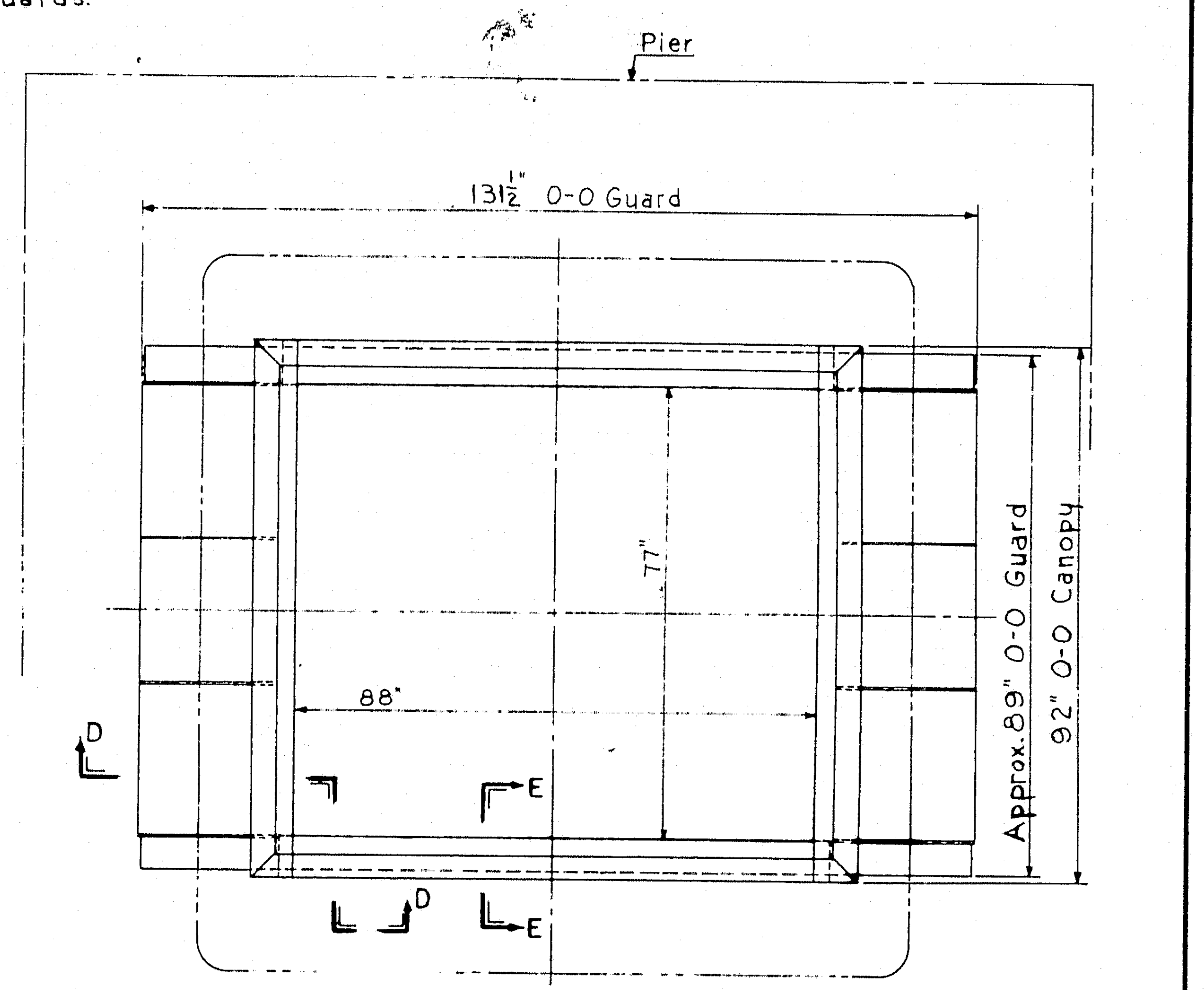
Pier
131 1/2" 0-0 Guard
Approx. 89" 0-0 Guard
92" 0-0 Canopy
77"
88"
D
E

MATERIALS LIST

CANOPIES, GUARDS, HINGE PLATES, CLOSURE PLATES, BAFFLES & RIBS. — Stainless Steel - hot-rolled, annealed & pickled. ASTM A240, Type 304. Passivate after fabrication.

HINGE PIN — Brass Bar — ASTM B21, Alloy B - hard

MOUNTING & CLAMPING SCREWS & BOLTS. — Stainless Steel — ASTM A320, Grade B8

NOTE:
All Guards, Canopies, Closure Plates, Ribs & Web Plates made of 3/16" thick plate
All mounting, clamping and holding screws & bolts shall be 1/2"-13 N.C.

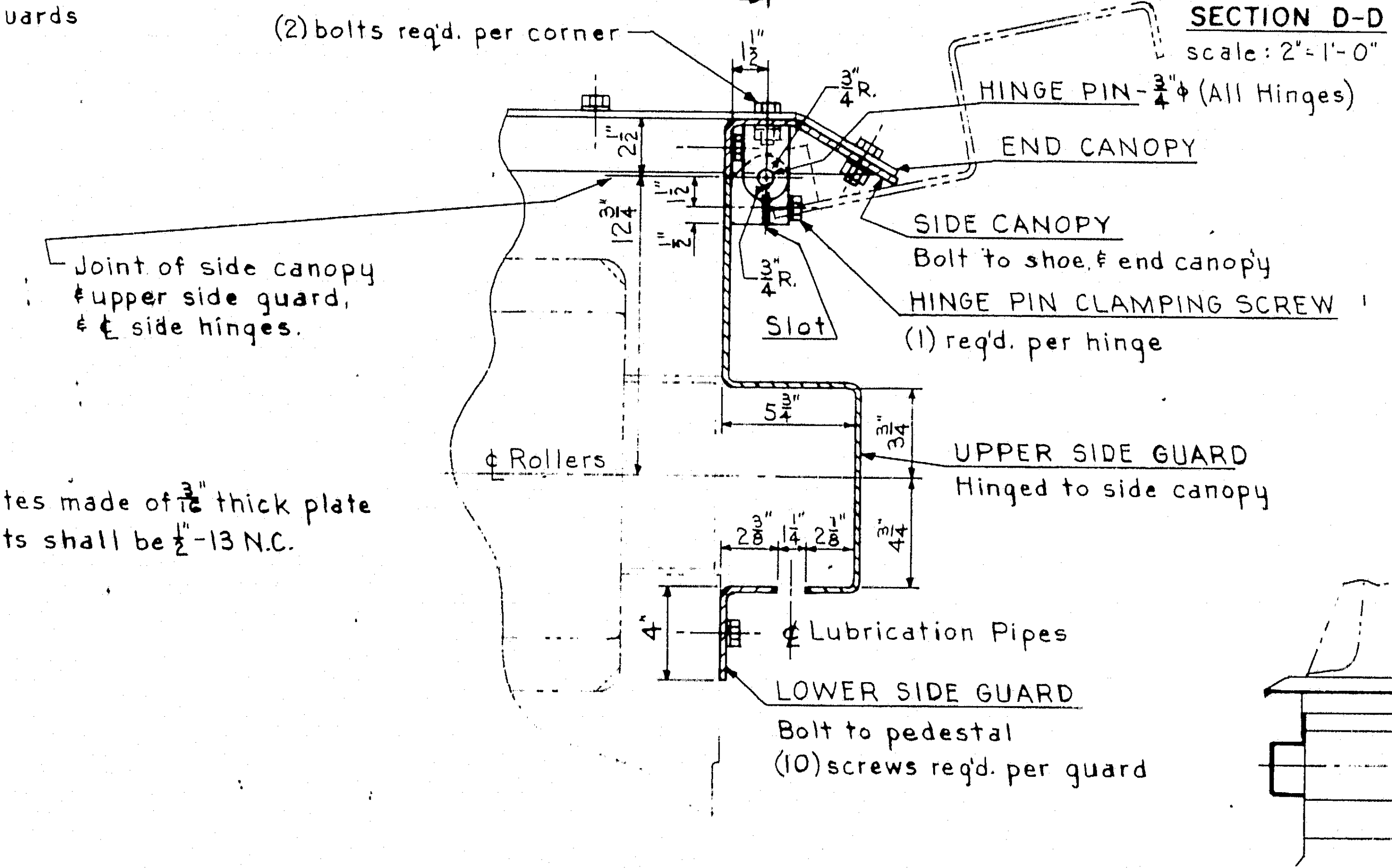
(2) bolts req'd. per corner
HINGE PIN - 3/4" φ (All Hinges)
END CANOPY
SIDE CANOPY
Bolt to shoe & end canopy
HINGE PIN CLAMPING SCREW
(1) req'd. per hinge
Joint of side canopy
& upper side guard,
& ℄ side hinges.
Slot
℄ Rollers
UPPER SIDE GUARD
Hinged to side canopy
℄ Lubrication Pipes
LOWER SIDE GUARD
Bolt to pedestal
(10) screws req'd. per guard

SECTION E-E
scale: 2" = 1'-0"

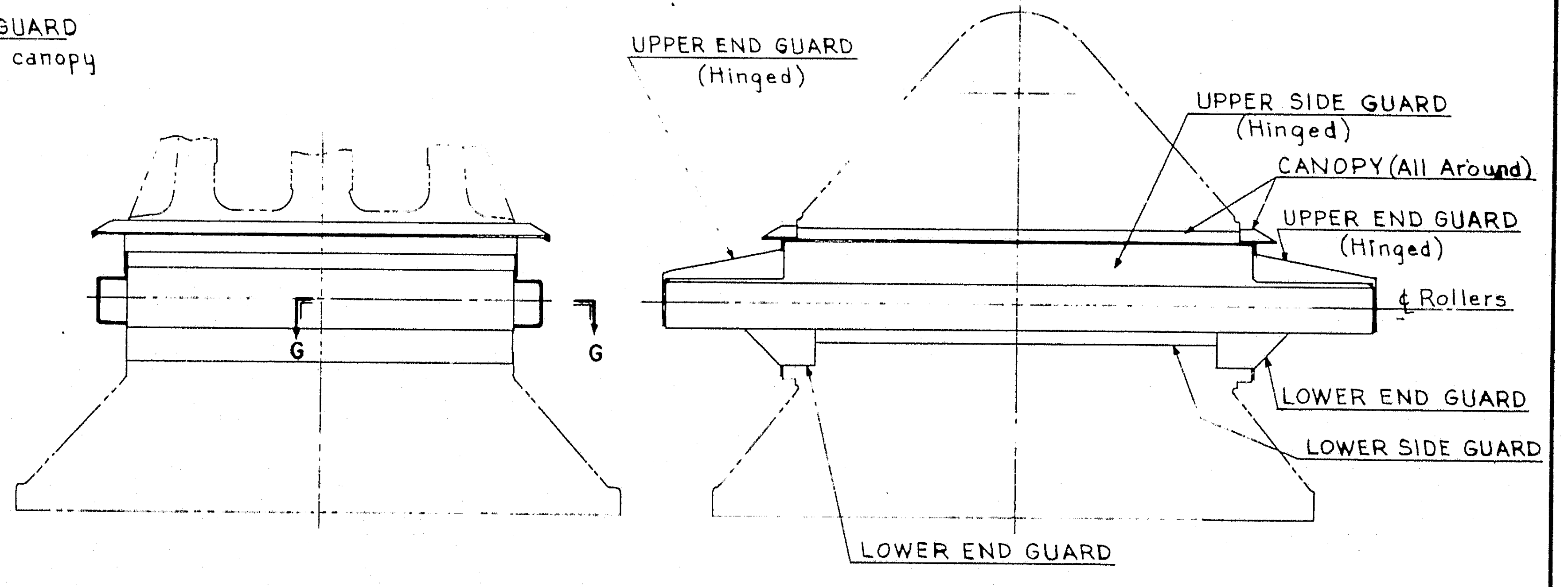
UPPER END GUARD
(Hinged)
UPPER SIDE GUARD
(Hinged)
CANOPY (All Around)
UPPER END GUARD
(Hinged)
℄ Rollers
G
LOWER END GUARD
LOWER SIDE GUARD
LOWER END GUARD

EXPANSION SHOE GUARD ASSEMBLY
2 ASSEMBLIES REQ'D.
scale: 1/2" = 1'-0"

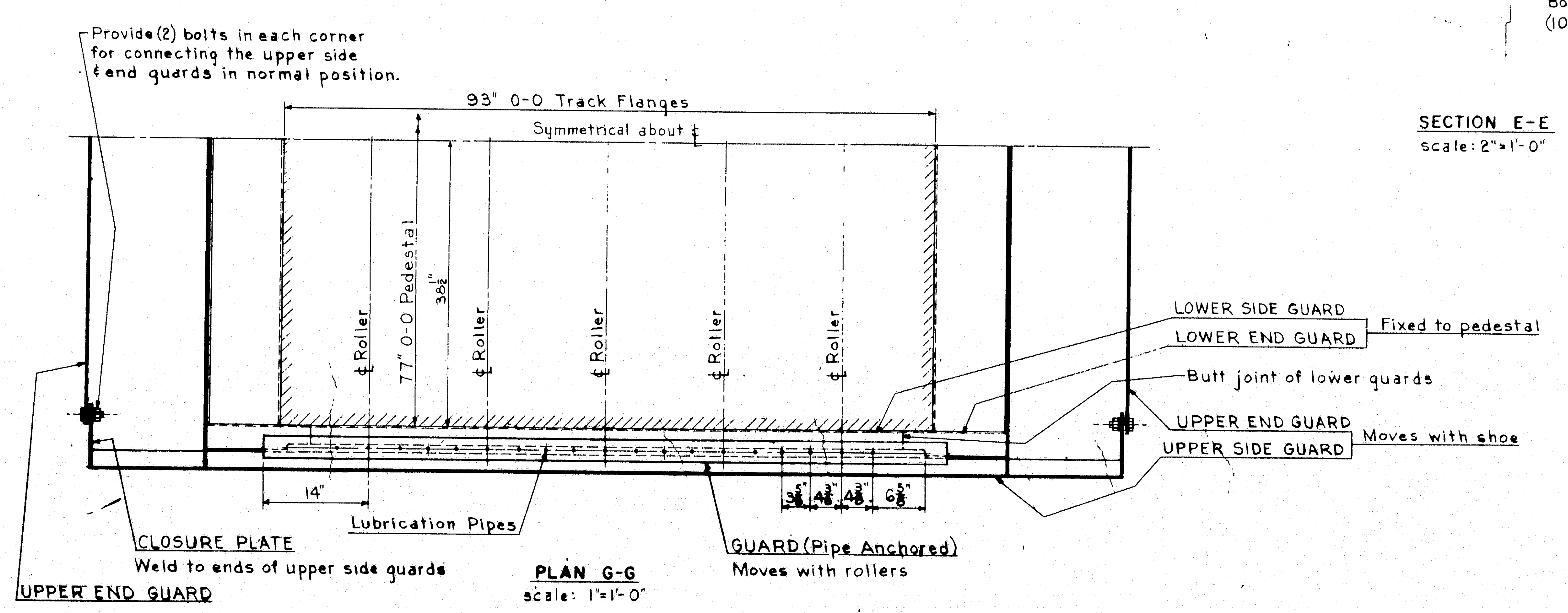
Provide (2) bolts in each corner
for connecting the upper side
& end guards in normal position.
93" 0-0 Track Flanges
Symmetrical about ℄
77" 0-0 Pedestal
38 1/2"
℄ Roller
℄ Roller
℄ Roller
℄ Roller
℄ Roller
LOWER SIDE GUARD
LOWER END GUARD
Fixed to pedestal
Butt joint of lower guards
UPPER END GUARD
UPPER SIDE GUARD
Moves with shoe
14"
Lubrication Pipes
GUARD (Pipe Anchored)
Moves with rollers
CLOSURE PLATE
Weld to ends of upper side guards
UPPER END GUARD

PLAN G-G
scale: 1" = 1'-0"

NOTE:
Provide means of holding hinged guards in open position.
Do not paint guards.

AS BUILT
R.W. Christie 2/5/73

HARDESTY & HANOVER
CONSULTING ENGINEERS
NEW YORK, N.Y.

5

DESIGN – M.D.
TRACE –
CHECK –
BRIDGE NO.
IN CHARGE OF: Richard W. Christie

NEW HAMPSHIRE
DEPARTMENT OF PUBLIC WORKS AND HIGHWAYS
AND
MAINE STATE HIGHWAY COMMISSION
INTERSTATE 95 BRIDGE
OVER
PISCATAQUA RIVER
BETWEEN
PORTSMOUTH, NEW HAMPSHIRE AND KITTERY, MAINE
RIVER BRIDGE

MAIN PIER EXPANSION SHOES III

SHEET 42 OF 54

129-137

B. P. R. REG. NO.	STATE	PROJECT NUMBER	SHEET NO.	TOTAL SHEETS
1	MAINE	I—95—1(22)16	43	54

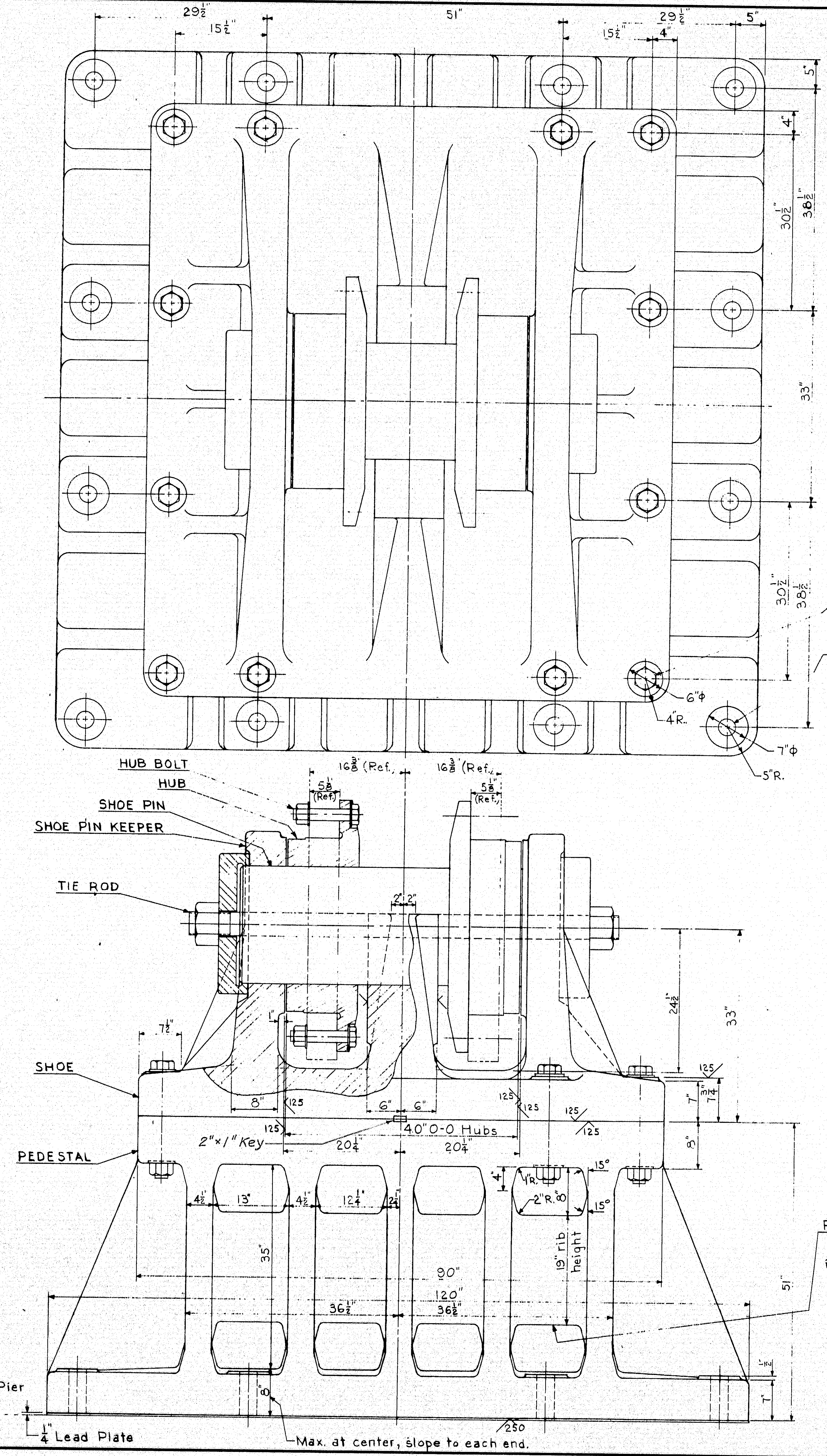

29½"
15½"
51"
29½"
15½"
4"
5"
5"
4"
30½"
38½"
33"
30½"
38½"
6"φ
4"R.
7"φ
5"R.
HUB BOLT
HUB
SHOE PIN
SHOE PIN KEEPER
TIE ROD
16⅜" (Ref.)
16⅜" (Ref.)
5⅛" (Ref.)
5⅛" (Ref.)
2" 2"
1"
7½"
SHOE
PEDESTAL
8"
125
6" 6"
40"0-0 Hubs
2"×1" Key
20¼"
20¼"
24½"
33"
7"
7¾"
9"
4½"
13"
4½"
12¼"
2¼"
4"
1"R.
2"R.
8"
15°
15°
35"
19" rib height
90"
120"
36½"
36½"
51"
½"
7"
8"
Top of Pier
¼" Lead Plate
Max. at center, slope to each end.
250

2$\frac{9}{16}$" Drill for
(12, 2½"φ Shoe Bolts
ASTM A490
with hardened washers

3⅜" Drill for (12) 3"φ Anchor Bolts

For location of As-Built anchor bolts, see Shop Drawings.

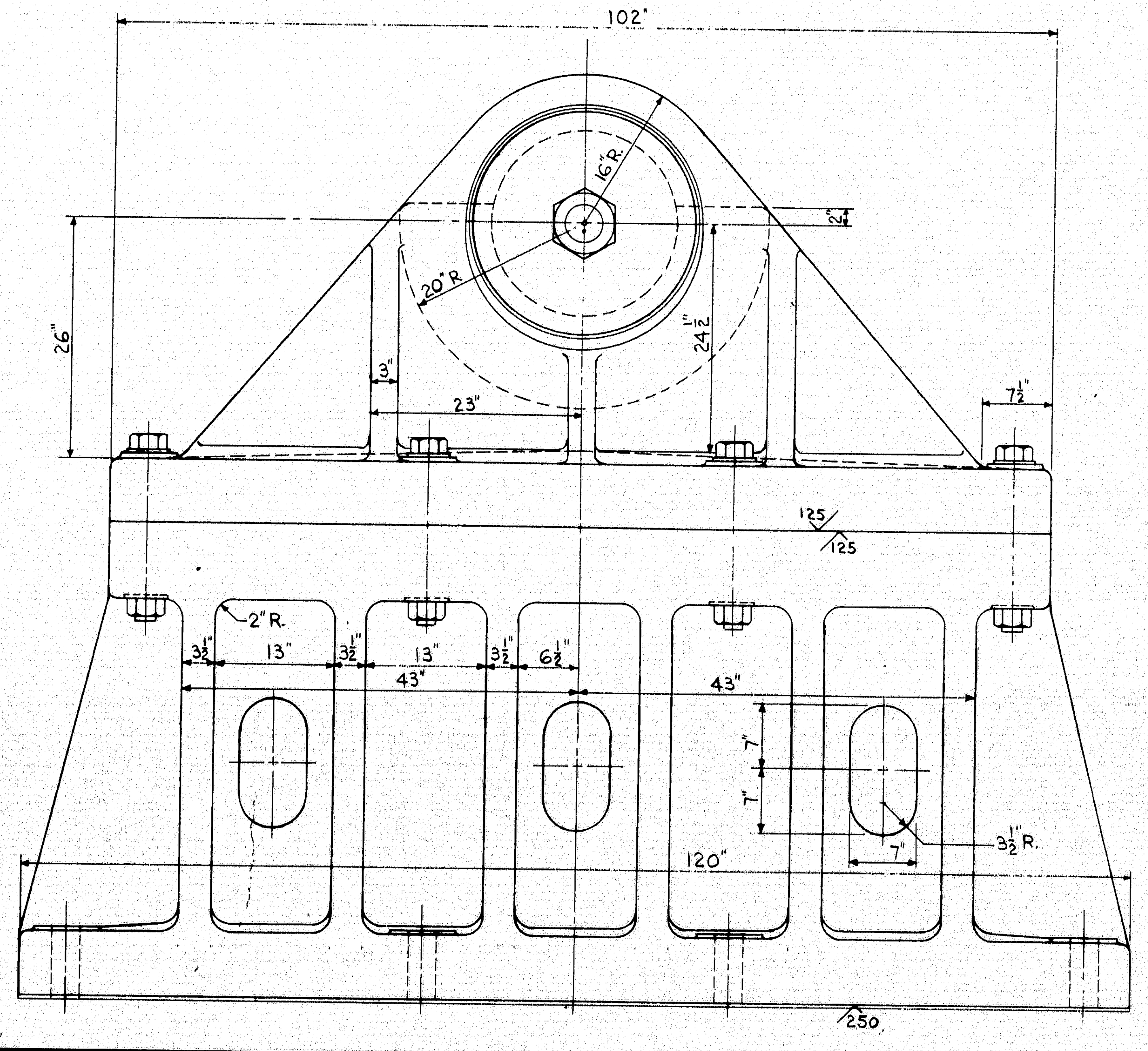

102"
16"R.
20"R
2"
26"
24½"
3"
23"
7½"
125
125
2"R.
3½"
13"
3½"
13"
3½"
6½"
43"
43"
7"
7"
3½"R.
7"
120"
250

Note:
For corresponding dimensions & materials see Sheet 40

FIXED SHOE ASSEMBLY

2 ASSEMBLIES REQ'D.

Scale: 1" = 1'-0"

Ribs - 3½" min. thickness.
Provide at least (4) ribs
in each of (4) chambers.

AS BUILT
R.W. Christie 2/5/73

HARDESTY & HANOVER
CONSULTING ENGINEERS
NEW YORK, N. Y.

5

DESIGN — M.D.
TRACE — Patrick J. Carey
CHECK —

BRIDGE NO.
IN CHARGE OF — Richard W. Christie

NEW HAMPSHIRE
DEPARTMENT OF PUBLIC WORKS AND HIGHWAYS
AND
MAINE STATE HIGHWAY COMMISSION
INTERSTATE 95 BRIDGE
OVER
PISCATAQUA RIVER
BETWEEN
PORTSMOUTH, NEW HAMPSHIRE AND KITTERY, MAINE

MAIN PIER FIXED SHOES

SHEET 43 OF 54

129-138

B. P. R. REG. NO.	STATE	PROJECT NUMBER	SHEET NO.	TOTAL SHEETS
1	MAINE	I-95-1 (22) 16	44	54

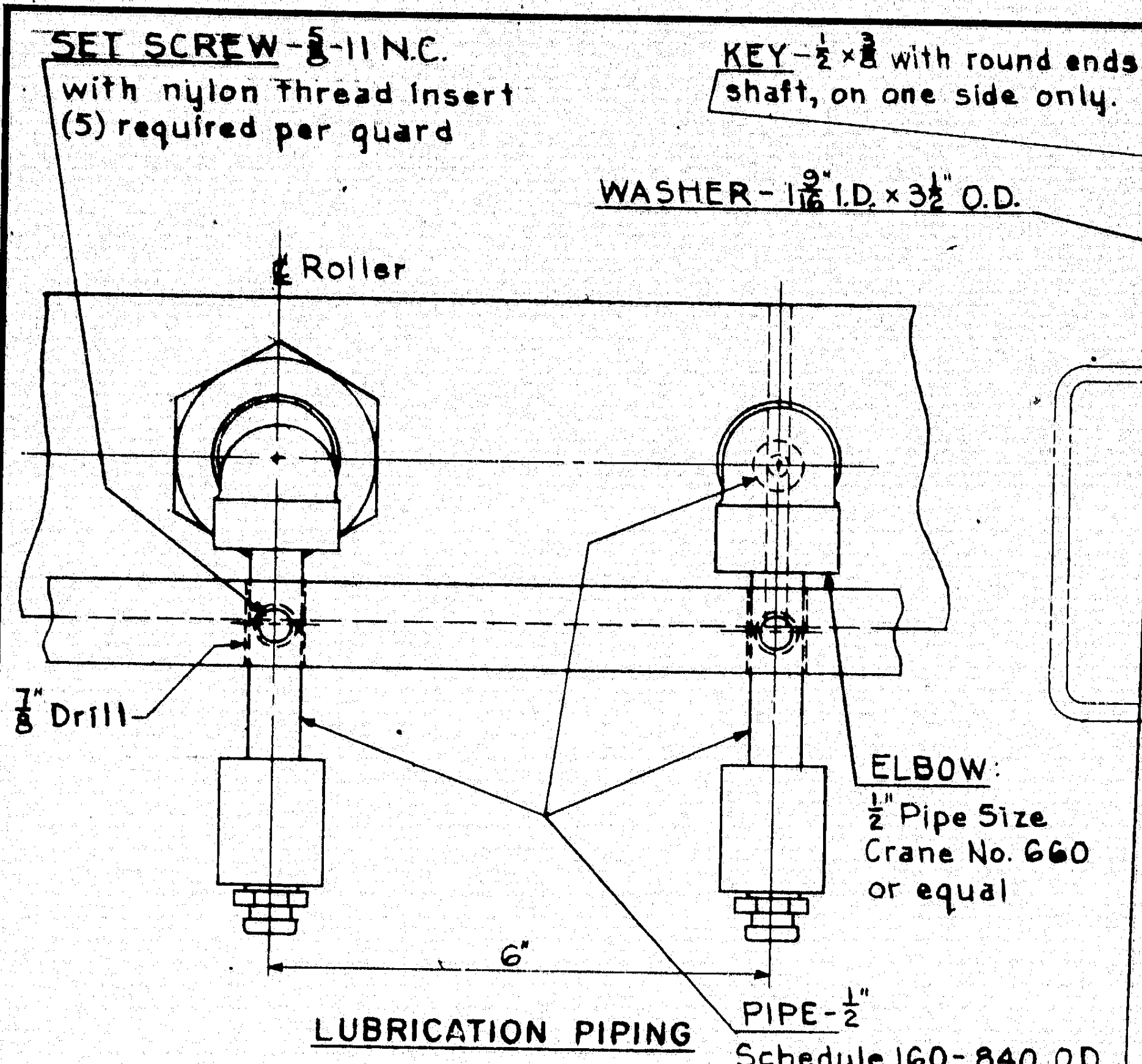

SET SCREW - 5/8-11 N.C. with nylon thread insert (5) required per guard
℄ Roller
7/8" Drill
6"
ELBOW: 1/2" Pipe Size Crane No. 660 or equal
PIPE - 1/2" Schedule 160 - .840 O.D.

LUBRICATION PIPING

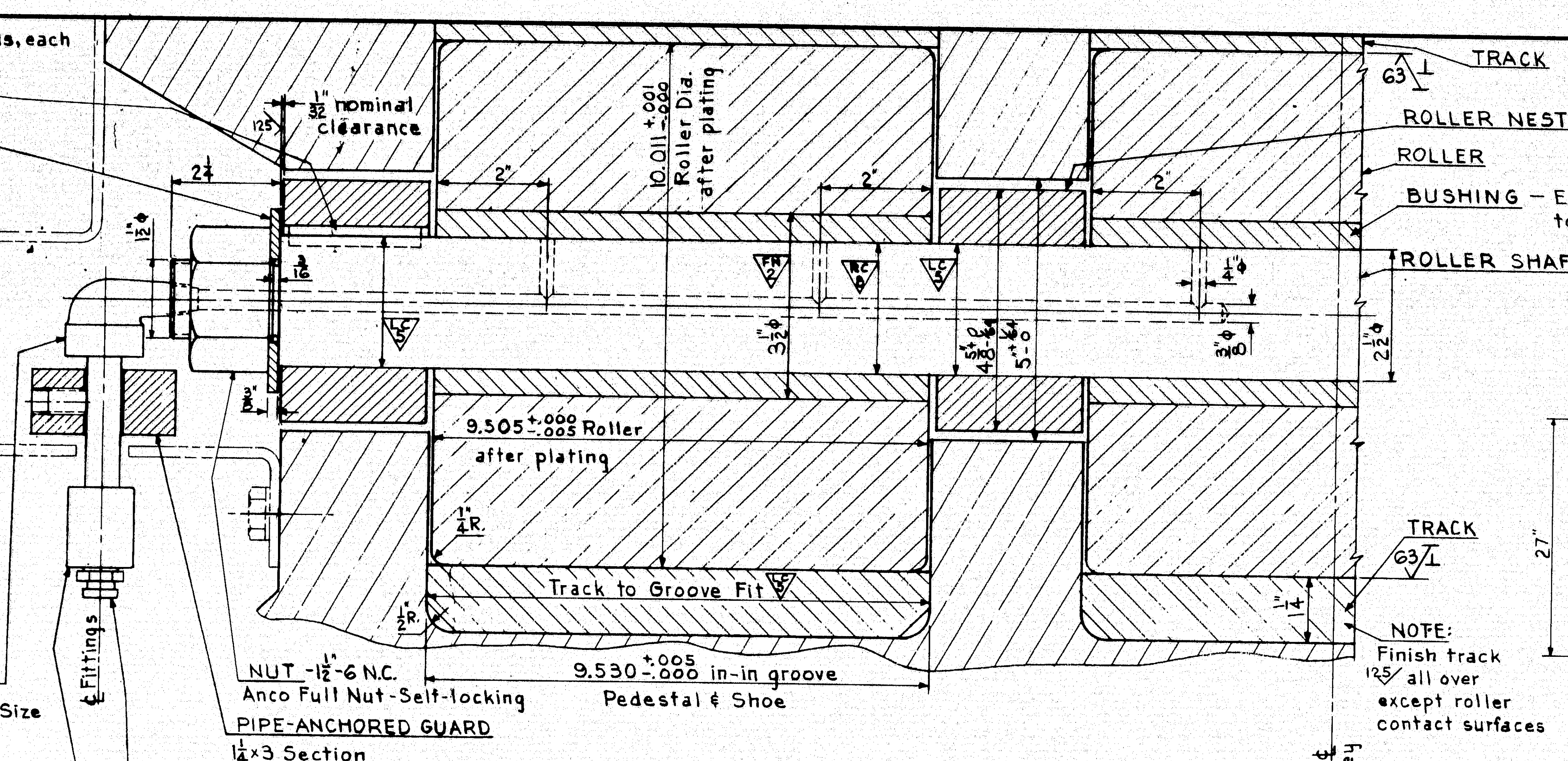

KEY - 1/2 x 3/8 with round ends, each shaft, on one side only.
1/32" nominal clearance
WASHER - 1 9/16 I.D. x 3 1/2 O.D.
2 1/4
2"
10.011 +.001 -.000 Roller Dia. after plating
9.305 +.000 -.005 Roller after plating
1/4 R.
Track to Groove Fit
9.530 +.005 -.000 in-in groove Pedestal & Shoe
NUT - 1 1/2 - 6 N.C. Anco Full Nut - Self-locking
PIPE-ANCHORED GUARD 1 1/4 x 3 Section
BUTTON HEAD FITTING Alemite No. 1825-1
REDUCER COUPLING 1/2 to 3/8 Pipe Size, Crane No. 667 or equal
STREET ELBOW: 1/2" Pipe Size Crane No. 664 or equal
℄ Fittings
TRACK
ROLLER NEST FRAME
ROLLER
BUSHING - Each bronze bushing shall be grooved to contain or permit passage of grease.
ROLLER SHAFT
NOTE: Finish track all over except roller contact surfaces
Symmetrical about ℄ except for shaft key

ENLARGED DETAIL OF ROLLER NEST
Scale: 6" = 1'-0"
For frame detail See Sheet 45

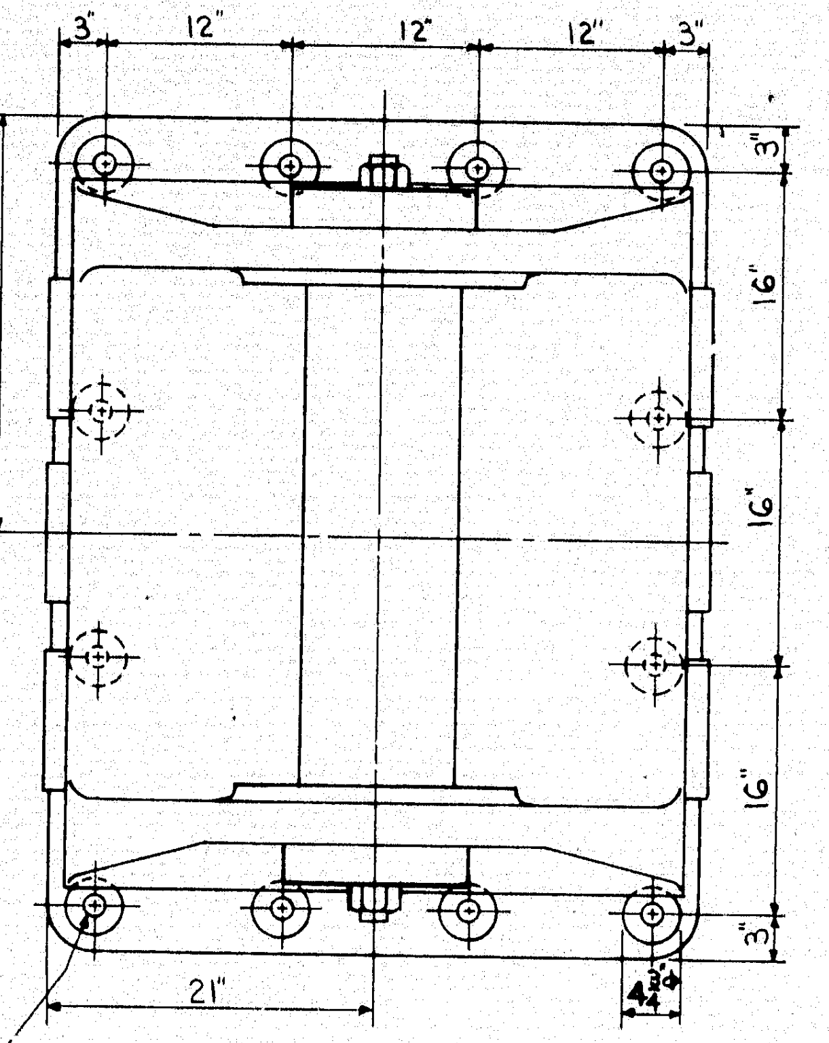

3" 12" 12" 12" 3"
27"
3" 16" 16" 16" 3"
21"
4 1/2"
2 1/4" Drill for (12) 2"⌀ Anchor Bolts

MATERIALS LIST

SHOE & PEDESTAL	High Strength Steel Casting ASTM A148, Grade 80-50
SHOE PIN	Alloy Steel Forging ASTM A237, Class A
SHOE PIN KEEPER, TIE ROD & NUT	Carbon Steel Forging ASTM A235, Class E
ROLLER TRACK	High Strength Alloy Steel Plate ASTM A517
ROLLER	Alloy Steel Forging ASTM A291, - Class 5, Quenched & Tempered. Hard chromium plate all over, .005 thick. (see plating note).
ROLLER SHAFT	Stainless Steel ASTM A276, Type 303 Se, Annealed, Cold-finished 40,000 psi minimum yield strength.
ROLLER BUSHING	Cast Bronze ASTM B22, Alloy C.
ROLLER NEST FRAME	Cast Bronze ASTM B22, Alloy E.
SET SCREW (for guard)	Stainless Steel -- ASTM A320, Grade B8
SHAFT NUT (Self-locking)	Stainless Steel -- ASTM A194, Grade 8
SHAFT KEY	Cold Fin. Steel -- ASTM A108, Grade 1045
GUARD (Pipe-Anchored)	Brass Bar ---- ASTM B21, Alloy B
PIPE (Seamless or Welded)	Alloy Steel -- ASTM A333, Grade 4
PIPE FITTINGS	Forged Steel --- 6000 psi W.O.G.

PLATING NOTE:

Chromium plating shall conform to ASTM B177-55. Outside surfaces of rollers shall have a maximum roughness of 32 before plating.

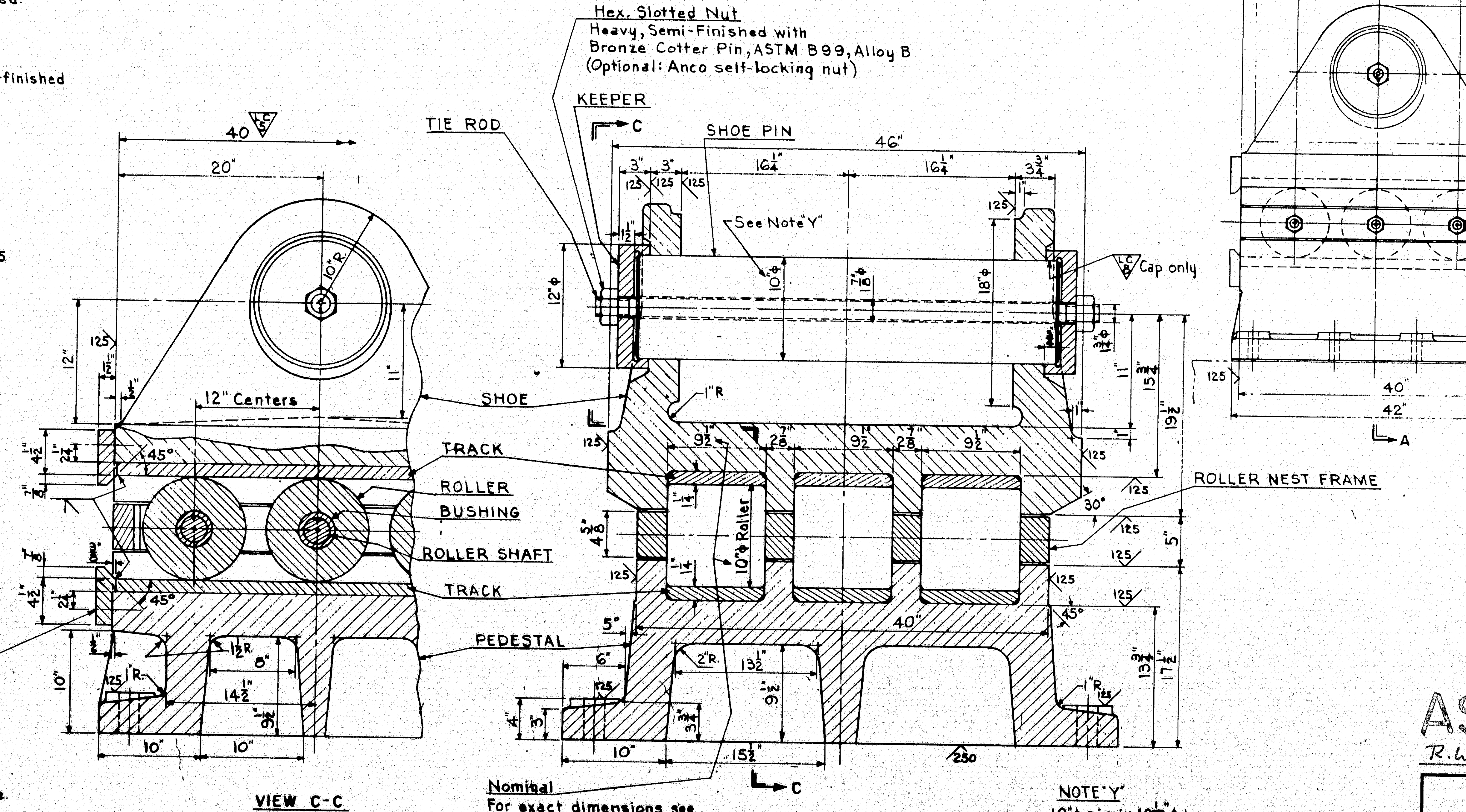

40
20"
10" R
12"
11"
12" Centers
45°
1/2 R
8"
14 3/4
10"
10"
Hex. Slotted Nut Heavy, Semi-Finished with Bronze Cotter Pin, ASTM B99, Alloy B (Optional: Anco self-locking nut)
KEEPER
TIE ROD
C
SHOE PIN
46"
3" 3" 16 1/4" 16 1/4" 3 1/4"
See Note "Y"
12"⌀
10"⌀
18"⌀
Cap only
SHOE
1" R
TRACK
ROLLER
BUSHING
ROLLER SHAFT
TRACK
PEDESTAL
9 1/2 2 3/4 9 1/2 2 3/4 9 1/2
10"⌀ Roller
40"
30°
ROLLER NEST FRAME
5"
13 1/2
15 1/2
10"
2" R
C
230

3/4" Drill, C'bore 3/4" deep for counter bore screw, external wrenching type. 5/8"-10NC, 1 1/2" lg. Ferry Cap Countr-Bor Screw or equal. (2) Screws required per flange.

VIEW C-C
Scale: 1 1/2" = 1'-0"

Nominal
For exact dimensions see enlarged detail of roller nest.

SECTION A-A
Scale: 1 1/2" = 1'-0"

NOTE "Y"
10"⌀ pin in 10 1/32"⌀ bore.
63 Finish for pin and bore

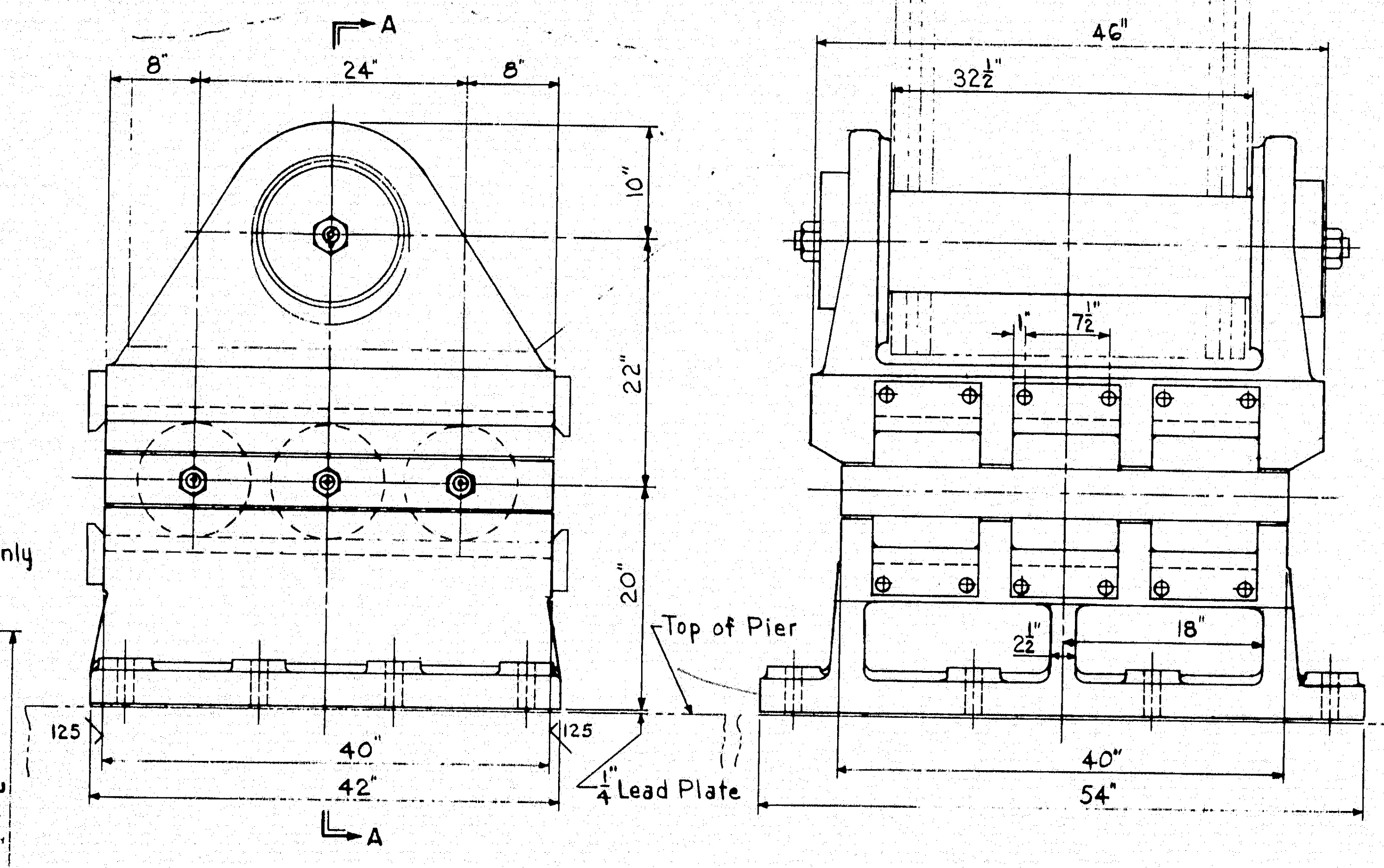

A
8" 24" 8"
10"
22"
20"
40"
42"
A
1/4" Lead Plate
Top of Pier
46"
32 1/2"
7 1/2"
18"
40"
54"

EXPANSION SHOE ASSEMBLY
4 ASSEMBLIES REQ'D.
Scale: 1" = 1'-0"

AS BUILT
R.W. Christie 2/5/73

HARDESTY & HANOVER
CONSULTING ENGINEERS
NEW YORK, N.Y.

5

DESIGN - M.D.
TRACE - Patrick J. Camp
CHECK -
BRIDGE NO.
IN CHARGE OF - Richard W. Christie

NEW HAMPSHIRE
DEPARTMENT OF PUBLIC WORKS AND HIGHWAYS
AND
MAINE STATE HIGHWAY COMMISSION
INTERSTATE 95 BRIDGE
OVER
PISCATAQUA RIVER
BETWEEN
PORTSMOUTH, NEW HAMPSHIRE AND KITTERY, MAINE

ANCHOR PIER EXPANSION SHOES I

SHEET 44 OF 54

129-139

B.P.R. REG. NO.	STATE	PROJECT NUMBER	SHEET NO.	TOTAL SHEETS
1	MAINE	I-95-1(22)16	45	54

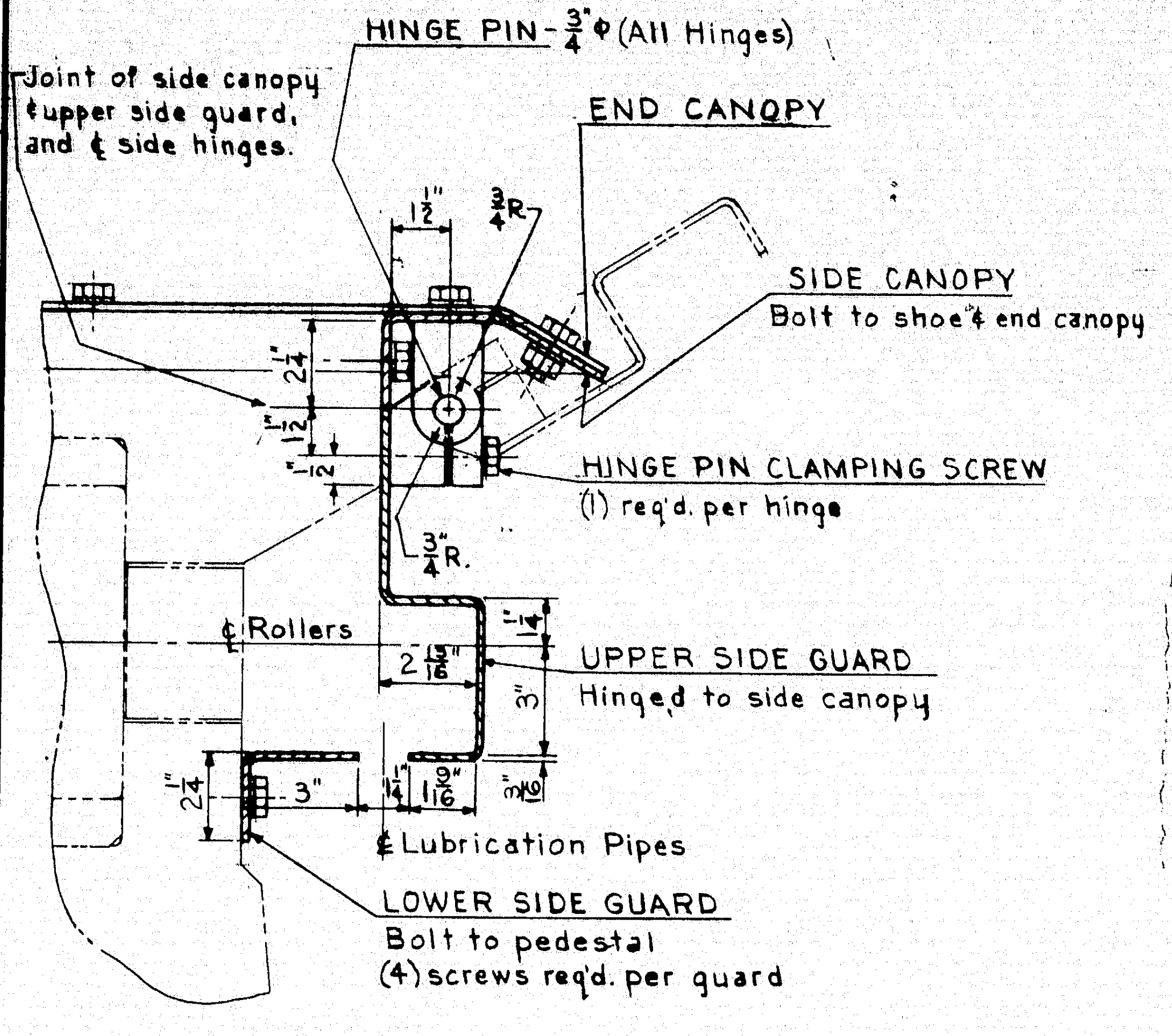

Joint of side canopy ¢ upper side guard, and ¢ side hinges.
HINGE PIN-3/4"⌀ (All Hinges)
END CANOPY
SIDE CANOPY
Bolt to shoe ¢ end canopy
HINGE PIN CLAMPING SCREW
(1) req'd. per hinge
¢ Rollers
UPPER SIDE GUARD
Hinged to side canopy
¢ Lubrication Pipes
LOWER SIDE GUARD
Bolt to pedestal
(4) screws req'd. per guard
1 1/2"
2 1/4"
3"

SECTION E-E
Scale: 3"=1'-0"

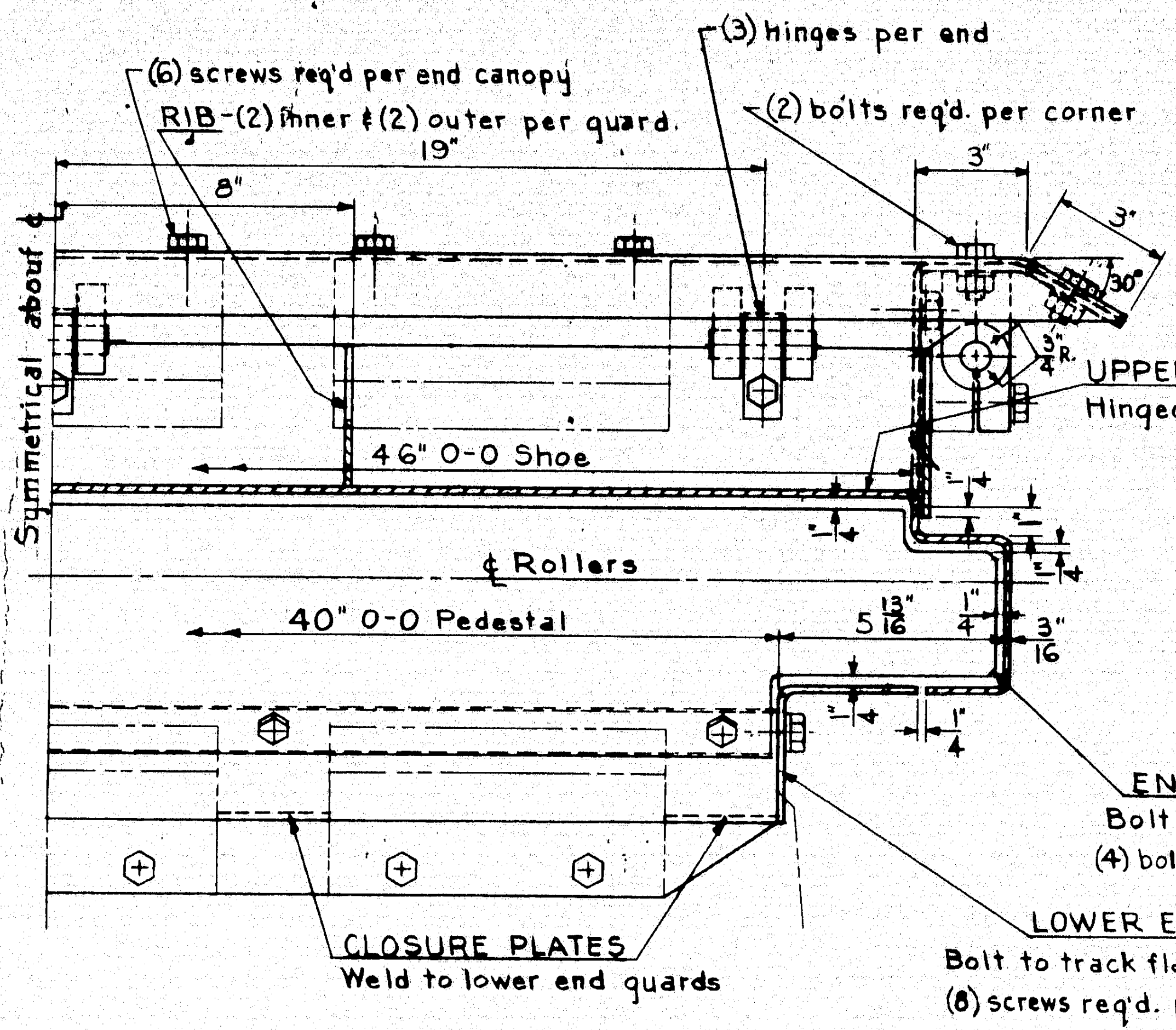

(6) screws req'd per end canopy
RIB-(2) inner ¢ (2) outer per guard.
(3) hinges per end
(2) bolts req'd. per corner
8"
19"
3"
Symmetrical about ¢
46" 0-0 Shoe
¢ Rollers
40" 0-0 Pedestal
5 13/16"
CLOSURE PLATES
Weld to lower end guards

SECTION F-F
Scale: 3"=1'-0"

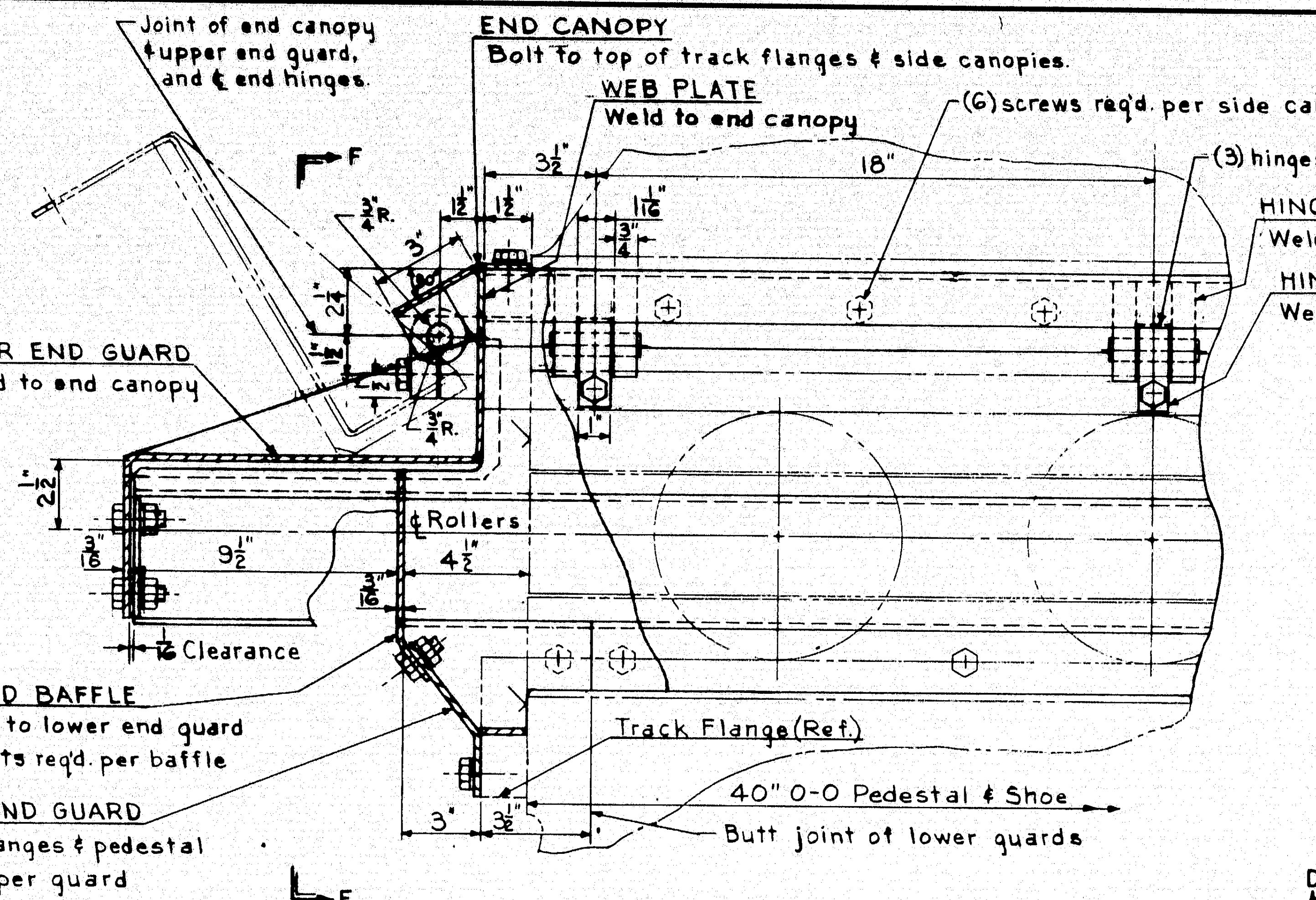

Joint of end canopy ¢ upper end guard, and ¢ end hinges.
END CANOPY
Bolt to top of track flanges ¢ side canopies.
WEB PLATE
Weld to end canopy
(6) screws req'd. per side canopy
(3) hinges per side
HINGE PIN PLATE (2) req'd. per hinge.
Weld to canopies.
HINGE CLAMPING PLATE (1) req'd. per hinge.
Weld to upper guards.
F
3 1/2"
18"
UPPER END GUARD
Hinged to end canopy
¢ Rollers
9 1/2"
4 1/2"
1/2" Clearance
END BAFFLE
Bolt to lower end guard
(4) bolts req'd. per baffle
LOWER END GUARD
Bolt to track flanges ¢ pedestal
(8) screws req'd. per guard
Track Flange (Ref.)
40" 0-0 Pedestal ¢ Shoe
Butt joint of lower guards
3"
F

SECTION D-D
Scale: 3"=1'-0"

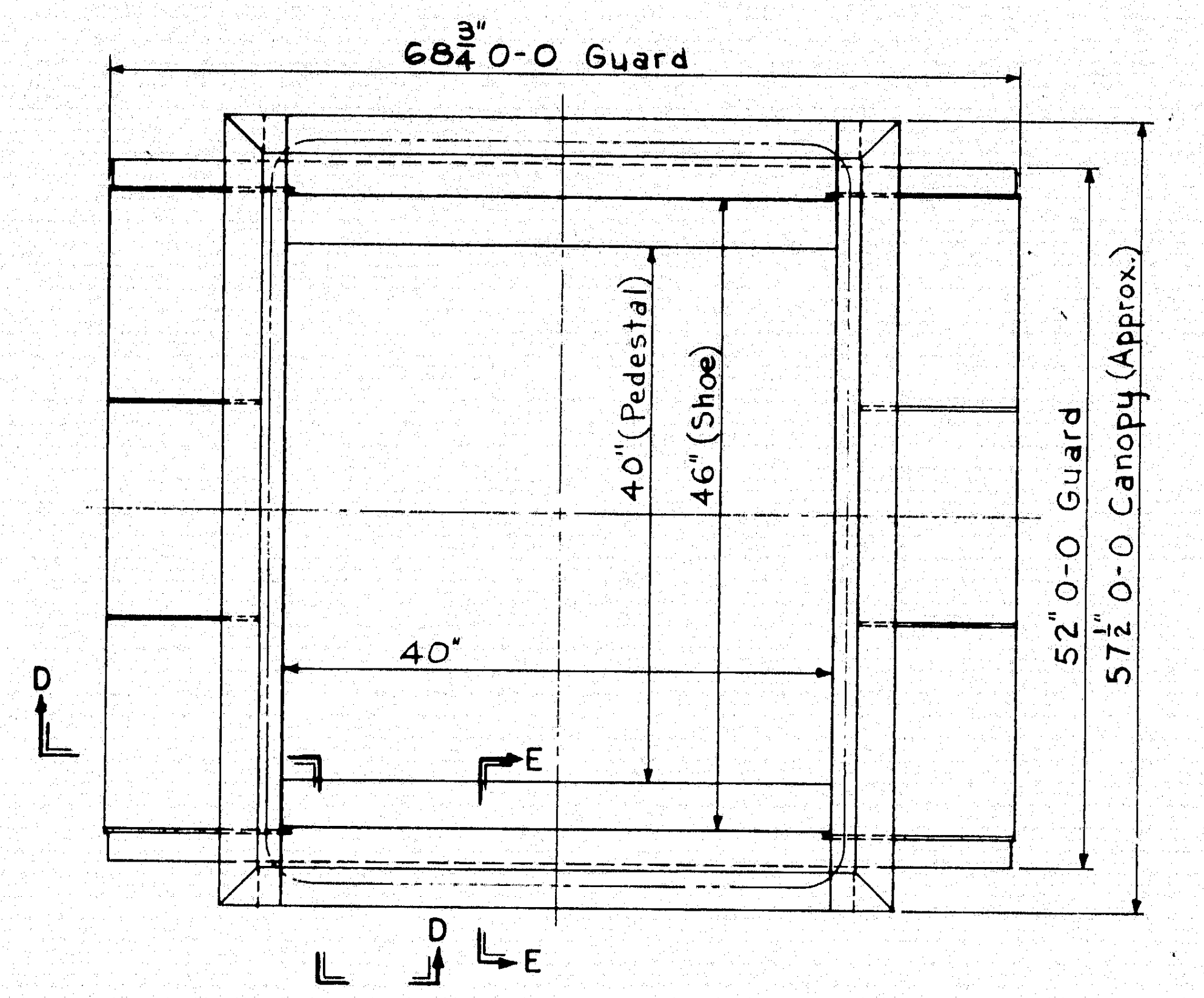

68 3/4" 0-0 Guard
40" (Pedestal)
46" (Shoe)
52" 0-0 Guard
57 1/2" 0-0 Canopy (Approx.)
40"
D
E
D
E

NOTE:
All Guards, Canopies, Closure Plates, Baffles, Ribs and Web Plates made of 3/16" thick plate.
For materials for guards, canopies, closure plates, baffles, ribs, webs, hinge plates, hinge pins, mounting and clamping screws ¢ bolts See Sheet 42
All mounting, clamping and holding screws ¢ bolts shall be 1/2"-13 N.C.

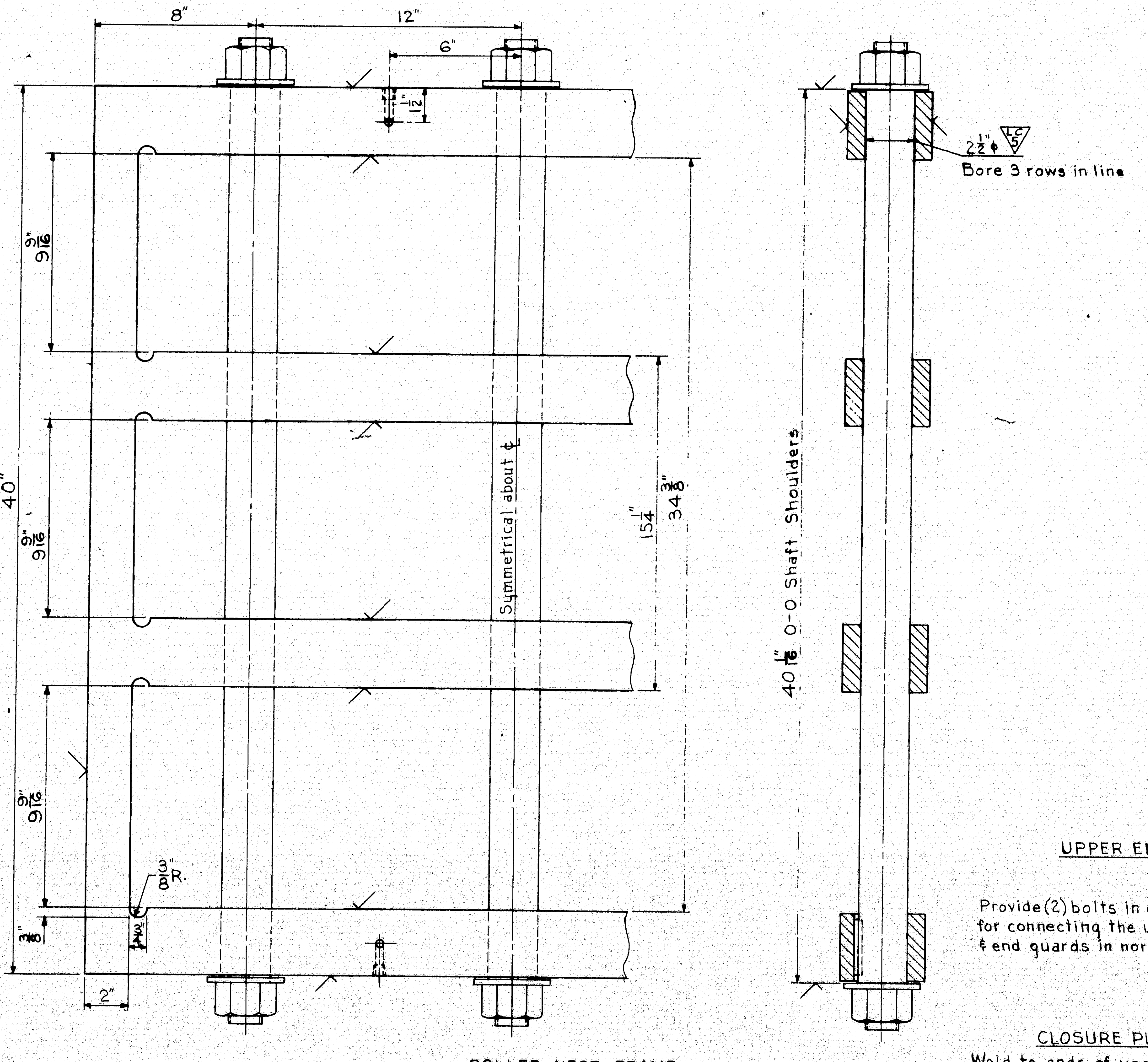

8"
12"
6"
1 1/2"
9 9/16"
9 9/16"
9 9/16"
40"
Symmetrical about ¢
15 1/4"
34 3/4"
3/8" R.
2"
2 1/2"⌀
Bore 3 rows in line
40 1/16" 0-0 Shaft Shoulders

ROLLER NEST FRAME
Scale: 3"=1'-0"
125/ Finish all over
For enlarged detail See Sheet 44

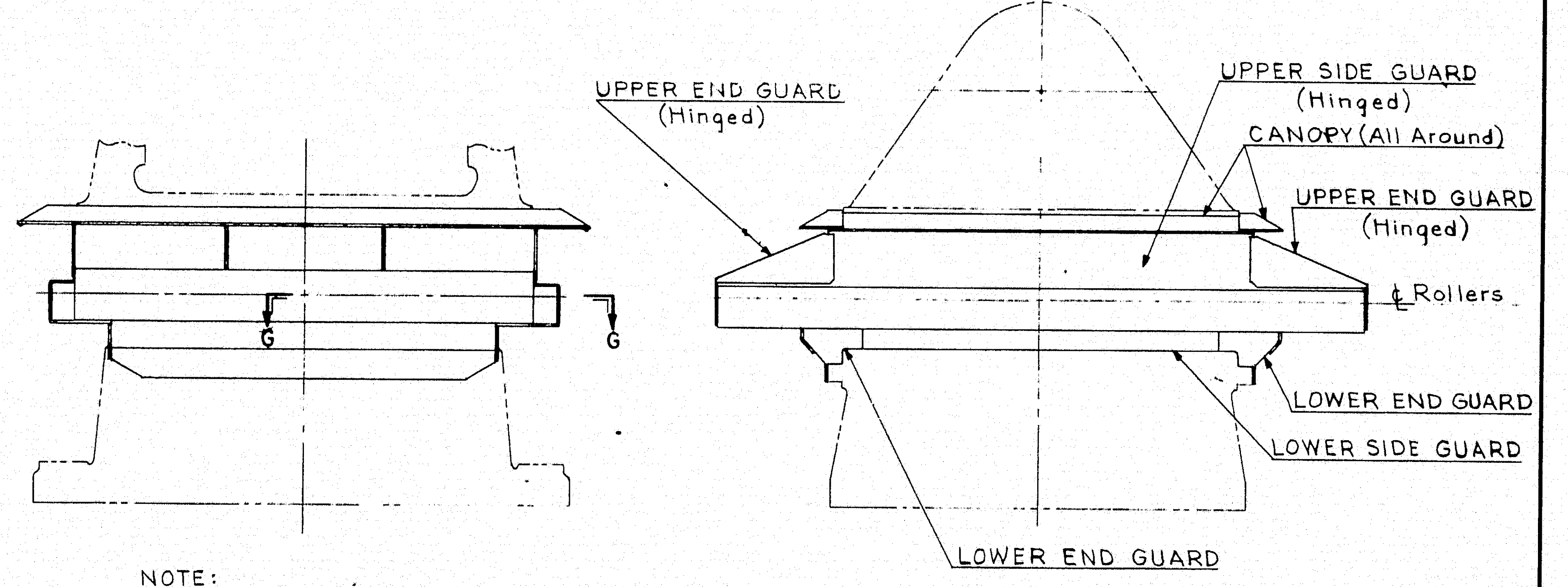

UPPER END GUARD
(Hinged)
UPPER SIDE GUARD
(Hinged)
CANOPY (All Around)
UPPER END GUARD
(Hinged)
¢ Rollers
LOWER END GUARD
LOWER SIDE GUARD
LOWER END GUARD
G
G

NOTE:
Provide means of holding hinged guards in open position.
Do not paint guards

EXPANSION SHOE GUARD ASSEMBLY
4 ASSEMBLIES REQ'D.
scale: 1"=1'-0"

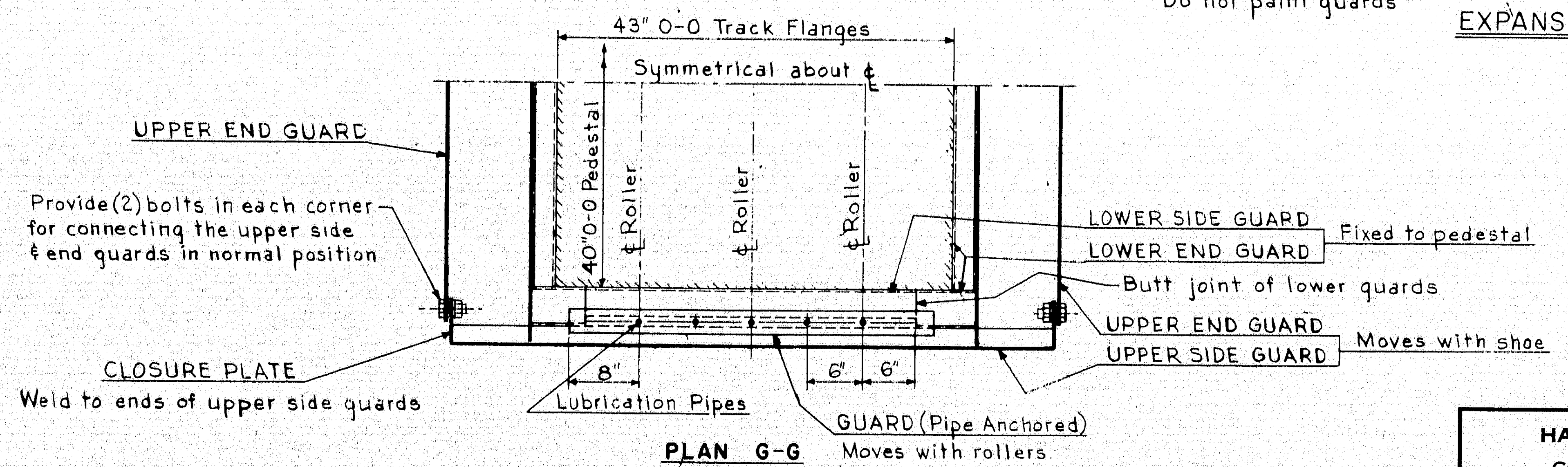

43" 0-0 Track Flanges
Symmetrical about ¢
UPPER END GUARD
Provide (2) bolts in each corner for connecting the upper side ¢ end guards in normal position
40" 0-0 Pedestal
¢ Roller
¢ Roller
¢ Roller
LOWER SIDE GUARD
LOWER END GUARD
Fixed to pedestal
Butt joint of lower guards
UPPER END GUARD
UPPER SIDE GUARD
Moves with shoe
CLOSURE PLATE
Weld to ends of upper side guards
8"
6"
6"
Lubrication Pipes
GUARD (Pipe Anchored)
Moves with rollers

PLAN G-G
Scale: 1"=1'-0"

AS BUILT
R.W. Christie 2/5/73

5

DESIGN — M.D.
TRACE — Patrick J. Casey
CHECK —

BRIDGE NO.
IN CHARGE OF — Richard W. Christie

NEW HAMPSHIRE
DEPARTMENT OF PUBLIC WORKS AND HIGHWAYS
AND
MAINE STATE HIGHWAY COMMISSION
INTERSTATE 95 BRIDGE
OVER
PISCATAQUA RIVER
BETWEEN
PORTSMOUTH, NEW HAMPSHIRE AND KITTERY, MAINE

HARDESTY & HANOVER
CONSULTING ENGINEERS
NEW YORK, N.Y.

ANCHOR PIER EXPANSION SHOES II

SHEET 45 OF 54

129-140

B. P. R. REG. NO.	STATE	PROJECT NUMBER	SHEET NO.	TOTAL SHEETS
1	MAINE	I—95—1(22)16	46	54

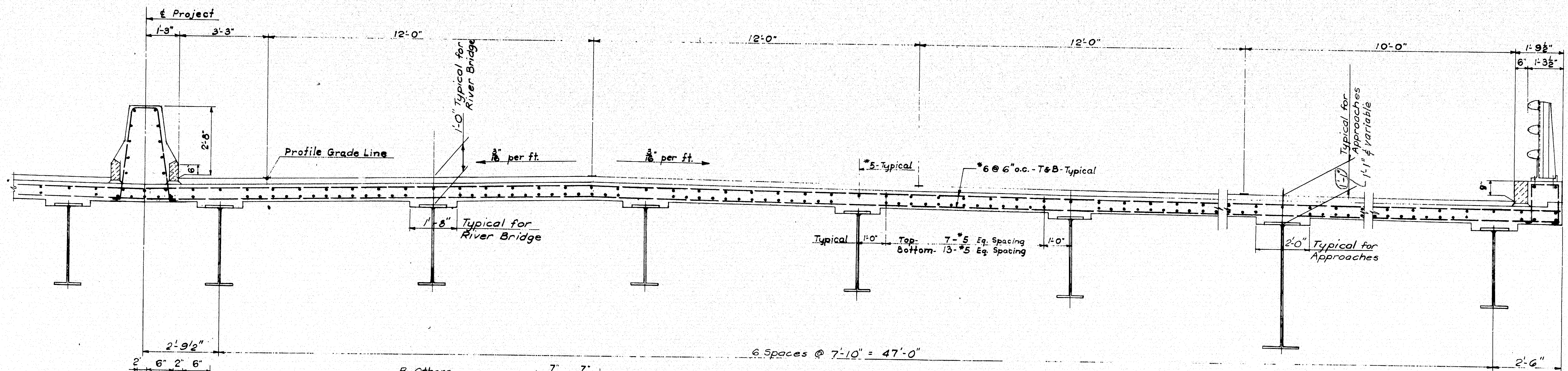

℄ Project
1'-3"
3'-3"
12'-0"
12'-0"
12'-0"
10'-0"
1'-9½"
6"
1'-3½"
2'-8"
6"
Profile Grade Line
1'-0" Typical for River Bridge
3/16" per ft.
3/16" per ft
1'-8" Typical for River Bridge
#5-Typical
#6 @ 6" o.c. - T&B - Typical
Typical
1'-0"
Top- 7-#5 Eq. Spacing
Bottom- 13-#5 Eq. Spacing
1'-0"
Typical for Approaches
1'-1" ± variable
2'-0" Typical for Approaches
9"
2'-9½"
6 Spaces @ 7'-10" = 47'-0"
2'-6"

CROSS SECTION — DECK SLAB

Scale: ½" = 1'-0"

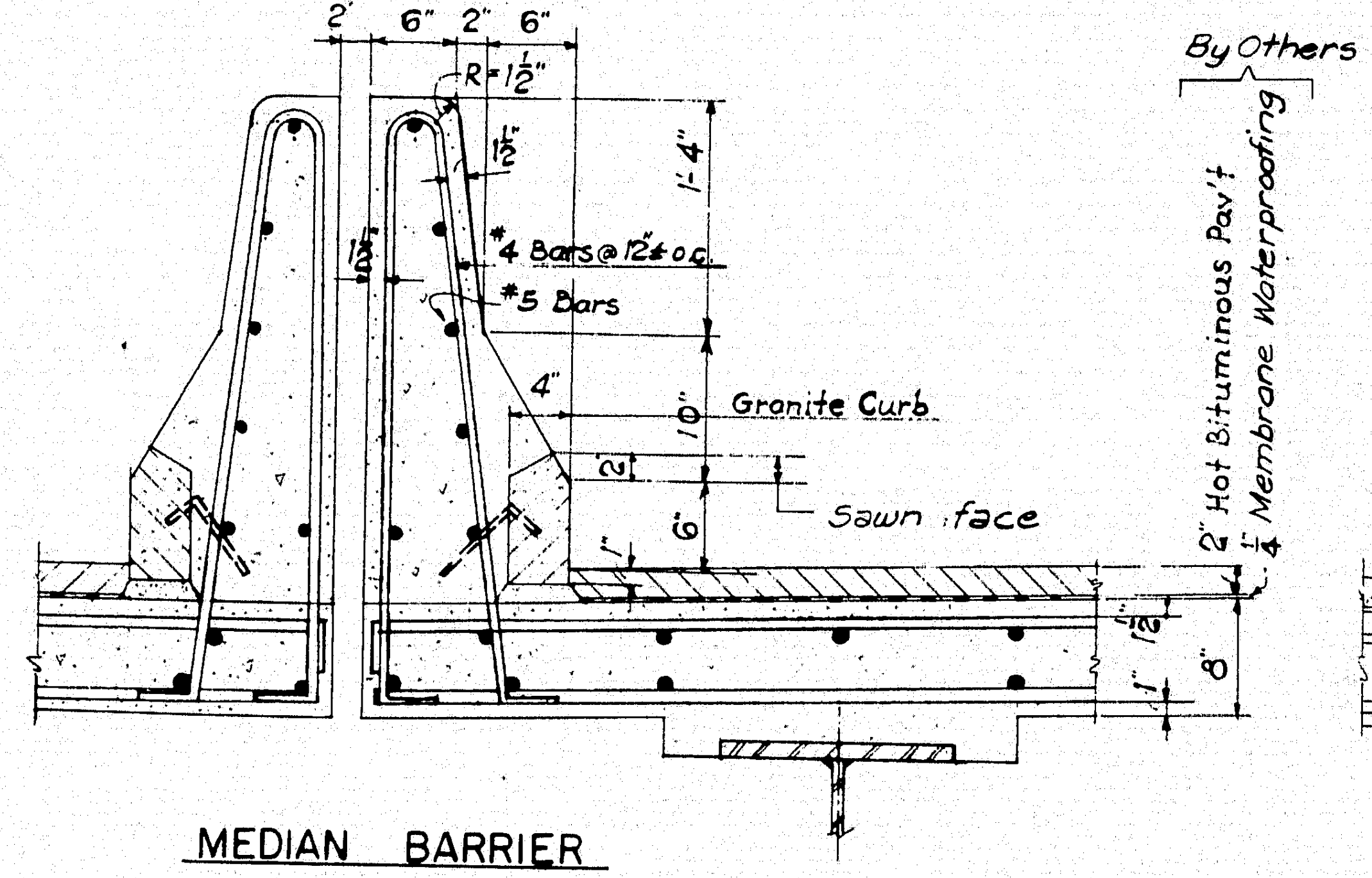

2
6"
2"
6"
R = 1½"
1½"
1'-4"
1½"
#4 Bars @ 12"± o.c.
#5 Bars
4"
10"
Granite Curb
2"
6"
Sawn face
1"
By Others
2" Hot Bituminous Pav't & ¼" Membrane Waterproofing
1½"
8"
1"

MEDIAN BARRIER
APPROACH SPANS

Scale: 1" = 1'-0"

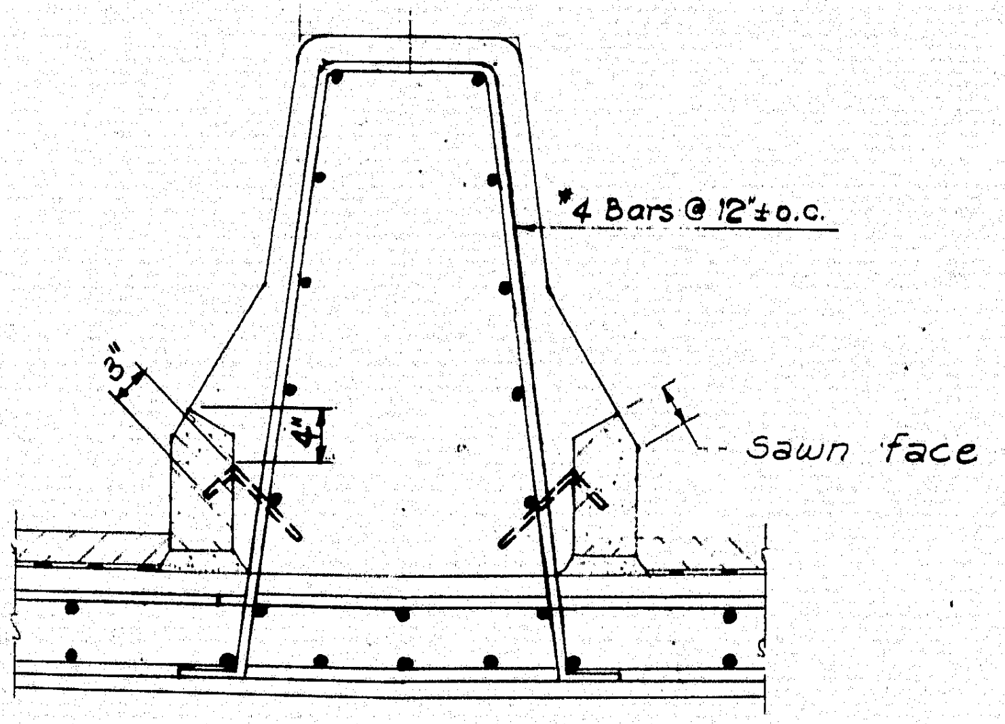

7"
7"
#4 Bars @ 12"± o.c.
3"
4"
Sawn face

MEDIAN BARRIER
TRUSS SPANS

Scale: 1" = 1'-0"

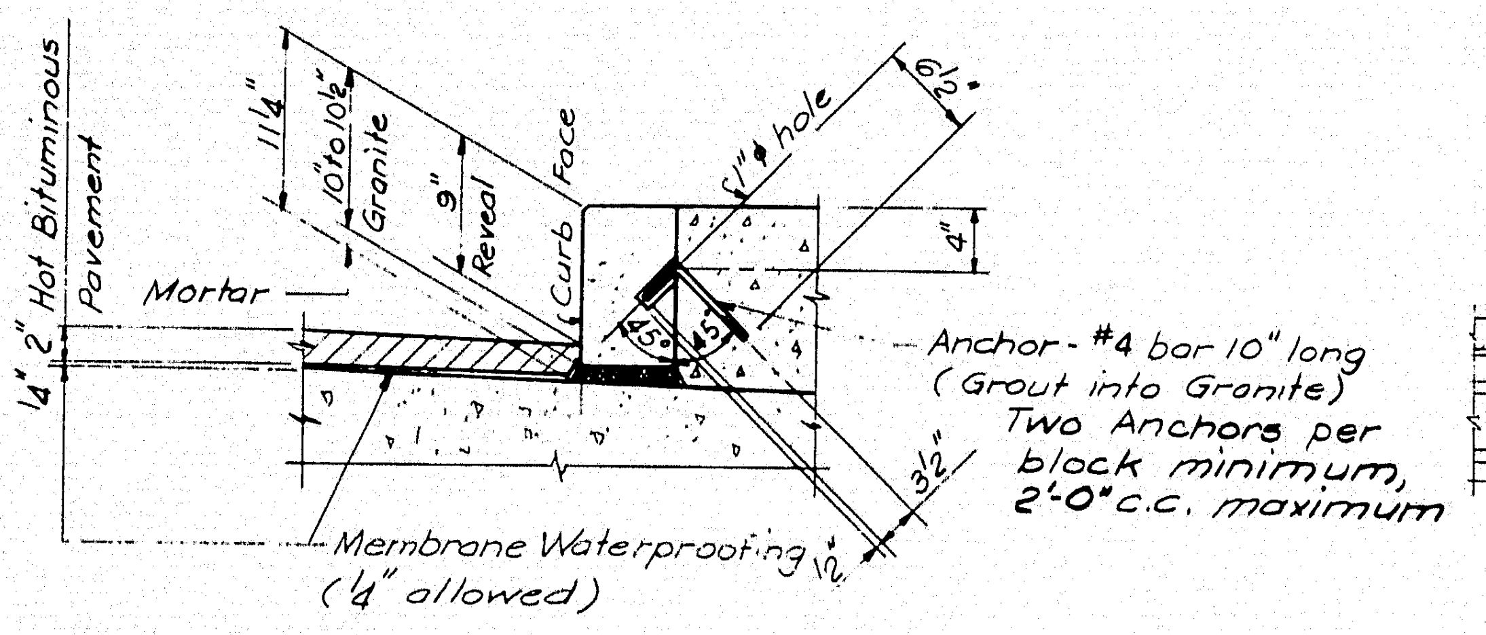

1¼" 2" Hot Bituminous Pavement
11¼"
10" to 10½" Granite
9" Reveal
Curb Face
Mortar
1" ϕ hole
6½"
4"
45°
45°
3½"
½"
Membrane Waterproofing (¼" allowed)

Anchor - #4 bar 10" long (Grout into Granite)
Two Anchors per block minimum, 2'-0" c.c. maximum

GRANITE CURB

Scale: 1" = 1'-0"

For detail at contraction joints see Railing Details

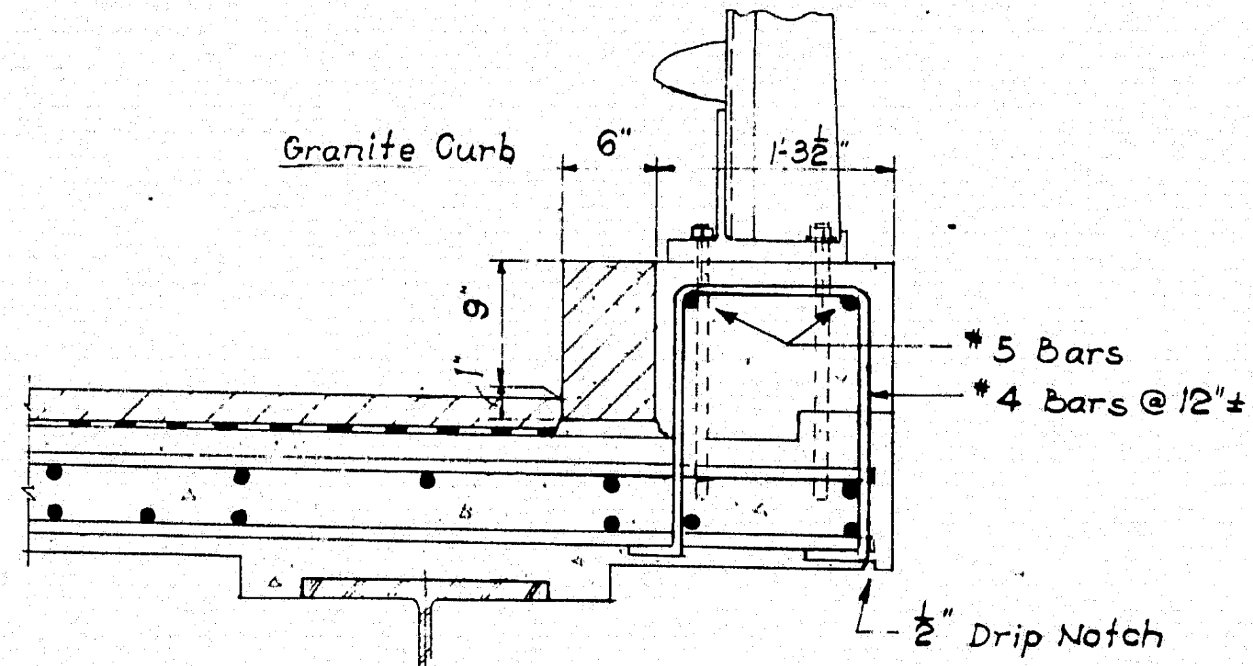

Granite Curb
6"
1'-3½"
9"
1"
#5 Bars
#4 Bars @ 12"± o.c.
½" Drip Notch

SIDEWALK

Scale: 1" = 1'-0"

AS BUILT
R.W. Christie 2/5/73

5

DESIGN — W.W.C.
TRACE — R.S.
CHECK — S. [illegible]

BRIDGE NO.
IN CHARGE OF — Richard W. Christie

NEW HAMPSHIRE
DEPARTMENT OF PUBLIC WORKS AND HIGHWAYS
AND
MAINE STATE HIGHWAY COMMISSION
INTERSTATE 95 BRIDGE
OVER
PISCATAQUA RIVER
BETWEEN
PORTSMOUTH, NEW HAMPSHIRE AND KITTERY, MAINE
APPROACH SPANS

STEEL & CONCRETE DETAILS

SHEET 46 OF 54

HARDESTY & HANOVER
CONSULTING ENGINEERS
NEW YORK, N. Y.

129-141

B. P. R. REG. NO.	STATE	PROJECT NUMBER	SHEET NO.	TOTAL SHEETS
1	MAINE	I-95-1(22)16	47	54

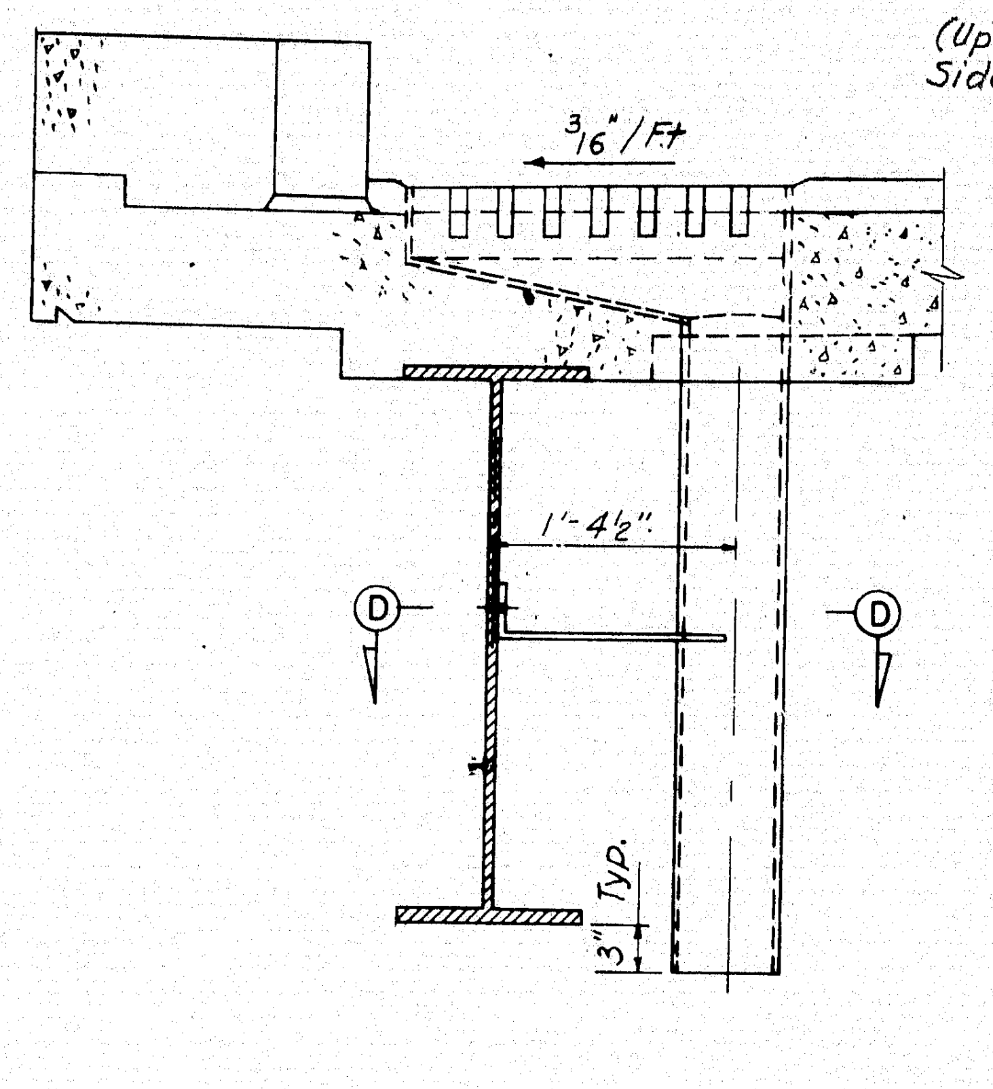
3/16"/Ft
1'-4½"
D
D
Typ.
3"

TYPICAL SECTION
Scale: 1"=1'-0"

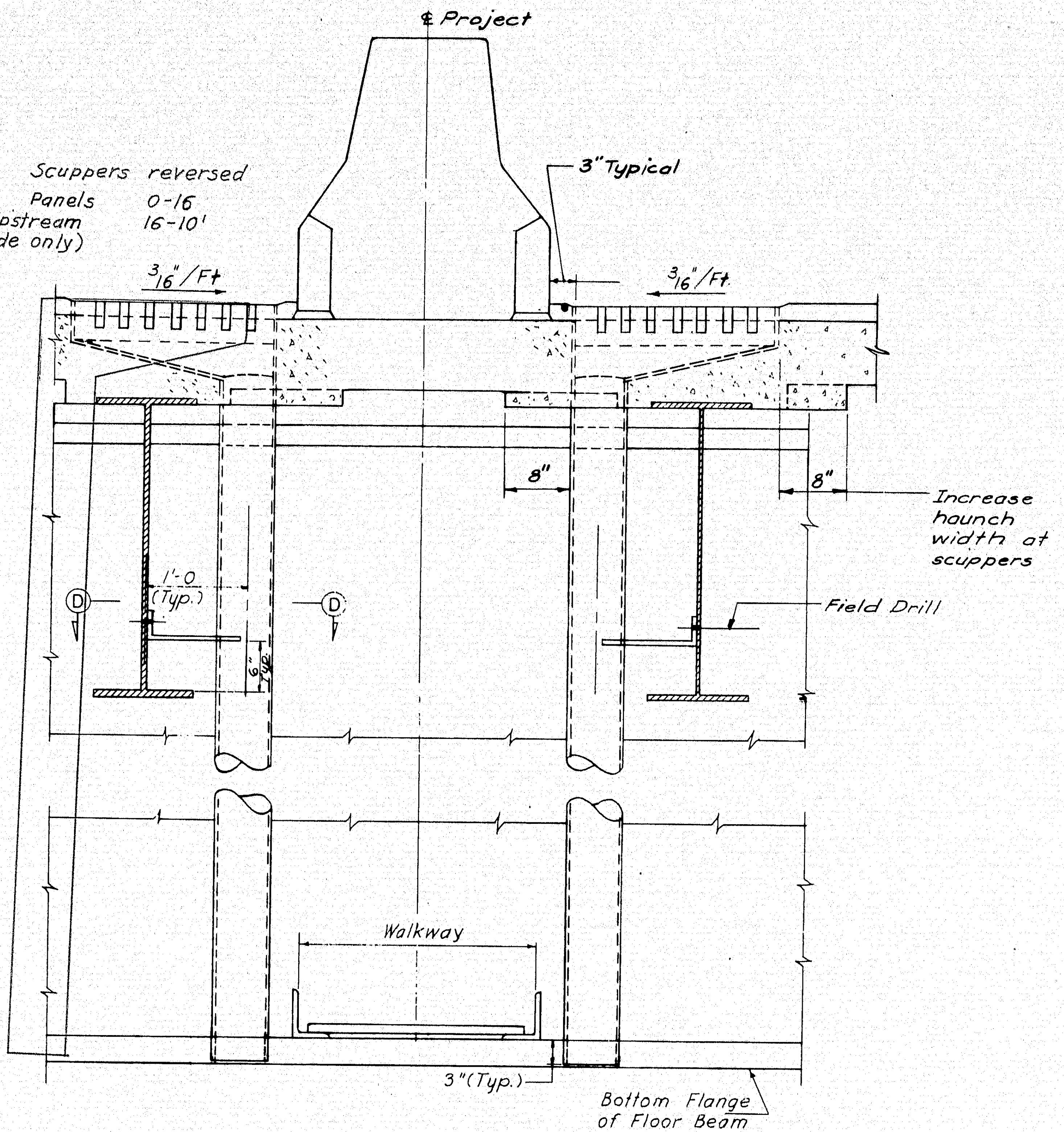
℄ Project
Scuppers reversed
Panels 0-16
16-10'
(Upstream Side only)
3" Typical
3/16"/Ft
3/16"/Ft
8"
8"
Increase haunch width at scuppers
Field Drill
1'-0 (Typ.)
D
D
6
Walkway
3"(Typ.)
Bottom Flange of Floor Beam

TYPICAL SECTION
Scale: 1"=1'-0"
See Sheet 5 for Horizontal Location

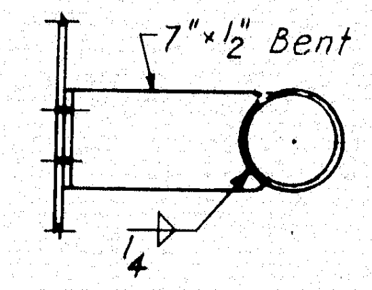

SECTION D-D
Scale: 1"=1'-0"

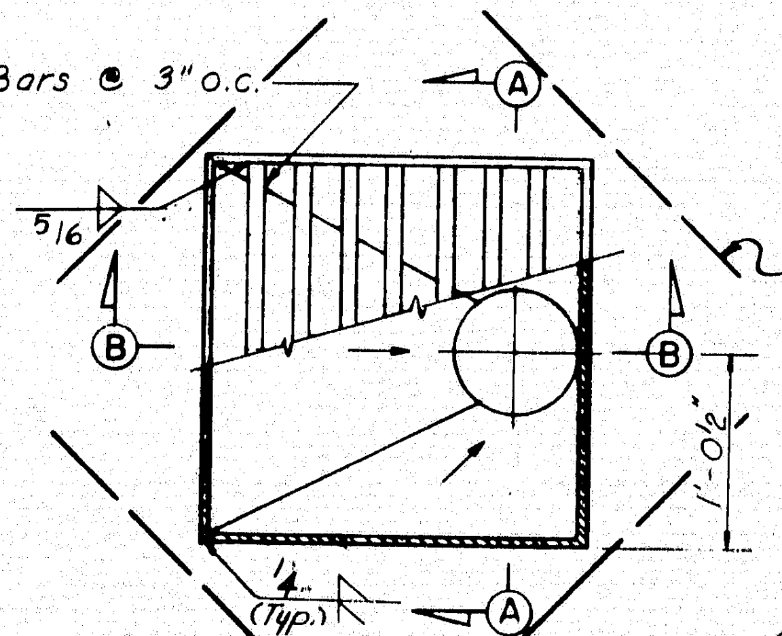
1"x3" Bars @ 3" o.c.
A
A
B
B
5/16
1'-0½"
¼ (Typ.)

Corner reinforcing

Note: Cut longitudinal & transverse reinforcing to clear scuppers, & use them as corner reinforcing.

Scuppers : A 242
Pipe : Yoloy

SCUPPER DETAIL
Galv. W.I.
Scale: 1"=1'-0"

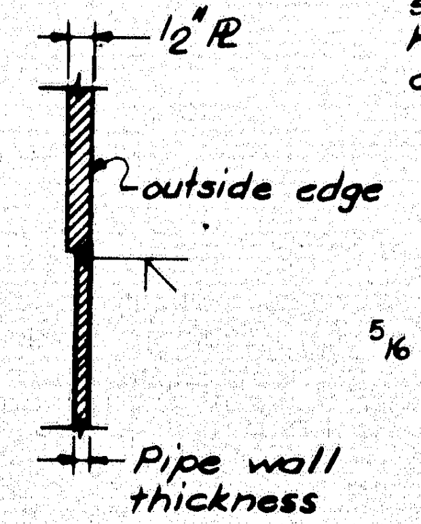
½" ℔
outside edge
Pipe wall thickness

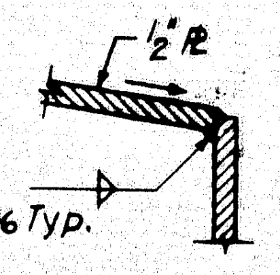

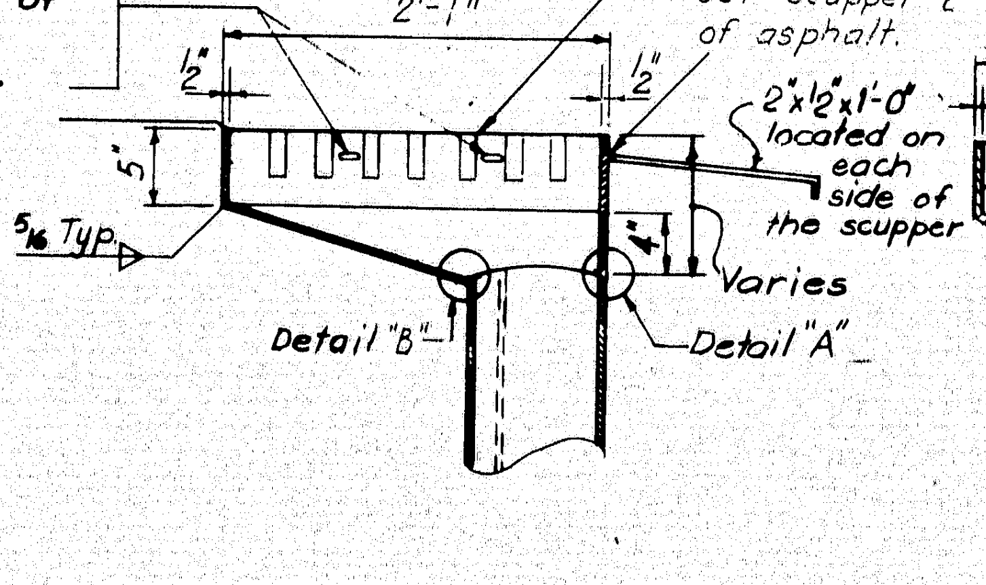
2-⅜"×1" holes each @ 9" on each side of the scupper. Bottom of hole 3/16" above concrete deck.
¼
Slope to suit deck geometry Set scupper ½" below level of asphalt.
2'-1"
½"
½"
5"
5/16 Typ
2"x½"x1'-0" located on each side of the scupper
4"
Varies
Detail "B"
Detail "A"

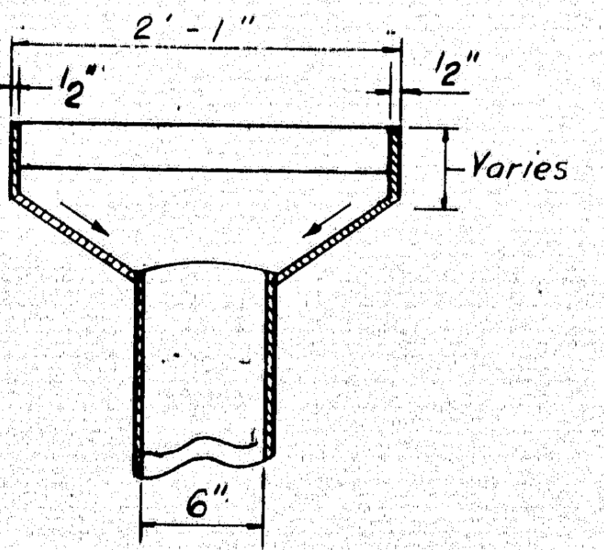
2'-1"
½"
½"
Varies
6"

DETAIL "A"
Scale: 3"=1'-0"

DETAIL "B"
Scale: 3"=1'-0"

SECTION B-B
Scale: 1"=1'-0"

Note: S6 used for 6"ϕ W.I. Pipe

SECTION A-A
Scale: 1"=1'-0"

Threaded Galvanized Cast Iron Drainage Fittings shall conform to ASA B16.12.

AS BUILT
R.W. Christie 2/5/73

5

DESIGN – A. M. G.
TRACE – Karlis P. Zils
CHECK – S. Mishima

BRIDGE NO.
IN CHARGE OF – Richard W. Christie

NEW HAMPSHIRE
DEPARTMENT OF PUBLIC WORKS AND HIGHWAYS
AND
MAINE STATE HIGHWAY COMMISSION
INTERSTATE 95 BRIDGE
OVER
PISCATAQUA RIVER
BETWEEN
PORTSMOUTH, NEW HAMPSHIRE AND KITTERY, MAINE

SCUPPERS

HARDESTY & HANOVER
CONSULTING ENGINEERS
NEW YORK, N. Y.

SHEET 47 OF 54

129-142

B. P. R. REG. NO.	STATE	PROJECT NUMBER	SHEET NO.	TOTAL SHEETS
1	MAINE	I—95—1(22)16	48	54

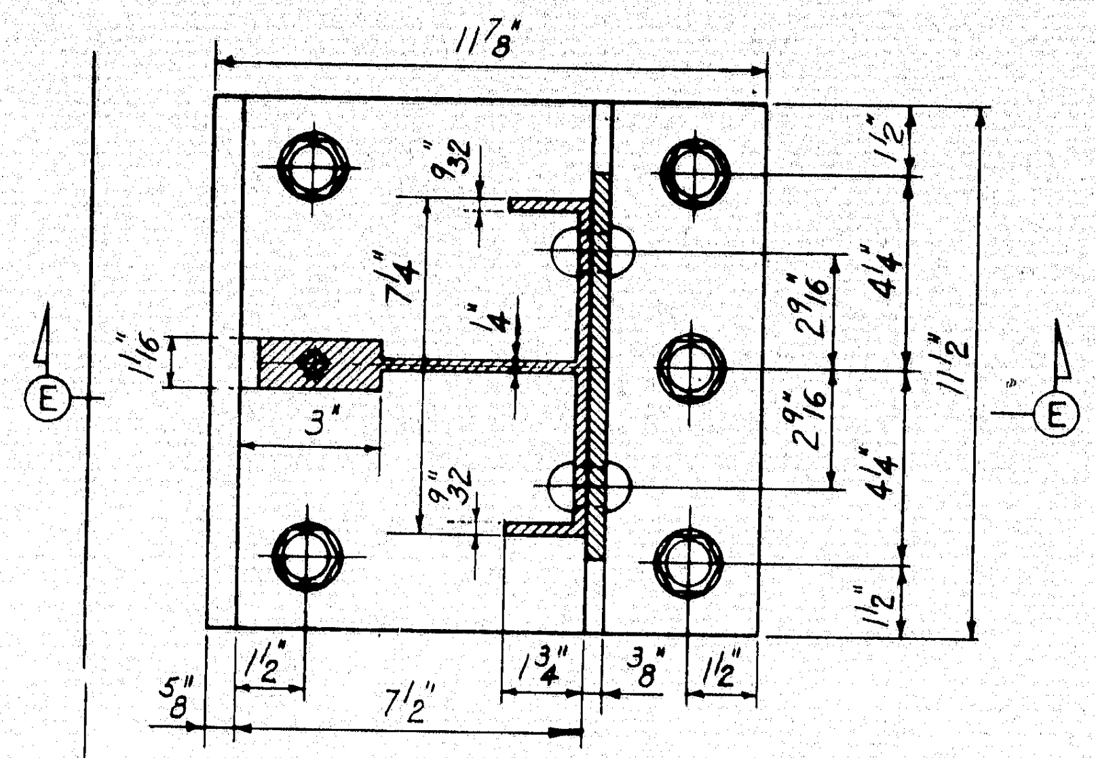

11 7/8"
1 1/16"
3"
7 1/4"
9/32"
1/4"
2 9/16"
4 1/4"
11 1/2"
1 1/2"
5/8"
7 1/2"
1 3/4"
3/8"
E

SECTION A-A
Scale: 3" = 1'-0"

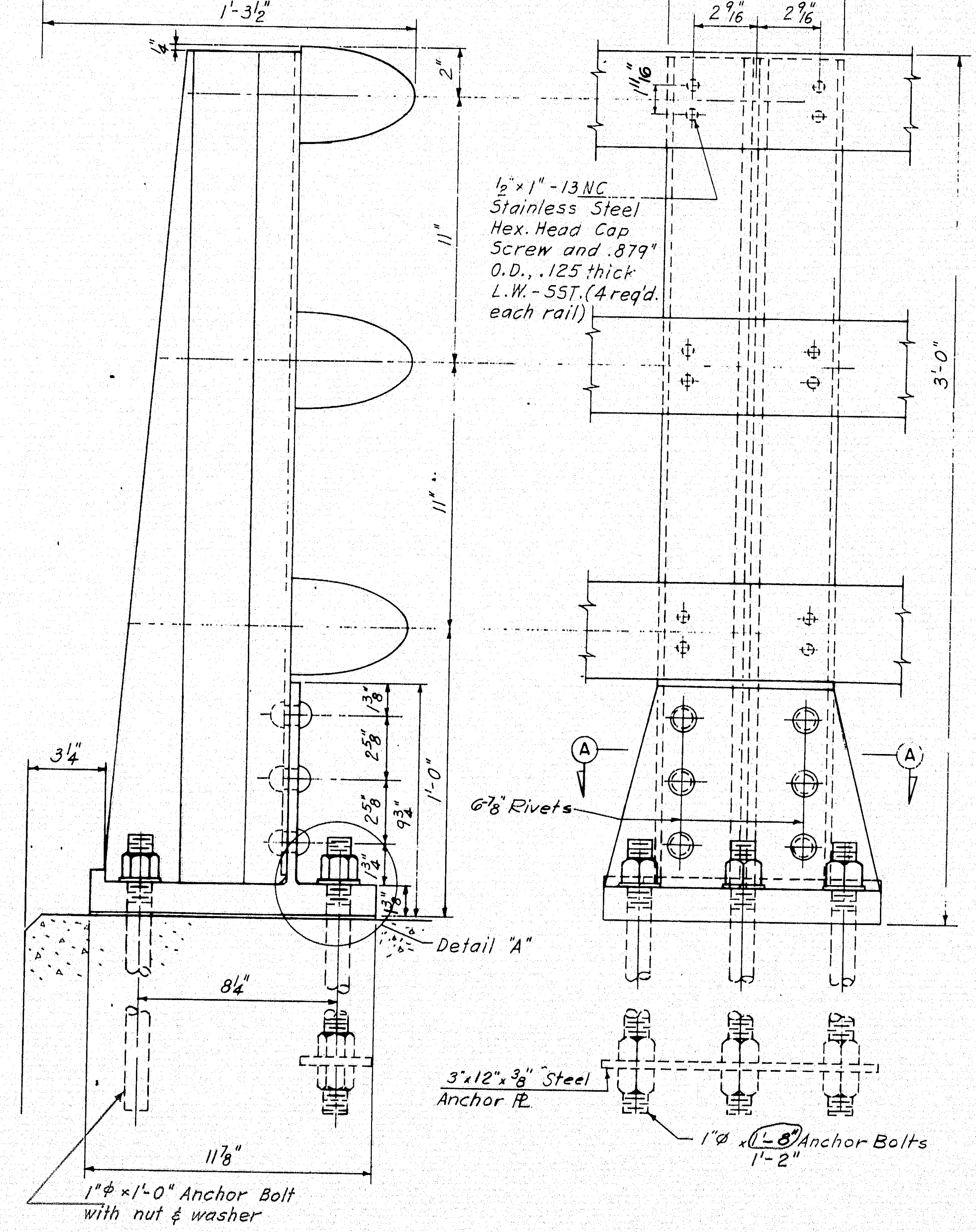

1'-3 1/2"
7 1/4"
2 9/16"
1/2" × 1" - 13 NC Stainless Steel Hex. Head Cap Screw and .879" O.D., .125 thick L.W. - SST. (4 req'd. each rail)
11"
3'-0"
1'-0"
3 1/4"
9 3/4"
6 7/8" Rivets
A
Detail "A"
8 1/4"
11 7/8"
3" × 12" × 3/8" Steel Anchor Pl.
1" Ø × 1'-8" / 1'-2" Anchor Bolts
1" Ø × 1'-0" Anchor Bolt with nut & washer

ALUMINUM BRIDGE RAILING - 3 RAIL
Scale: 3" = 1'-0"

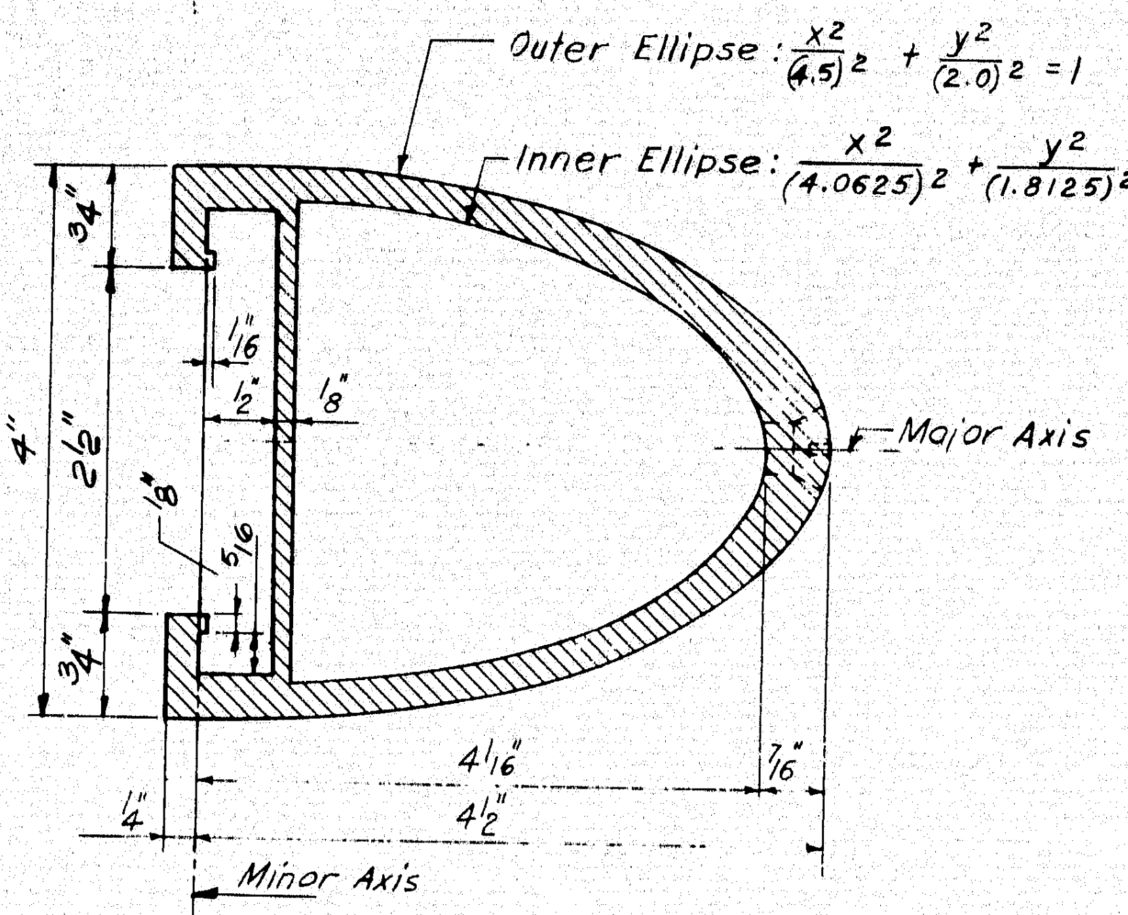

Outer Ellipse: $\frac{x^2}{(4.5)^2} + \frac{y^2}{(2.0)^2} = 1$
Inner Ellipse: $\frac{x^2}{(4.0625)^2} + \frac{y^2}{(1.8125)^2} = 1$
Major Axis
Minor Axis
4"
2 1/2"
3/4"
4 1/16"
4 1/2"
7/16"
1/4"

RAIL
Scale: 3/4" = 1"

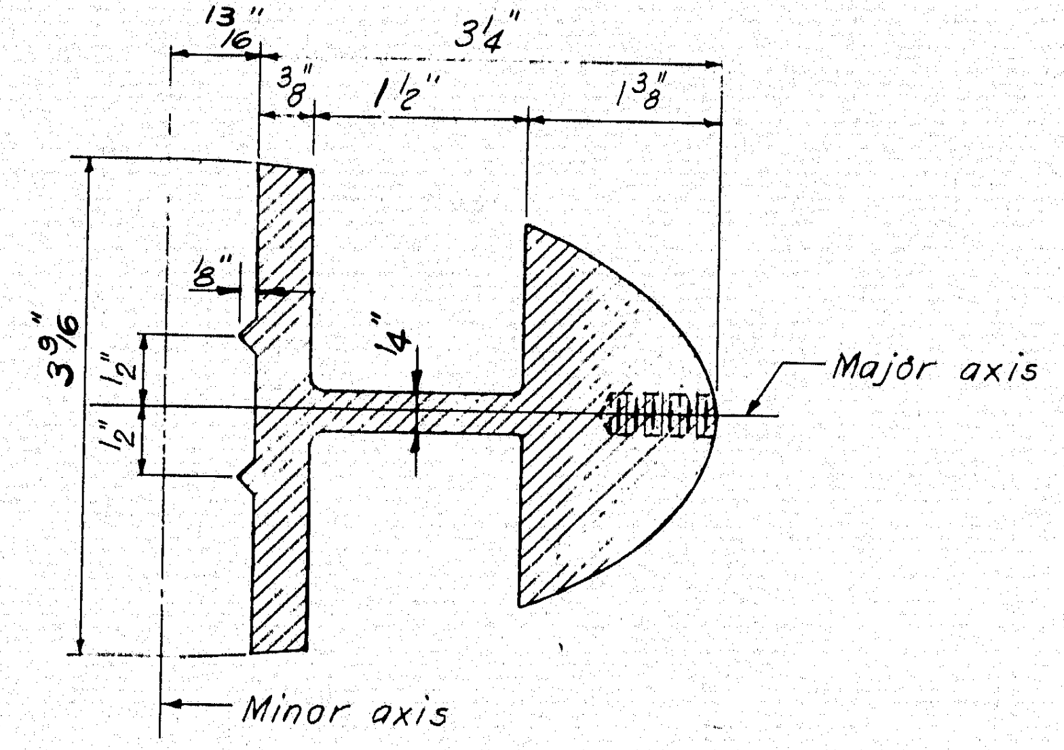

13/16"
3 1/4"
3/8"
1 1/2"
1 3/8"
3 9/16"
Major axis
Minor axis

RAIL SPLICE
Scale: 3/4" = 1"

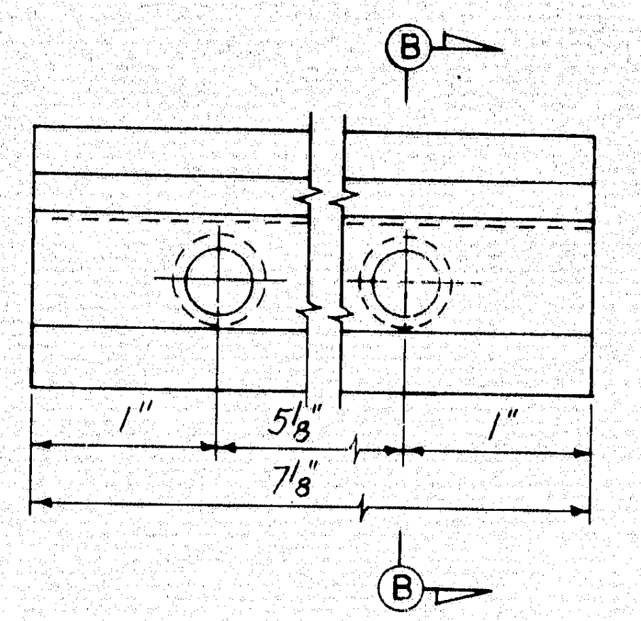

RAIL CLAMP BAR DETAIL
Scale: Full Size

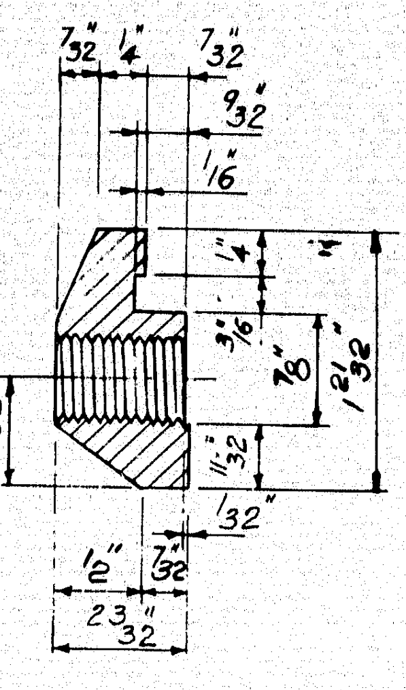

7/32"
1/4"
9/32"
1/16"
23/32"

SECTION B-B
Scale: Full Size

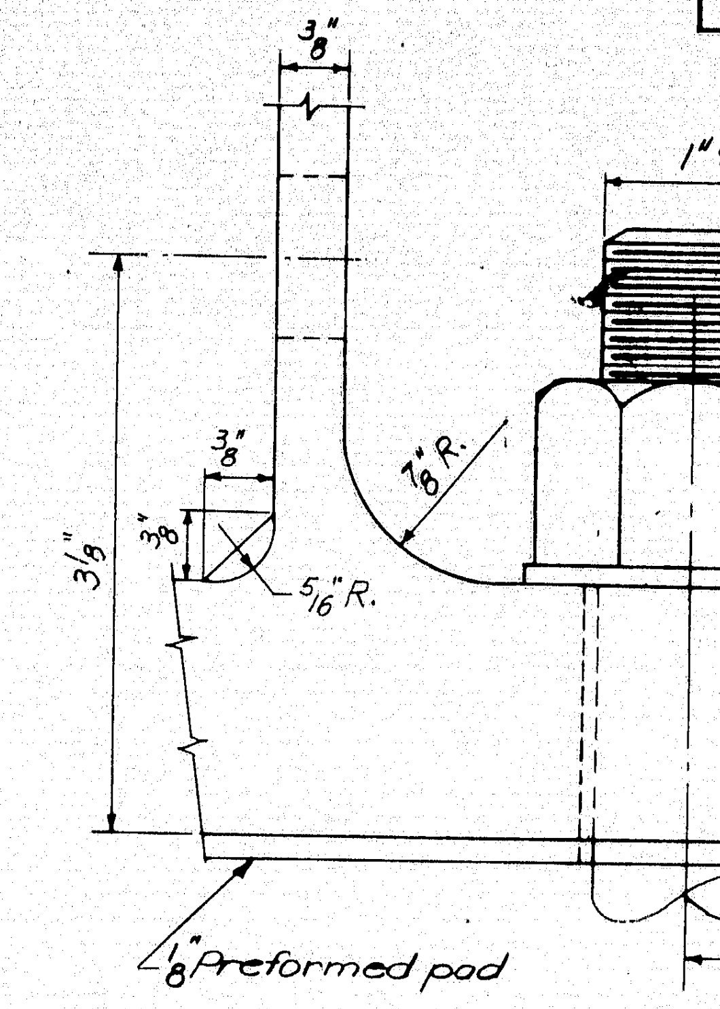

3/8"
1" Ø
7/8" R.
5/16" R.
3 1/8"
3 1/2"
1 3/8"
1 1/2"
1/8" Preformed pad

DETAIL "A"
Scale: Full Size

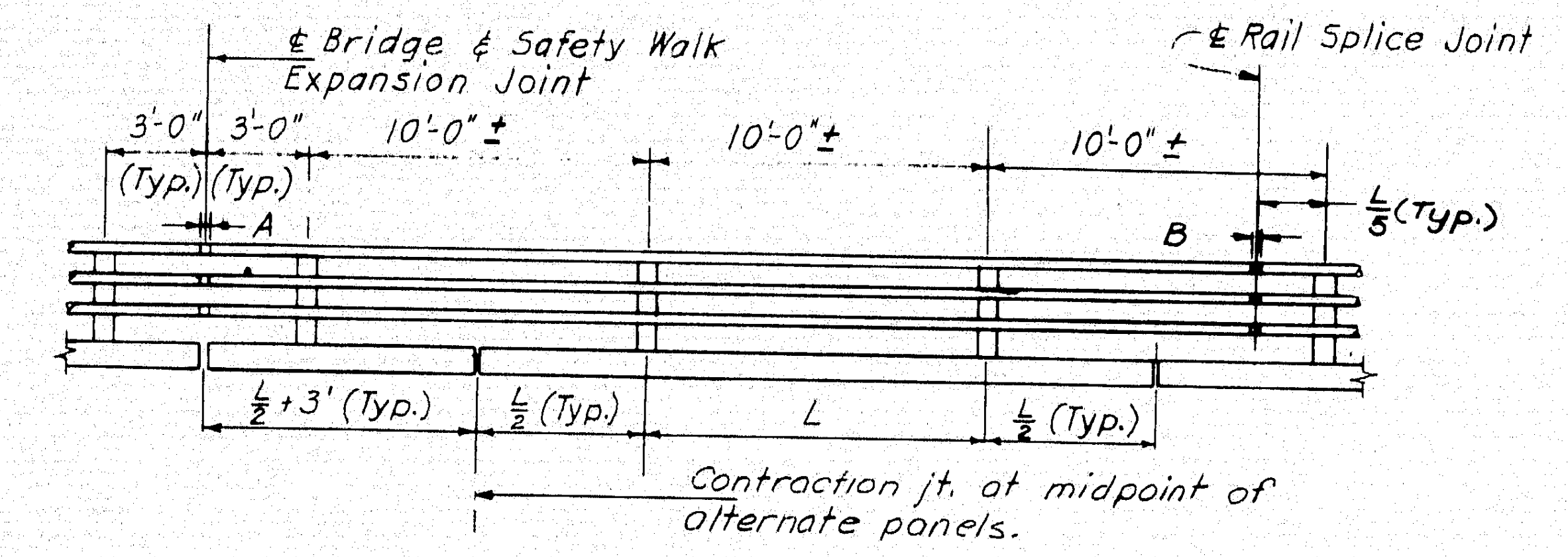

℄ Bridge & Safety Walk Expansion Joint
℄ Rail Splice Joint
3'-0" (Typ.)
10'-0" ±
A
B
L/5 (Typ.)
L/2 + 3' (Typ.)
L/2 (Typ.)
L
Contraction jt. at midpoint of alternate panels.

TYPICAL RAILING ELEVATION
Scale: 3/16" = 1'-0"

SPACING AT 45 °F	A	B
Approach Spans	4"	2"
So. Anchor Pier	10"	—
No. Anchor Pier	10"	—
Truss Panel Points	2"	2"

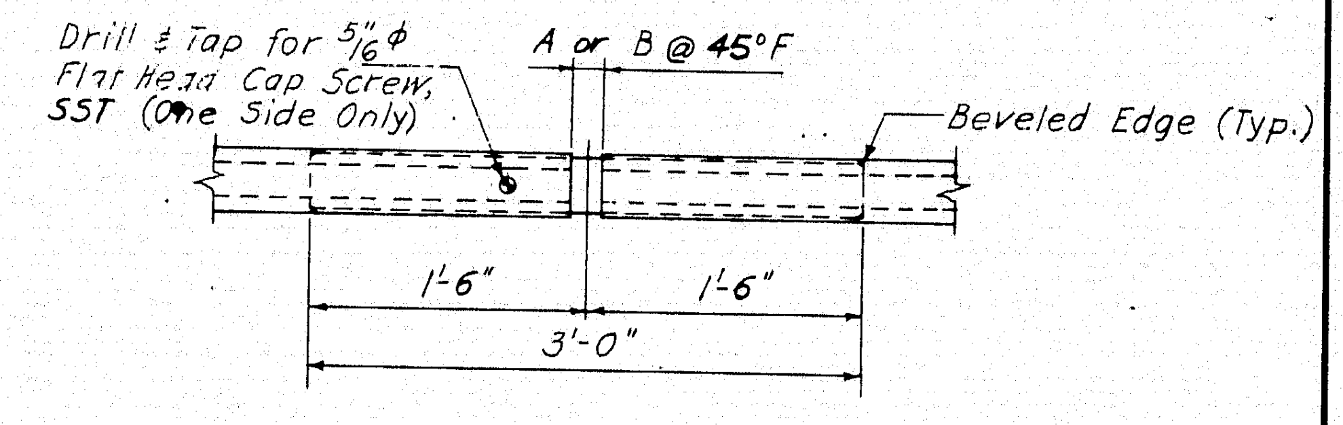

Drill & Tap for 5/16" Ø Flat Head Cap Screw, SST (One Side Only)
A or B @ 45°F
Beveled Edge (Typ.)
1'-6"
3'-0"

JOINT DETAIL
Scale: 1" = 1'-0"

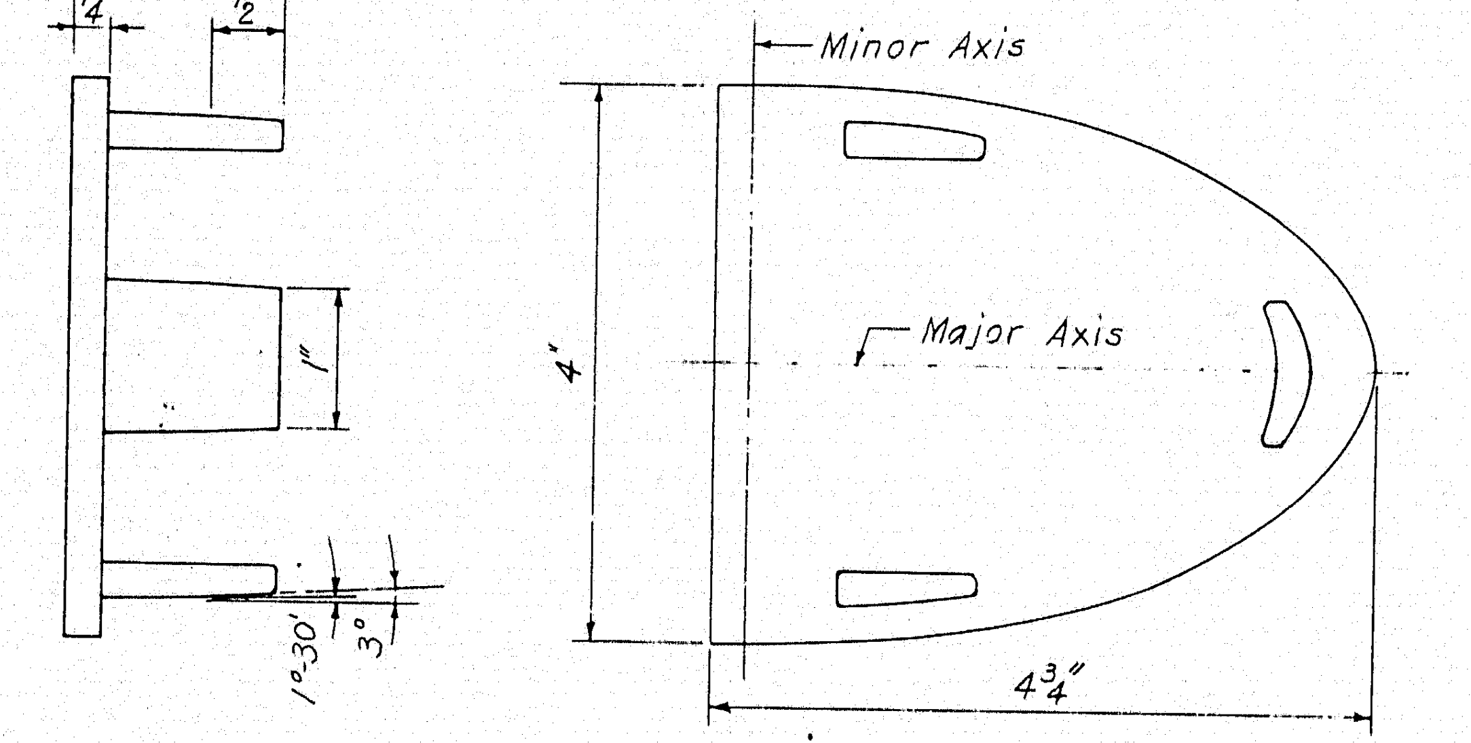

1 1/4"
1/4"
1/2"
Minor Axis
Major Axis
4"
1"
1°30'
4 3/4"

RAIL CAP
Scale: 3/4" = 1"

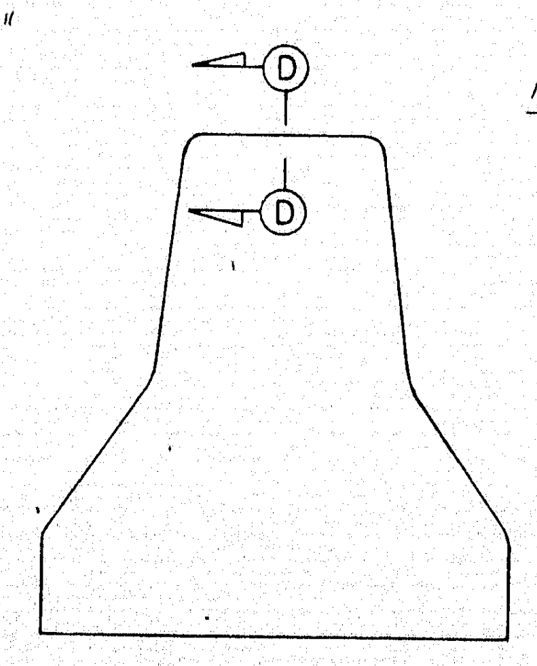

MEDIAN CONTRACTION JOINT DETAIL
Scale: 1" = 1'-0"

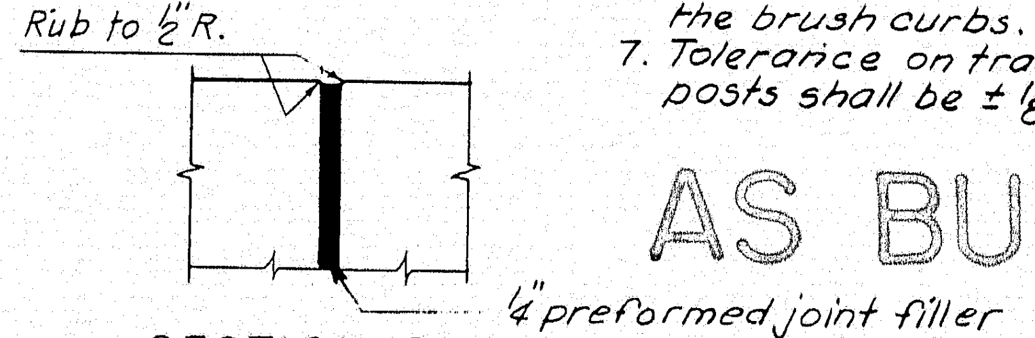

Rub to 1/2" R.
1/4" preformed joint filler

SECTION D-D
Scale: 3" = 1'-0"

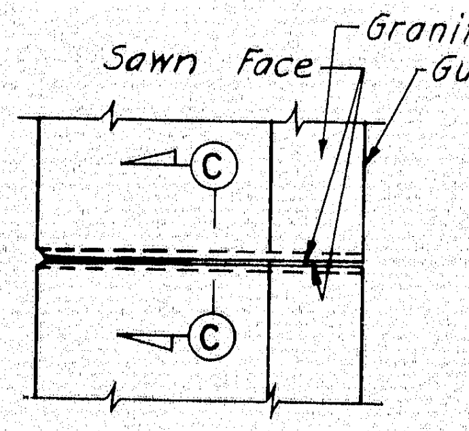

Sawn Face
Granite Curb
Gutter Line
C

SAFETY WALK CONTRACTION JOINT DETAIL
Scale: 1" = 1'-0"

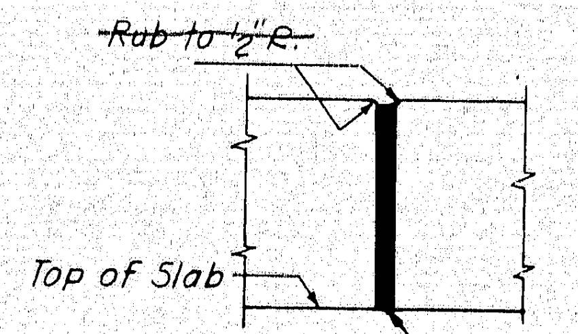

~~Rub to 1/2" R.~~
Top of Slab

SECTION C-C
Not to Scale

1/4" preformed joint filler
Not used

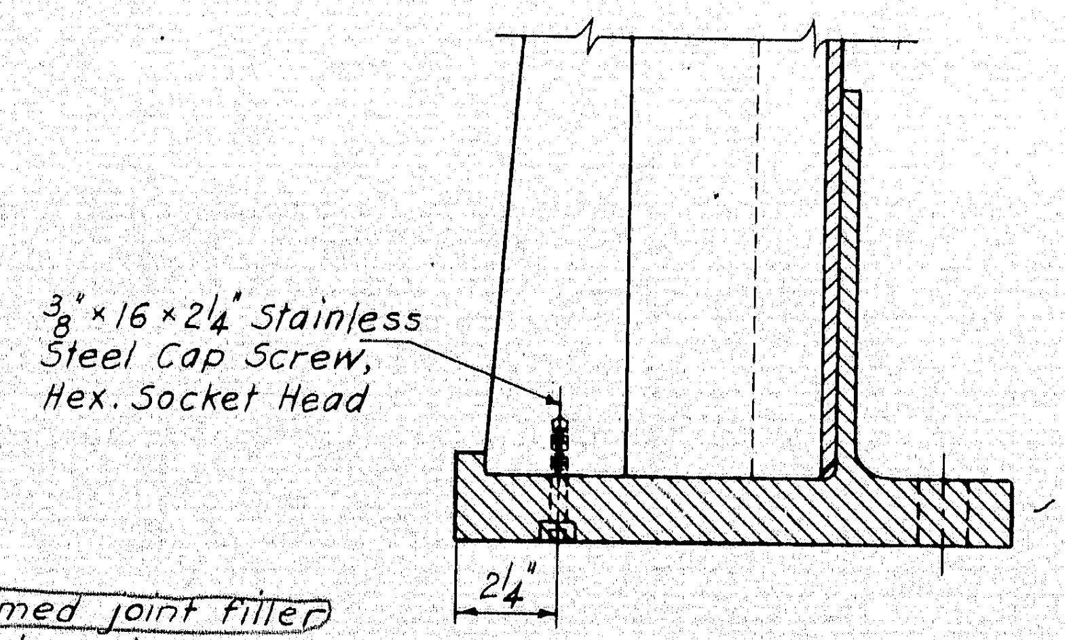

3/8" × 16 × 2 1/4" Stainless Steel Cap Screw, Hex. Socket Head
2 1/4"

SECTION E-E
Scale: 3" = 1'-0"

NOTES:

1. Rails must be continuous over a minimum of three posts.
2. Anchor bolts, nuts, washers, and cap screws shall be ASTM 276 Stainless Steel, Type 316, cold worked to 50,000 Psi. min. yield stress.
3. Posts, bases, rails, splices and rail clamps shall be ASTM B221-66 Aluminum Alloy 6061-T6.
4. Rail caps shall be ASTM B209 Aluminum Alloy 6061-T6.
5. Rivets shall be ASTM B316-66 Aluminum Alloy 6061-T6, high button head, cold driven.
6. Posts shall be set normal to the slope of the brush curbs.
7. Tolerance on transverse alignment of posts shall be ± 1/8" from theoretical line.

AS BUILT
R.W. Christie 2/5/73

5

DESIGN — R. W. Barna
TRACE — K. A. S.
CHECK — S. Nishimura

BRIDGE NO. IN CHARGE OF — Richard W. Christie

HARDESTY & HANOVER
CONSULTING ENGINEERS
NEW YORK, N. Y.

NEW HAMPSHIRE
DEPARTMENT OF PUBLIC WORKS AND HIGHWAYS
AND
MAINE STATE HIGHWAY COMMISSION
INTERSTATE 95 BRIDGE
OVER
PISCATAQUA RIVER
BETWEEN
PORTSMOUTH, NEW HAMPSHIRE AND KITTERY, MAINE

RAILING DETAILS

SHEET 48 OF 54

129-143

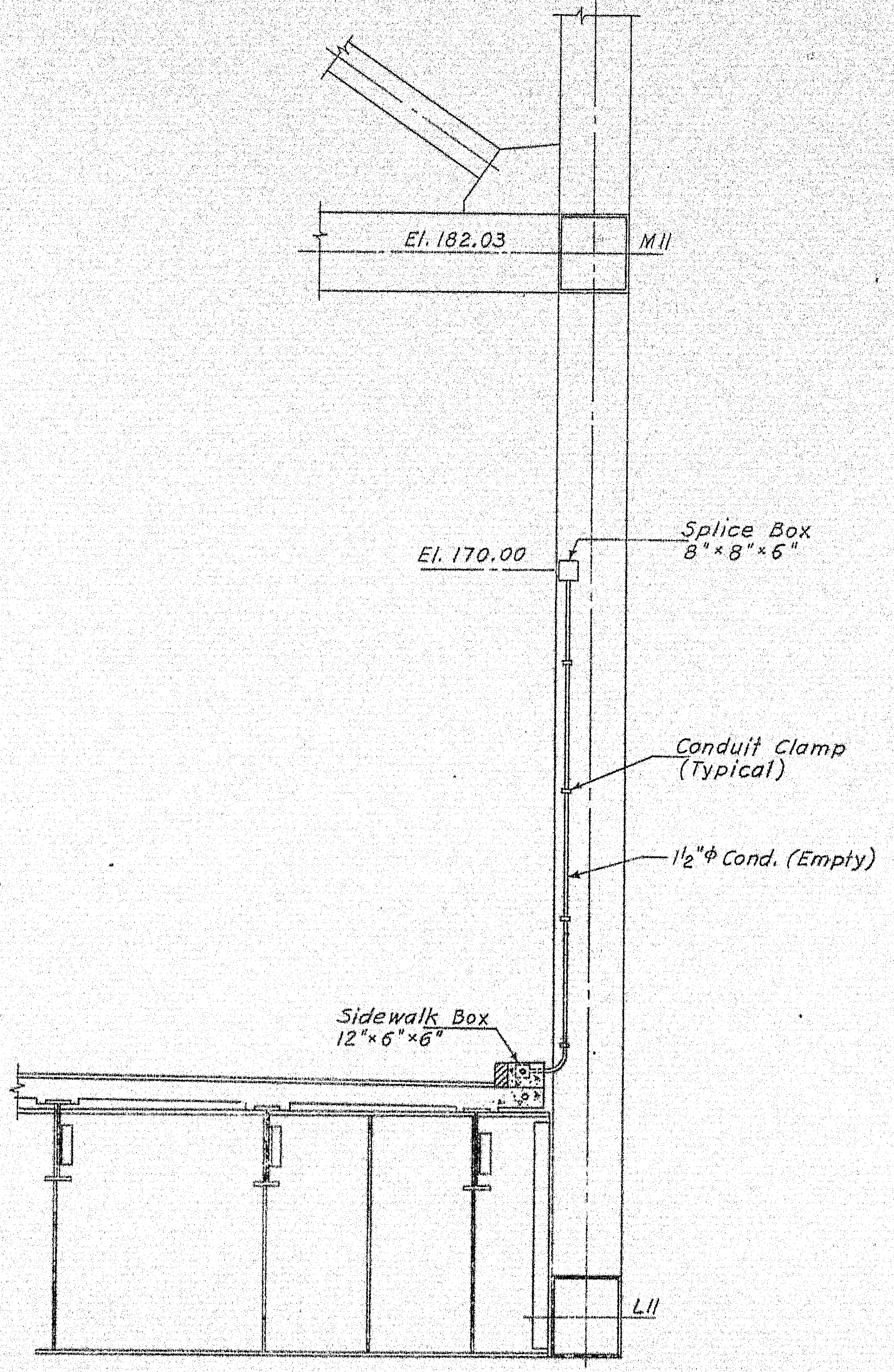
El. 182.03
M11
Splice Box
8"×8"×6"
El. 170.00
Conduit Clamp
(Typical)
1½"φ Cond. (Empty)
Sidewalk Box
12"×6"×6"
L11

SECTION F-F
ELEVATION AT PP11 SOUTH
Scale: ¼"=1'-0"

Note:
The installation at PP11
North is to be similar.

HARDESTY & HANOVER
CONSULTING ENGINEERS
NEW YORK, N.Y.

NEW HAMPSHIRE
DEPARTMENT OF PUBLIC WORKS AND HIGHWAYS
AND
MAINE STATE HIGHWAY COMMISSION
INTERSTATE 95 BRIDGE
OVER
PISCATAQUA RIVER
RIVER BRIDGE
CONDUIT FOR FUTURE SIGNS

HBH

3/3/71

Dwg. SK-E1

129-144

B. P. R. REG. NO.	STATE	PROJECT NUMBER	SHEET NO.	TOTAL SHEETS
1	MAINE	I-95-1(22)16	49	54

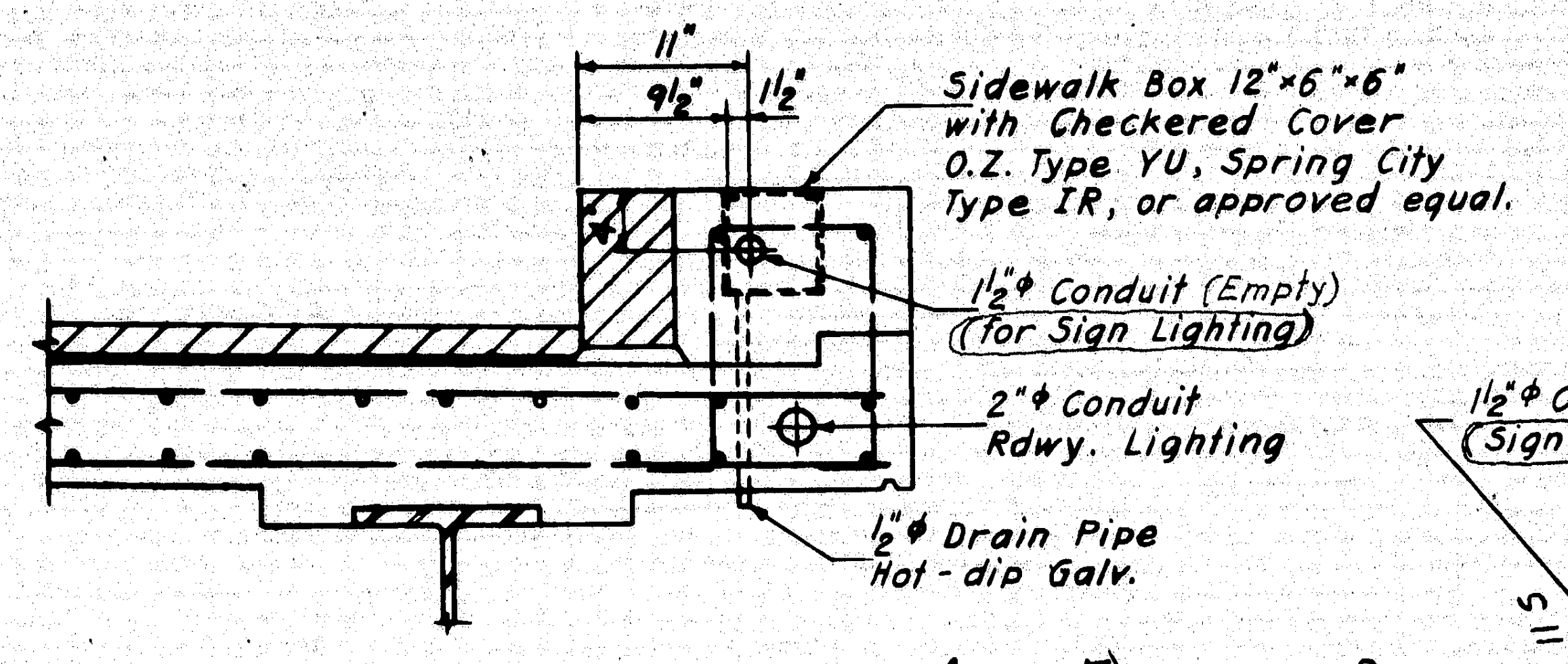

11"
9½"
1½"
1½"
Sidewalk Box 12"×6"×6" with Checkered Cover O.Z. Type YU, Spring City Type IR, or approved equal.
1½"ϕ Conduit (Empty) (for Sign Lighting)
2"ϕ Conduit Rdwy. Lighting
½"ϕ Drain Pipe Hot-dip Galv.

SECTION A-A
Scale: 1"=1'-0"

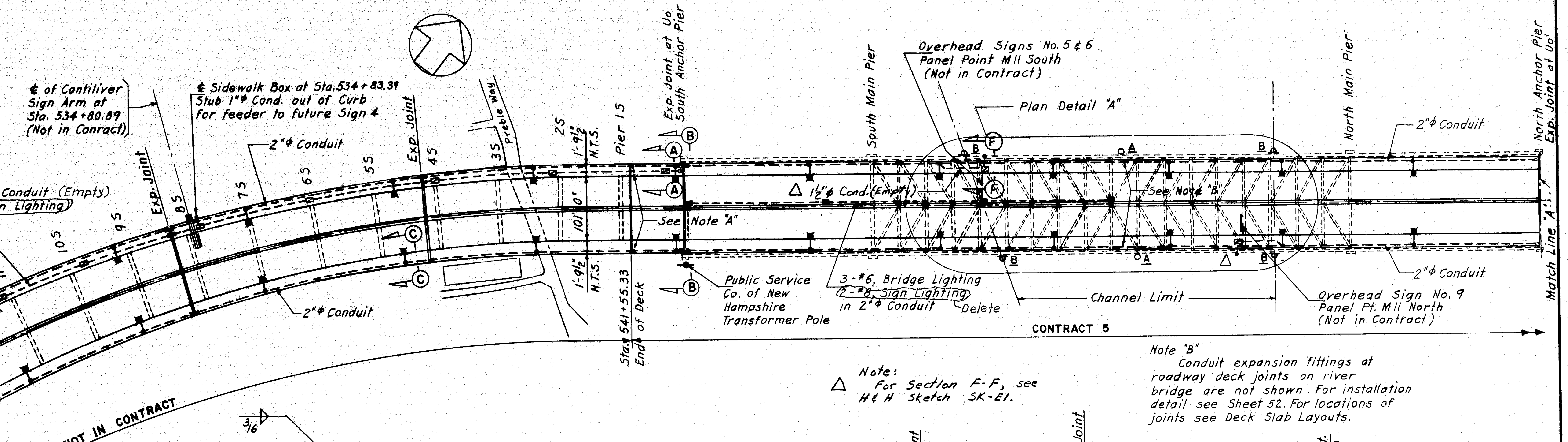

℄ of Cantiliver Sign Arm at Sta. 534+80.89 (Not in Conract)
℄ Sidewalk Box at Sta. 534+83.39 Stub 1"ϕ Cond. out of Curb for feeder to future Sign 4
2"ϕ Conduit
1½"ϕ Conduit (Empty) (Sign Lighting)
Exp. Joint
Preble Way
25
35
45
55
65
75
85
95
105
115
125
135
145
155
1'-9½"
N.T.S.
101'-0"
Pier 1S
Exp. Joint at Uo South Anchor Pier
See Note "A"
Public Service Co. of New Hampshire Transformer Pole
Sta. 541+55.33 End of Deck
South Main Pier
Overhead Signs No. 5 & 6 Panel Point M11 South (Not in Contract)
Plan Detail "A"
1½"ϕ Cond. (Empty)
See Note "B"
3-#6, Bridge Lighting
~~2-#8, Sign Lighting~~
in 2"ϕ Conduit
Delete
Channel Limit
CONTRACT 5
North Main Pier
2"ϕ Conduit
Overhead Sign No. 9 Panel Pt. M11 North (Not in Contract)
North Anchor Pier Exp. Joint at Uo'
Match Line "A"
A
B
C
F
NOT IN CONTRACT

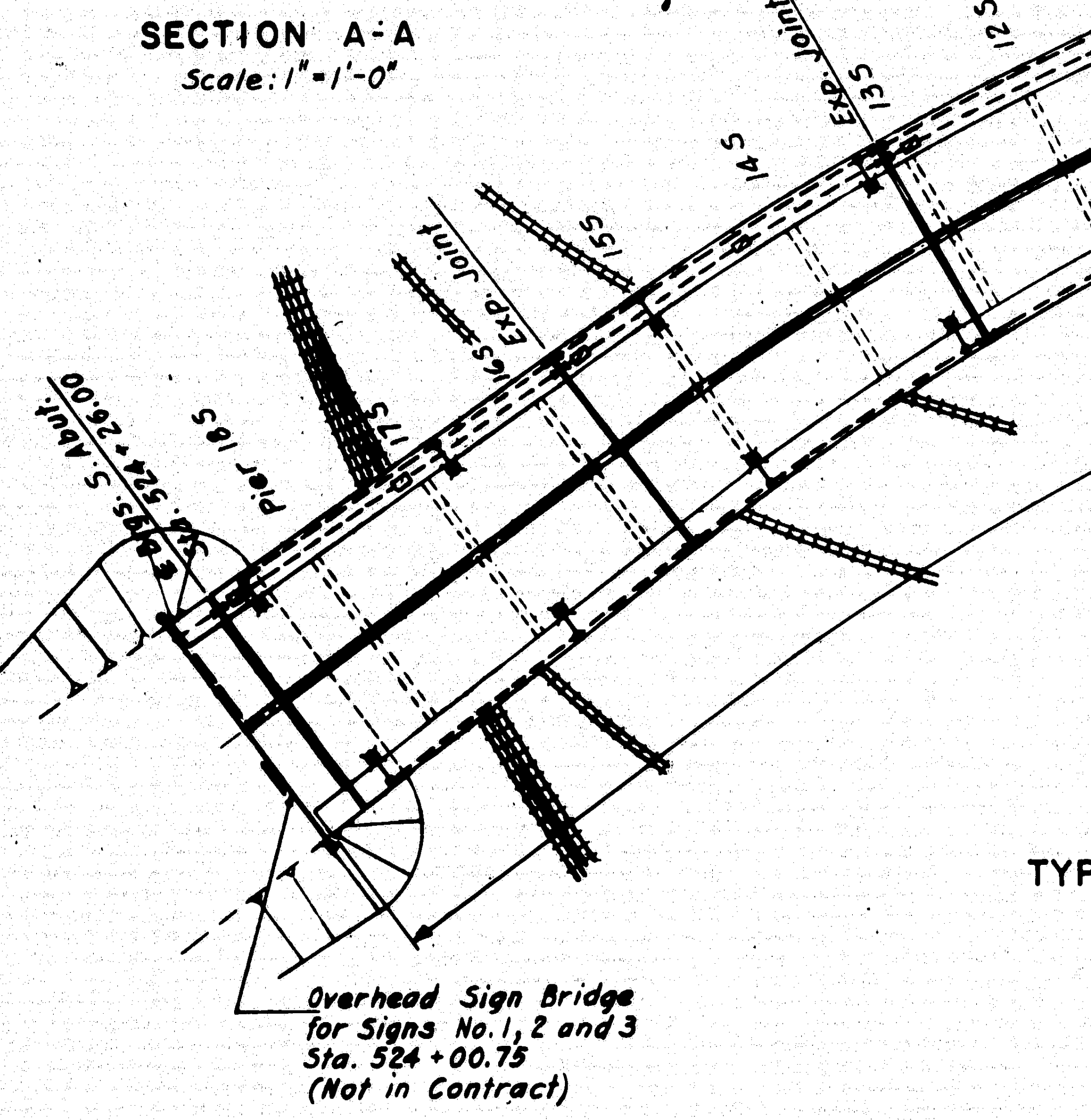

Pier 18S
℄ Brg. S. Abut. Sta. 522+00
175
Exp. Joint
Overhead Sign Bridge for Signs No. 1, 2 and 3 Sta. 524+00.75 (Not in Contract)

Note:
For Section F-F, see H & H Sketch SK-E1.

Note "B"
Conduit expansion fittings at roadway deck joints on river bridge are not shown. For installation detail see Sheet 52. For locations of joints see Deck Slab Layouts.

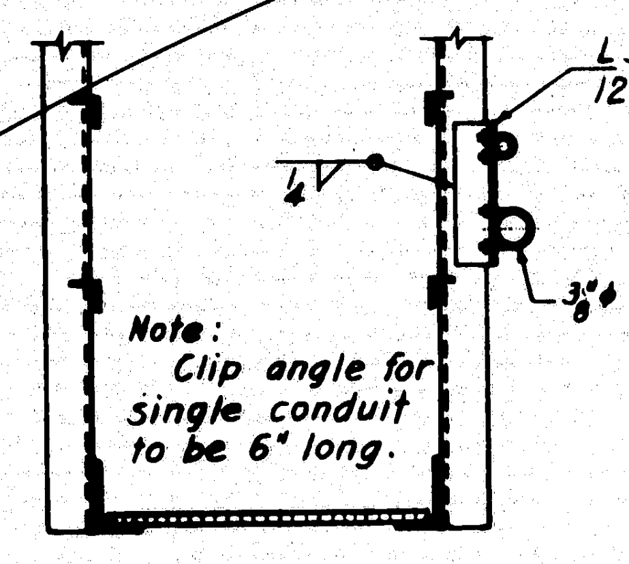

L 3½×2½×⅜ 12" Long
⅜"ϕ U-Bolts
Note: Clip angle for single conduit to be 6" long.

SECTION D-D
TYPICAL CONDUIT DETAIL AT CATWALK
Scale: ¾"=1'-0"

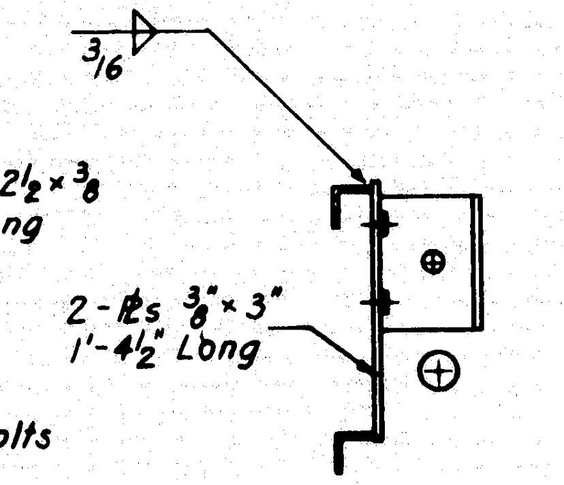

3/16
2-₱s ⅜"×3" 1'-4½" Long

TYPICAL BOX MOUNTING ON CATWALK HANDRAIL
Scale: 1"=1'-0"

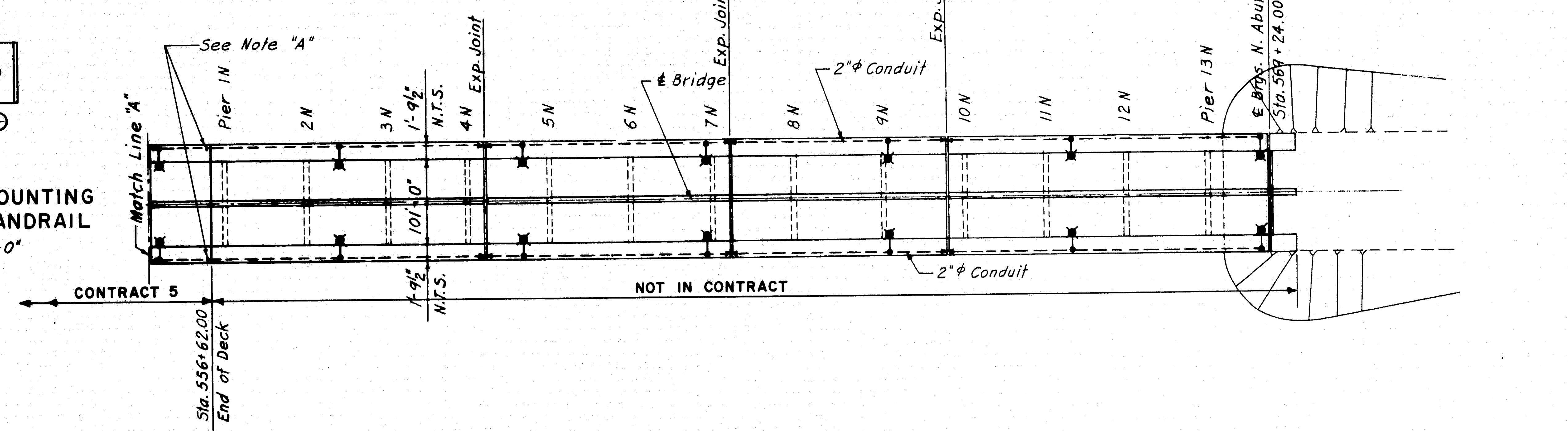

See Note "A"
Match Line "A"
Pier 1N
2N
3N
4N
5N
6N
7N
8N
9N
10N
11N
12N
Pier 13N
1'-9½"
N.T.S.
101'-0"
Exp. Joint
℄ Bridge
2"ϕ Conduit
℄ Brgs. N. Abut. Sta. 567+24.00
CONTRACT 5
NOT IN CONTRACT
Sta. 556+62.00 End of Deck

PLAN
Scale: 1"=100'-0"

Note:
This drawing does not purport to show all pull or splice boxes that may be required. The Contractor shall furnish and install any additional boxes required for proper installation of cables.

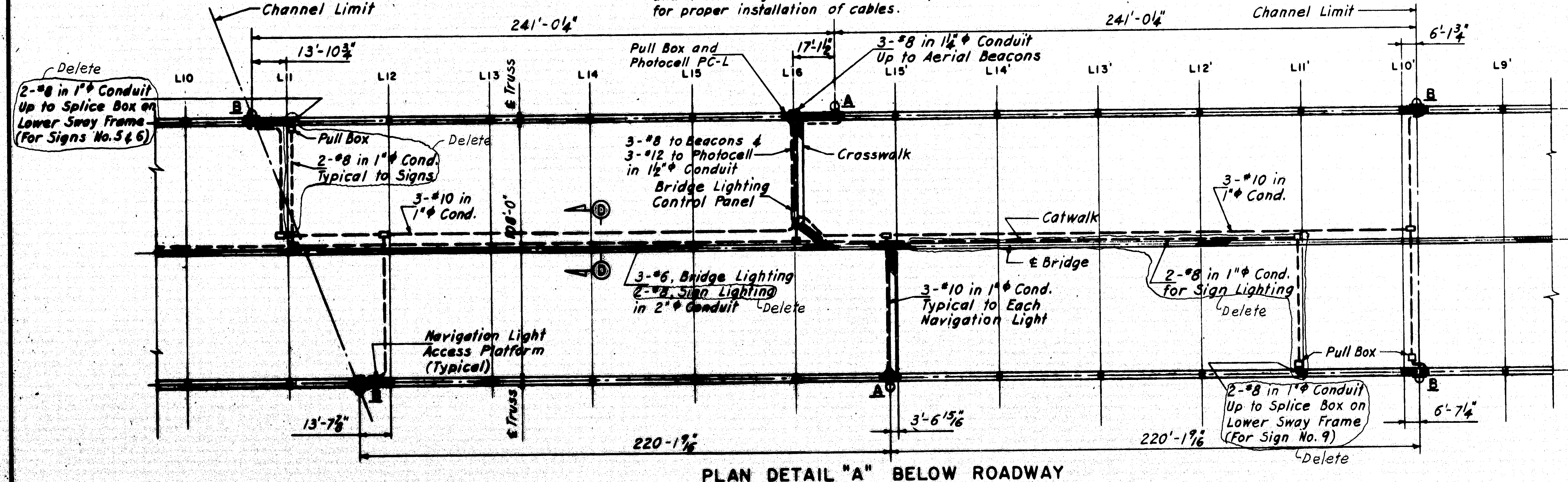

Channel Limit
241'-0¼"
13'-10¾"
17'-1½"
6'-1¾"
Delete
~~2-#8 in 1"ϕ Conduit Up to Splice Box on Lower Sway Frame (For Signs No. 5 & 6)~~
L10
L11
L12
L13
℄ Truss
L14
L15
L16
L15'
L14'
L13'
L12'
L11'
L10'
L9'
Pull Box and Photocell PC-L
3-#8 in 1½"ϕ Conduit Up to Aerial Beacons
Pull Box
~~2-#8 in 1"ϕ Cond. Typical to Signs~~
Delete
3-#8 to Beacons & 3-#12 to Photocell in 1½"ϕ Conduit
Crosswalk
Bridge Lighting Control Panel
3-#10 in 1"ϕ Cond.
108'-0"
Catwalk
℄ Bridge
3-#6, Bridge Lighting
~~2-#8, Sign Lighting~~
in 2"ϕ Conduit
Delete
3-#10 in 1"ϕ Cond. Typical to Each Navigation Light
~~2-#8 in 1"ϕ Cond. for Sign Lighting~~
Delete
Navigation Light Access Platform (Typical)
Pull Box
~~2-#8 in 1"ϕ Conduit Up to Splice Box on Lower Sway Frame (For Sign No. 9)~~
Delete
13'-7⅞"
220'-1 9/16"
3'-6 15/16"
220'-1 9/16"
6'-7¼"
A
B

PLAN DETAIL "A" BELOW ROADWAY
SCHEMATIC CONDUIT ARRANGEMENT
Scale: 1"=30'-0"

LEGEND

A○	Channel Center Light, 360° Green
B◓	Channel Margin Light, 180° Red
—●—	Anchorage for Roadway Lighting Pole
☐	Pull or Splice Box, 8"×8"×6"
☒	Pull Box, 12"×12"×6"
■	Splice Box, 6"×6"×4"
▨	Sidewalk Box, 12"×6"×6"
— — —	Conduit (Size as Noted)
⋈	Conduit Expansion Fitting

NOTE "A"
Connect to conduit installed by others in approach deck.

AS BUILT △
R. W. Christie 2/5/73

5

Notes:
1. For Section B-B see Sheet 50.
2. For locations of pole bases see Deck Slab Layouts.
3. For installation details of navigation lights and beacons, see Sheet 37.
4. For Section C-C see Sheet 52.

DESIGN — E.D.
TRACE — K.A.S.
CHECK — H.B. Hyatt

BRIDGE NO.
IN CHARGE OF — Richard W. Christie

NEW HAMPSHIRE
DEPARTMENT OF PUBLIC WORKS AND HIGHWAYS
AND
MAINE STATE HIGHWAY COMMISSION
INTERSTATE 95 BRIDGE
OVER
PISCATAQUA RIVER
BETWEEN
PORTSMOUTH, NEW HAMPSHIRE AND KITTERY, MAINE
RIVER BRIDGE
BRIDGE CONDUIT LAYOUT

HARDESTY & HANOVER
CONSULTING ENGINEERS
NEW YORK, N. Y.

SHEET 49 OF 54

129-145

B. P. R. REG. NO.	STATE	PROJECT NUMBER	SHEET NO.	TOTAL SHEETS
1	MAINE	I-95-1(22)16	50	54

NOTES FOR ELECTRIC SERVICE

1. Meter to be furnished by the Public Service Co. of New Hampshire and installed by Contractor.
2. Conduits embedded in pier column to be furnished and installed by others.
3. Ground rod, 3/4" Ø by 8 feet long to be installed adjacent to buried pull box for grounding secondary of the bridge lighting transformer.
4. Contractor to leave sufficient slack cable to permit connections by Public Service Co.
5. The service switch shall be a water-tight, fused safety switch, 2-Pole, 60 Amp., 600 V. (A-C) with 2-30 Amp, N.E.C. fuses.

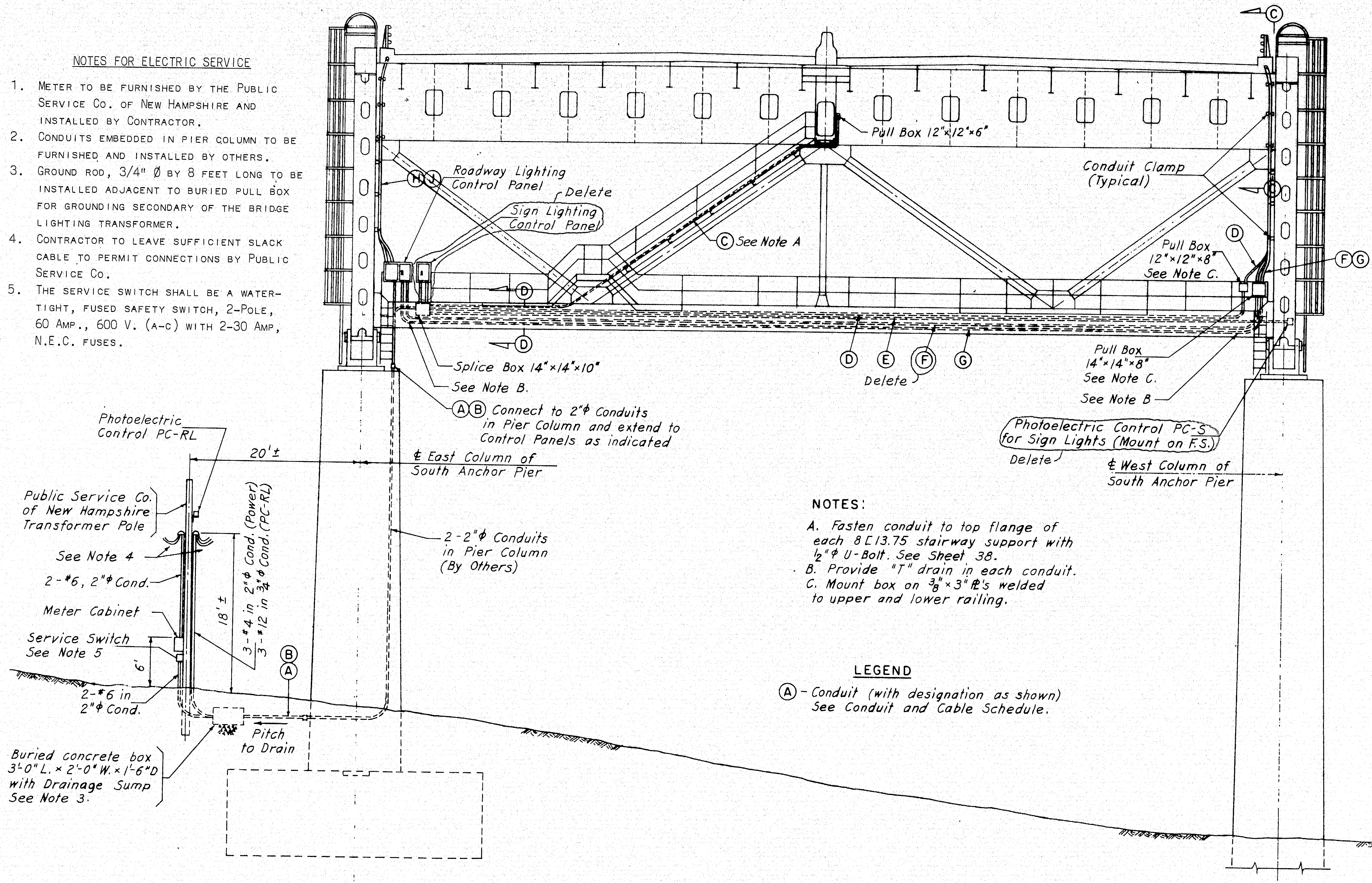

C
Pull Box 12"×12"×6"
Ⓗ Ⓙ Roadway Lighting Control Panel
Delete
Sign Lighting Control Panel
Ⓒ See Note A
Conduit Clamp (Typical)
Ⓓ
Pull Box 12"×12"×8" See Note C.
Ⓕ Ⓖ
Ⓓ Ⓔ Ⓕ Ⓖ
Delete
Splice Box 14"×14"×10"
See Note B.
Ⓐ Ⓑ Connect to 2"ϕ Conduits in Pier Column and extend to Control Panels as indicated
Pull Box 14"×14"×8" See Note C.
See Note B
Photoelectric Control PC-S for Sign Lights (Mount on F.S.)
Delete
℄ East Column of South Anchor Pier
℄ West Column of South Anchor Pier
20'±
Photoelectric Control PC-RL
Public Service Co. of New Hampshire Transformer Pole
See Note 4
2-#6, 2"ϕ Cond.
Meter Cabinet
Service Switch See Note 5
6'
18'±
3-#4 in 2"ϕ Cond. (Power)
3-#12 in 3/4"ϕ Cond. (PC-RL)
Ⓑ Ⓐ
2-#6 in 2"ϕ Cond.
2-2"ϕ Conduits in Pier Column (By Others)
Buried concrete box 3'-0" L. × 2'-0" W. × 1'-6" D with Drainage Sump See Note 3.
Pitch to Drain

NOTES:

A. Fasten conduit to top flange of each 8 ⊏ 13.75 stairway support with 1/2"ϕ U-Bolt. See Sheet 38.
B. Provide "T" drain in each conduit.
C. Mount box on 3/8"×3" ℙ's welded to upper and lower railing.

LEGEND

Ⓐ - Conduit (with designation as shown) See Conduit and Cable Schedule.

SECTION B-B

Scale: 1/8" = 1'-0"

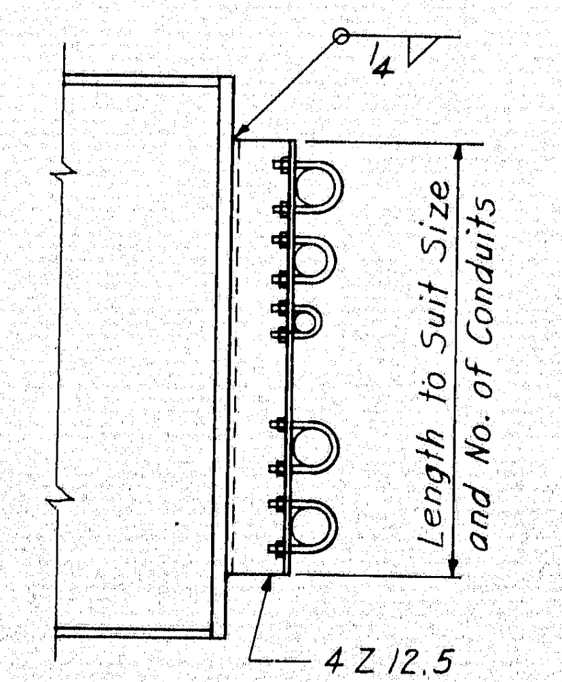

4
Length to Suit Size and No. of Conduits
4 Z 12.5

SECTION D-D
TYPICAL SUPPORT FOR CONDUITS
MOUNTED ON STEEL MEMBERS

Scale: 1/2" = 1'-0"

NOTES FOR CONDUIT SUPPORTS:

1. All conduit brackets to be detailed on Structural Steel shop drawings.
2. The spacing of brackets shall not exceed 5 feet.
3. All U-bolts to be 3/8" diameter min., hot-dip galvanized.

CONDUIT AND CABLE SCHEDULE

Designation	Size	Cables	Used for
A	2"ϕ	3-#4 3-#12	Rdwy. Ltg. Supply Photocell PC-RL
B	2"ϕ	2-#6 1-#6	Bridge Ltg. Service Ground Wire
C	2"ϕ Delete	3-#6 2-#8	Bridge Lighting Sign Lighting
D	1½"ϕ	10 Ga. Pull Wire	Sign Lighting
Delete — E	3/4"ϕ	3-#12	Photocell PC-S
F	2"ϕ	10 Ga. Pull Wire	S.W. Rdwy. Ltg. Ckt.
G	2"ϕ	10 Ga. Pull Wire	N.W. Rdwy. Ltg. Ckt.
H	2"ϕ	10 Ga. Pull Wire	S.E. Rdwy. Ltg. Ckt.
J	2"ϕ	10 Ga. Pull Wire	N.E. Rdwy. Ltg. Ckt.

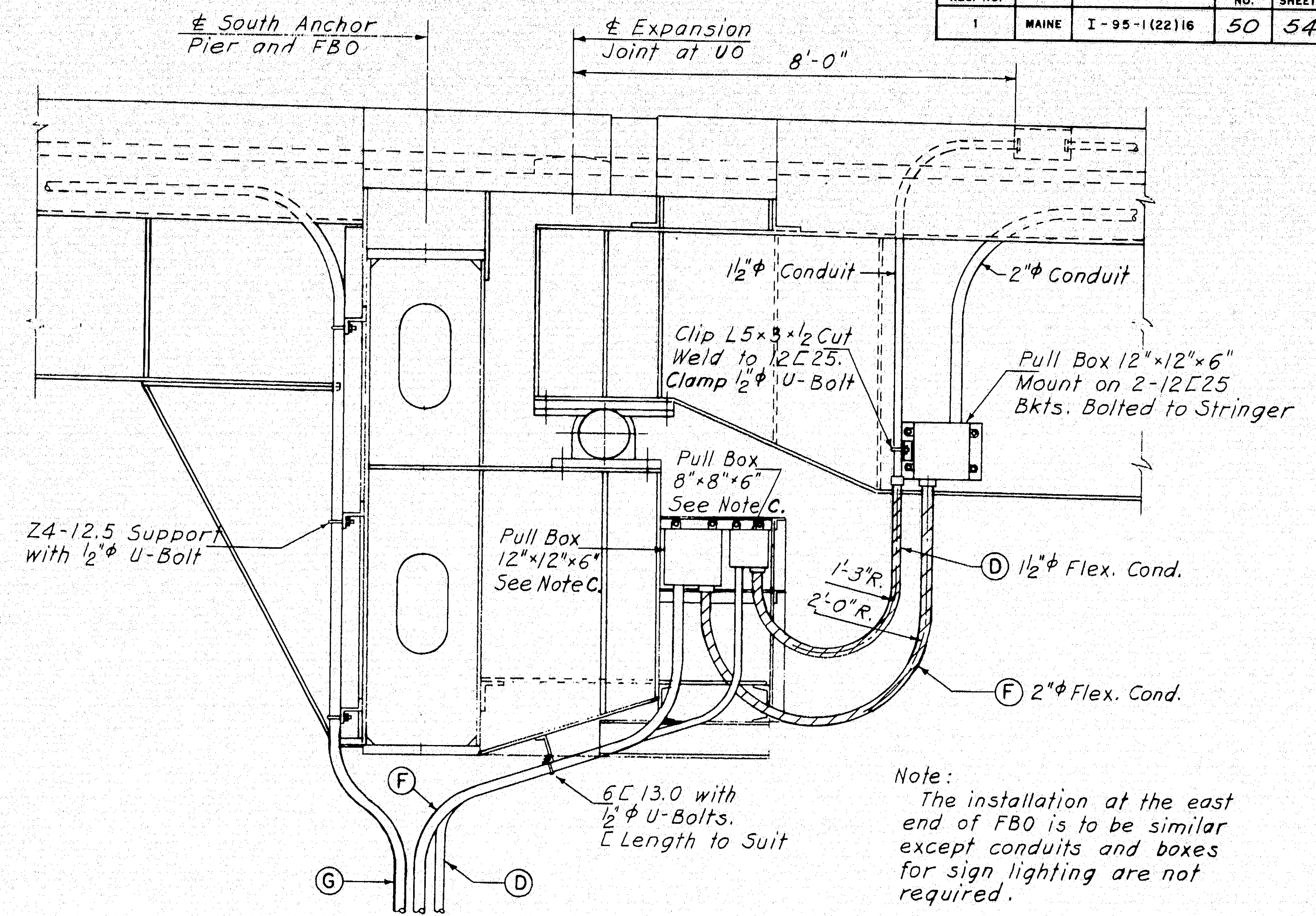

℄ South Anchor Pier and FBO
℄ Expansion Joint at U0
8'-0"
1½"ϕ Conduit
2"ϕ Conduit
Clip L5×3×½ Cut Weld to 12⊏25. Clamp ½"ϕ U-Bolt
Pull Box 12"×12"×6" Mount on 2-12⊏25 Bkts. Bolted to Stringer
Pull Box 8"×8"×6" See Note C.
Pull Box 12"×12"×6" See Note C.
Z4-12.5 Support with ½"ϕ U-Bolt
Ⓓ 1½"ϕ Flex. Cond.
1'-3"R.
2'-0"R.
Ⓕ 2"ϕ Flex. Cond.
Ⓕ
6⊏13.0 with ½"ϕ U-Bolts. ⊏ Length to Suit
Ⓖ
Ⓓ

Note:
The installation at the east end of FBO is to be similar except conduits and boxes for sign lighting are not required.

SECTION C-C

Scale: 1/2" = 1'-0"

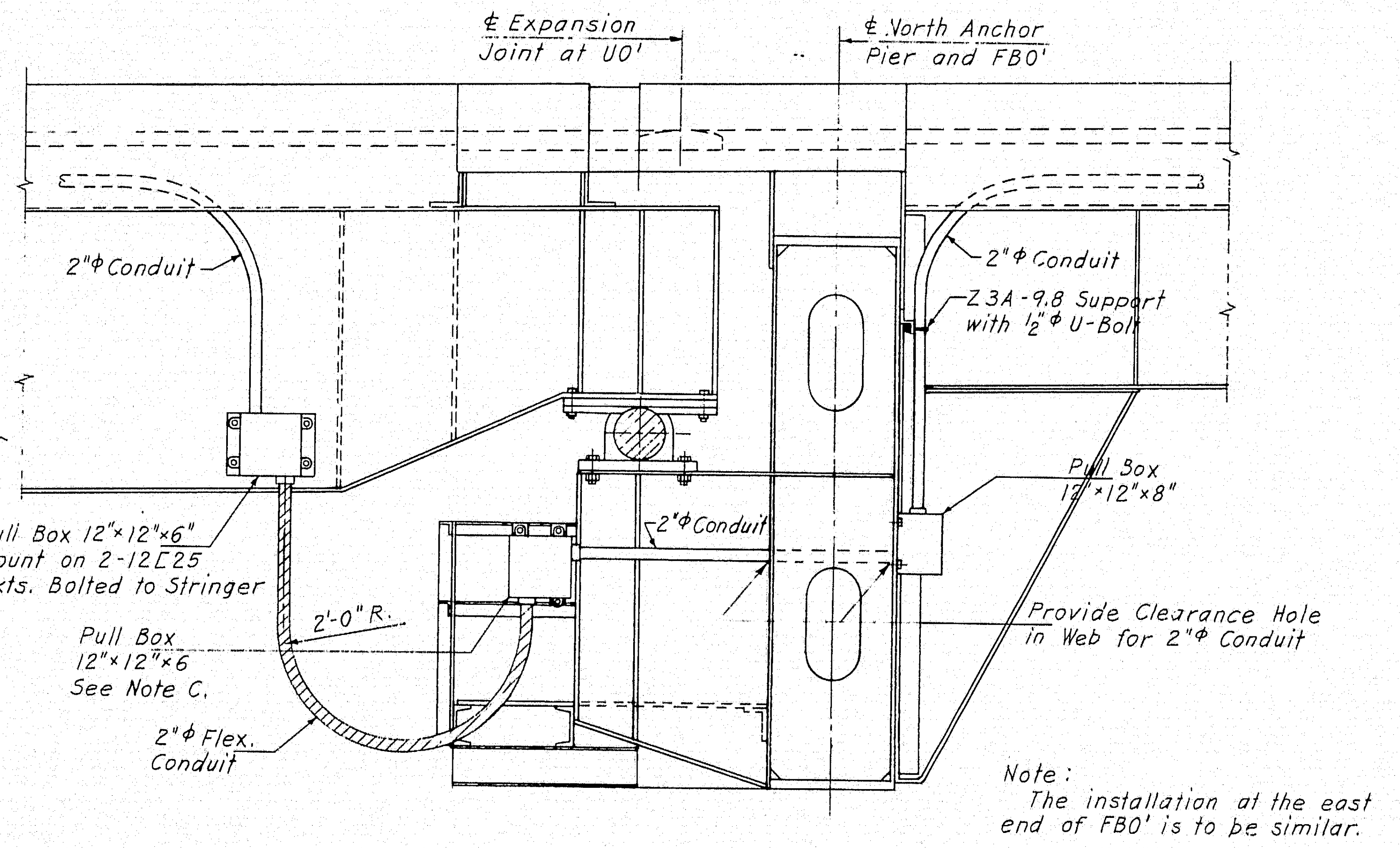

℄ Expansion Joint at U0'
℄ North Anchor Pier and FBO'
2"ϕ Conduit
2"ϕ Conduit
Z3A-9.8 Support with ½"ϕ U-Bolt
Pull Box 12"×12"×8"
2"ϕ Conduit
Pull Box 12"×12"×6" Mount on 2-12⊏25 Bkts. Bolted to Stringer
2'-0" R.
Pull Box 12"×12"×6 See Note C.
2"ϕ Flex. Conduit
Provide Clearance Hole in Web for 2"ϕ Conduit

Note:
The installation at the east end of FBO' is to be similar.

SECTION C'-C'

Scale: 1/2" = 1'-0"

AS BUILT
R. W. Christie 2/5/73

5

NOTES:

1. For structural supports for Control Panels see Sheets 36 and 38.
2. For Section Marks B-B see Sheet 49.

HARDESTY & HANOVER
CONSULTING ENGINEERS
NEW YORK, N. Y.

DESIGN — E. D.
TRACE — K. A. S.
CHECK — H. B. Hyatt

BRIDGE NO.
IN CHARGE OF — Richard W. Christie

NEW HAMPSHIRE
DEPARTMENT OF PUBLIC WORKS AND HIGHWAYS
AND
MAINE STATE HIGHWAY COMMISSION
INTERSTATE 95 BRIDGE
OVER
PISCATAQUA RIVER
BETWEEN
PORTSMOUTH, NEW HAMPSHIRE AND KITTERY, MAINE
RIVER BRIDGE

CONDUIT DETAILS

SHEET 50 OF 54

129-146

B. P. R. REG. NO.	STATE	PROJECT NUMBER	SHEET NO.	TOTAL SHEETS
1	MAINE	I-95-1(22)16	51	54

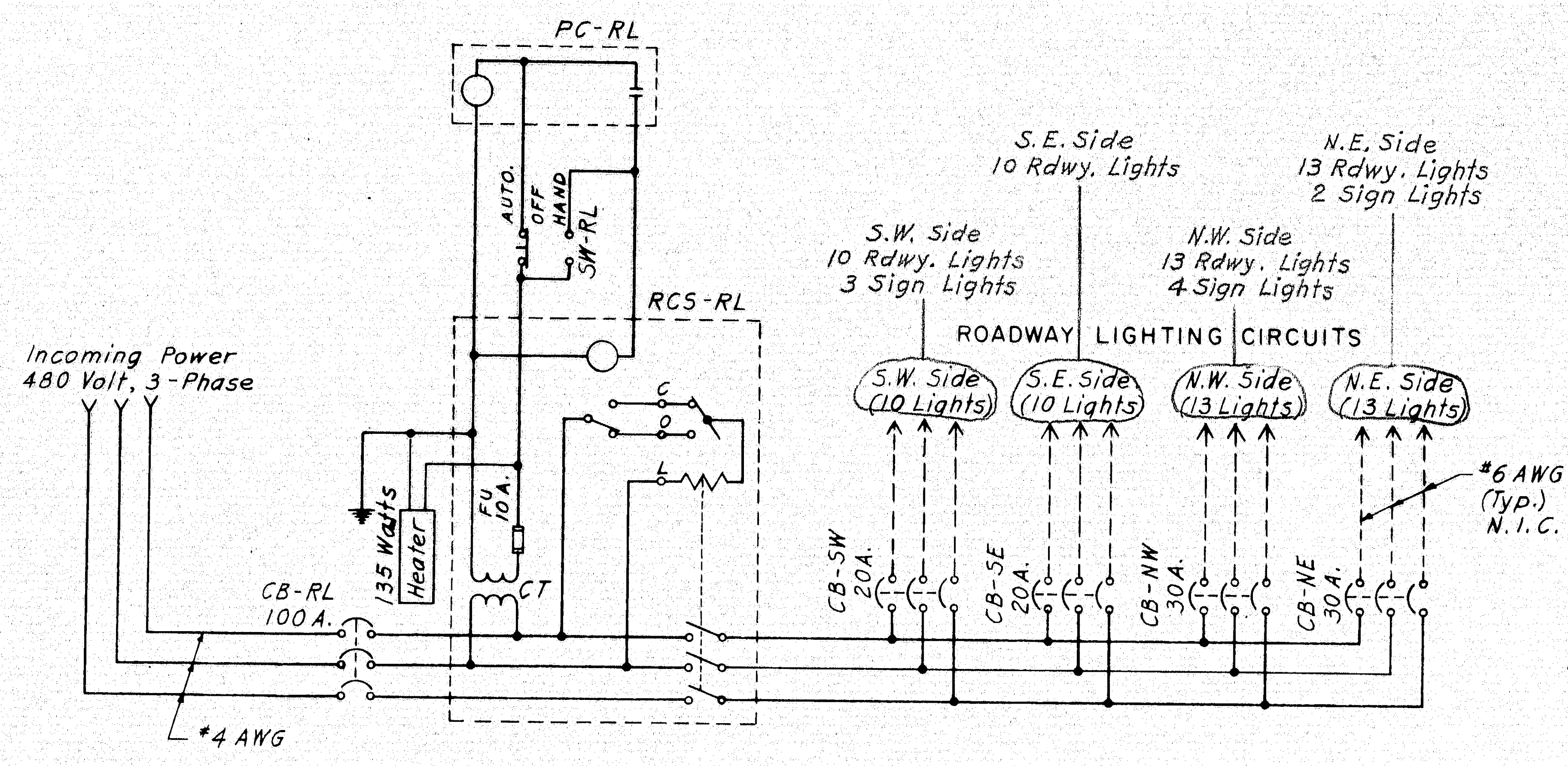
PC-RL
AUTO.
OFF
HAND
SW-RL
RCS-RL
Incoming Power
480 Volt, 3-Phase
135 Watts
Heater
FU.
10 A.
CT
C
O
L
CB-RL
100 A.
#4 AWG
S.E. Side
10 Rdwy. Lights
N.E. Side
13 Rdwy. Lights
2 Sign Lights
S.W. Side
10 Rdwy. Lights
3 Sign Lights
N.W. Side
13 Rdwy. Lights
4 Sign Lights
ROADWAY LIGHTING CIRCUITS
S.W. Side (10 Lights)
S.E. Side (10 Lights)
N.W. Side (13 Lights)
N.E. Side (13 Lights)
#6 AWG (Typ.) N.I.C.
CB-SW 20 A.
CB-SE 20 A.
CB-NW 30 A.
CB-NE 30 A.

WIRING DIAGRAM - ROADWAY LIGHTING
Not to Scale

SCHEDULE OF APPARATUS

DESIGNATION	NO. REQ'D.	DESCRIPTION
		ROADWAY LIGHTING PANEL
CB-RL	1	Air circuit breaker, 3P., 100 A., 600 V.
CB-SE, CB-SW	2	Air circuit breaker, 3P., 20 A., 600 V.
CB-NE, CB-NW	2	Air circuit breaker, 3P., 30 A., 600 V.
RCS-RL	1	Remote control switch, 3P., 60 A., 600V.
		electrically-operated, mechanically-held,
		with 200 va, 480/120 V. control
		transformer and auxiliary relay for
		120-volt, 2-wire control. All mounted
		on common panel.
PC-RL	1	Photoelectric control unit, 120 V.
		Turn on - 2 ft.c., Turn off - 5 ft. c.
SW-RL	1	Selector switch, 3-position, "Auto-Off-Hand"
		BRIDGE LIGHTING PANEL
CB-L	1	Air circuit breaker, 2P., 20 A., 600 V.
LT	1	Transformer, outdoor-type, 5 Kva,
		480/120 V. with 4-2½ percent taps
		above and below rated primary.
CB-OL, CB-NL	2	Air circuit breaker, 2P., 20 A., 240 V.
RCS-L	1	Remote control switch, 2P., 30 A., 600 V.
		electrically-operated, mechanically-held,
		with 120-volt control and auxiliary relay
		for 2-wire control. On common panel.
PC-L	1	Photoelectric control unit, 120V.
		Turn on - 35 ft. c., Turn off - 58 ft.c.
SW-L	1	(Same as SW-RL)
		SIGN LIGHTING PANEL
CB-S	1	Air circuit breaker, 2P., 30 A., 600 V.
RCS-S	1	Same as RCS-L except with 200 va,
		480/120 V. control transformer
PC-S	1	Photoelectric control unit, 120 V.
		Turn on 2 ft.c., Turn off - 5 ft.c.
SW-S	1	(Same as SW-RL)
CB-SS, CB-NS	2	Air circuit breaker, 2P., 20 A., 600V.

Delete

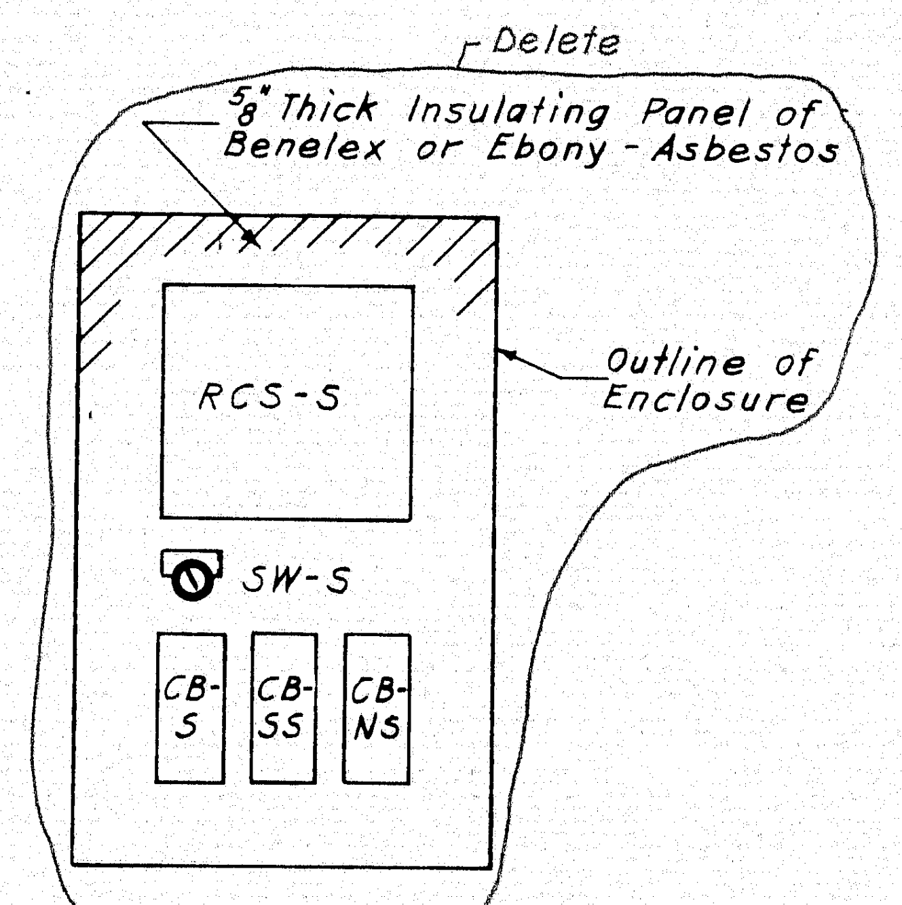
Delete
5/8" Thick Insulating Panel of Benelex or Ebony-Asbestos
Outline of Enclosure
RCS-S
SW-S
CB-S
CB-SS
CB-NS

SIGN LIGHTING

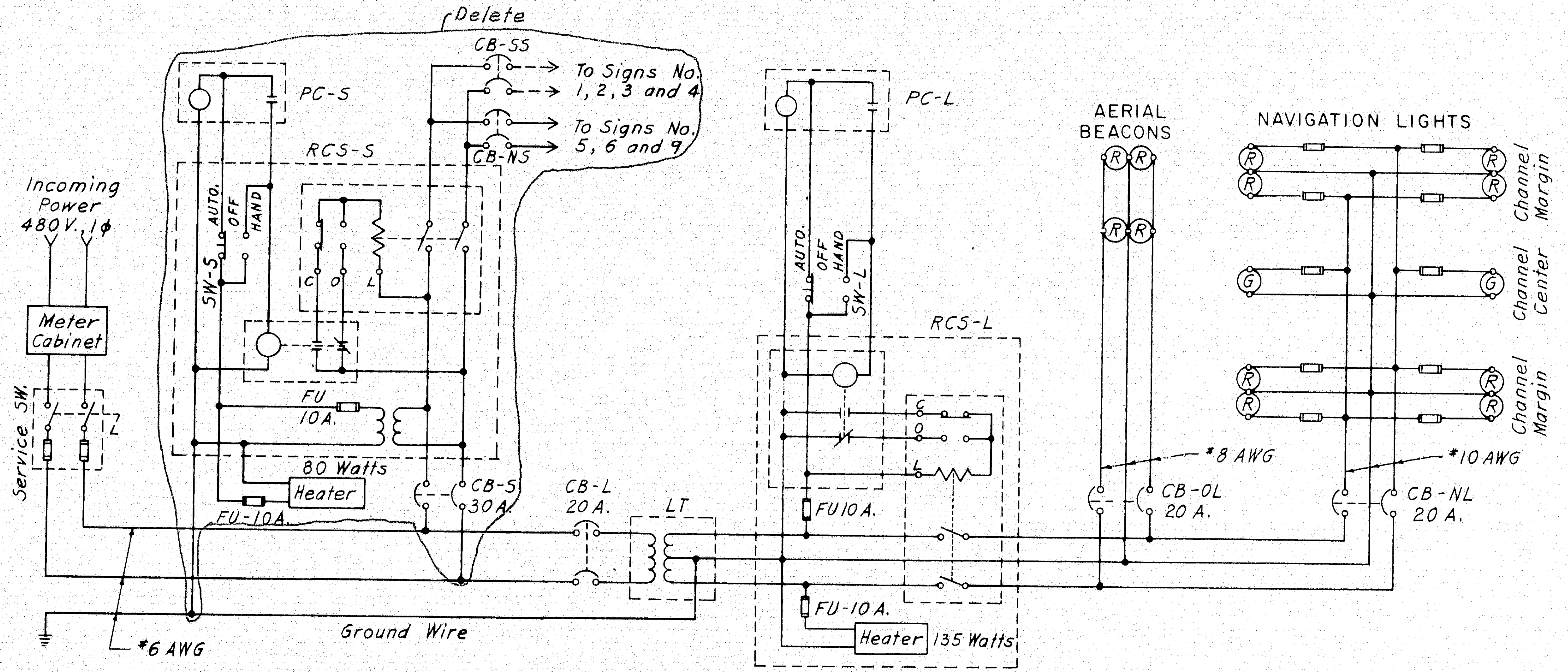
Delete
CB-SS
To Signs No. 1, 2, 3 and 4
To Signs No. 5, 6 and 9
CB-NS
PC-S
RCS-S
AUTO.
OFF
HAND
SW-S
C
O
L
FU
10 A.
80 Watts
Heater
FU-10A.
CB-S
30 A.
Incoming Power
480V., 1ϕ
Meter Cabinet
Service SW.
#6 AWG
Ground Wire
CB-L
20 A.
LT
PC-L
AUTO.
OFF
HAND
SW-L
RCS-L
FU 10 A.
FU-10 A.
Heater
135 Watts
AERIAL BEACONS
NAVIGATION LIGHTS
R
G
Channel Margin
Channel Center
Channel Margin
#8 AWG
#10 AWG
CB-OL
20 A.
CB-NL
20 A.

WIRING DIAGRAM - BRIDGE LIGHTING
Not to Scale

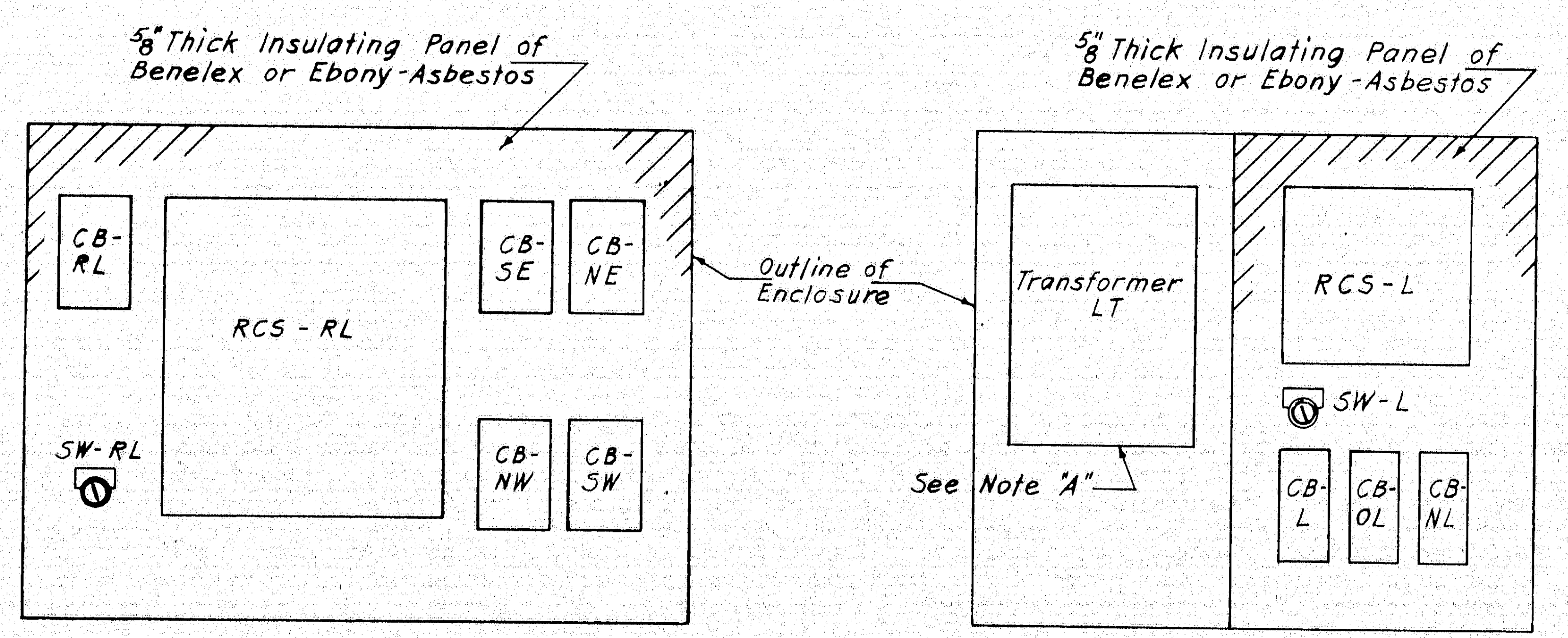
5/8" Thick Insulating Panel of Benelex or Ebony-Asbestos
CB-RL
RCS - RL
CB-SE
CB-NE
CB-NW
CB-SW
SW-RL
Outline of Enclosure
5/8" Thick Insulating Panel of Benelex or Ebony-Asbestos
Transformer LT
See Note "A"
RCS-L
SW-L
CB-L
CB-OL
CB-NL

ROADWAY LIGHTING

BRIDGE LIGHTING

Note: Fuses, terminal blocks and strip heaters are not shown.

Note "A"
Back of cabinet to be suitably reinforced for supporting the transformer.

CONTROL PANEL ARRANGEMENTS
Not to Scale

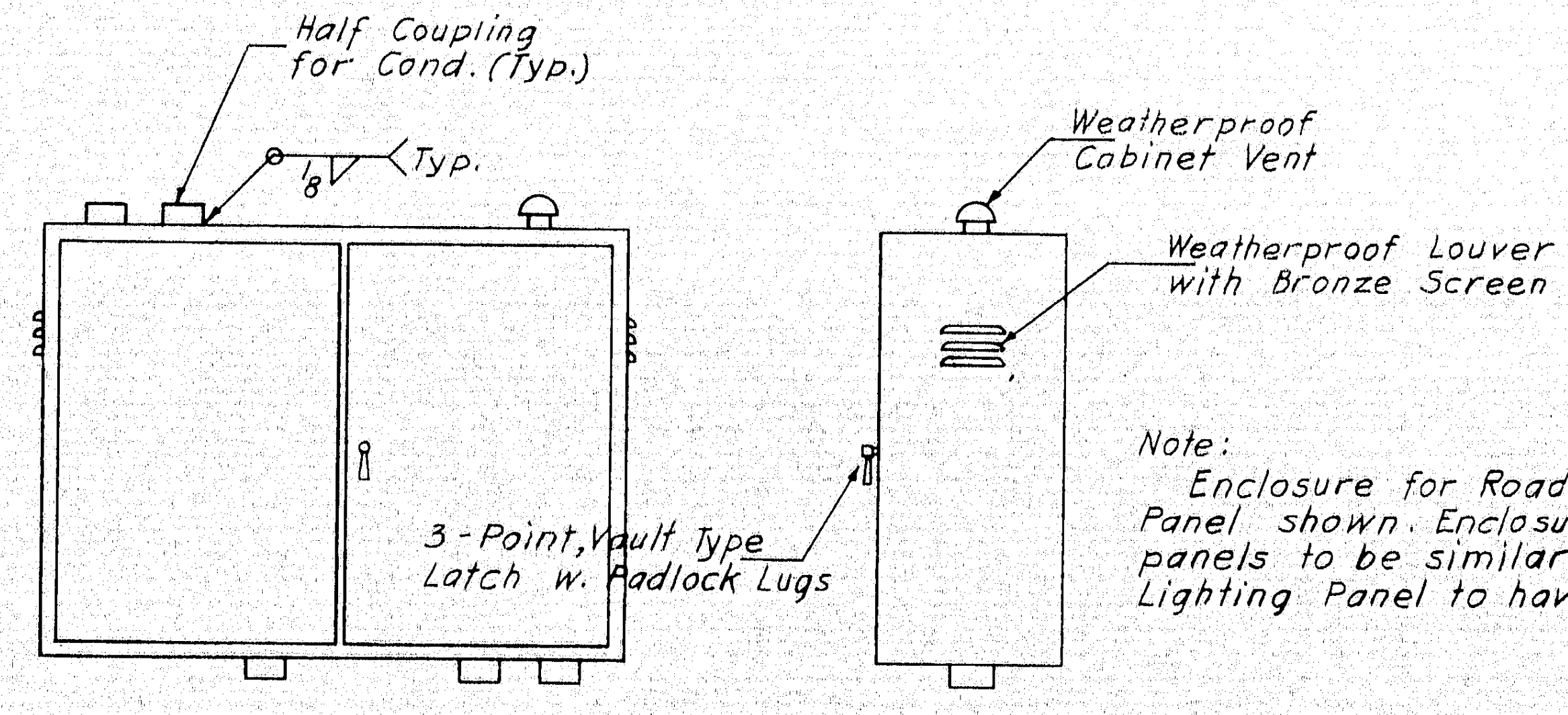
Half Coupling for Cond. (Typ.)
1/8
Typ.
3-Point, Vault Type Latch w. Padlock Lugs
Weatherproof Cabinet Vent
Weatherproof Louver with Bronze Screen

Note:
Enclosure for Roadway Lighting Panel shown. Enclosures for other panels to be similar, except Sign Lighting Panel to have a single door.

DETAILS OF ENCLOSURE
Scale: 1" = 1'-0"

AS BUILT
R. W. Christie 2/5/73

5

DESIGN — E. D.
TRACE — K. A. S.
CHECK — H. B. Hyatt

BRIDGE NO.
IN CHARGE OF — Richard W. Christie

NEW HAMPSHIRE
DEPARTMENT OF PUBLIC WORKS AND HIGHWAYS
AND
MAINE STATE HIGHWAY COMMISSION
INTERSTATE 95 BRIDGE
OVER
PISCATAQUA RIVER
BETWEEN
PORTSMOUTH, NEW HAMPSHIRE AND KITTERY, MAINE
RIVER BRIDGE

PANELS AND WIRING DIAGRAMS

SHEET 51 OF 54

HARDESTY & HANOVER
CONSULTING ENGINEERS
NEW YORK, N. Y.

129-147

B.P.R. REG. NO.	STATE	PROJECT NUMBER	SHEET NO.	TOTAL SHEETS
1	MAINE	I-95-1(22)16	52	54

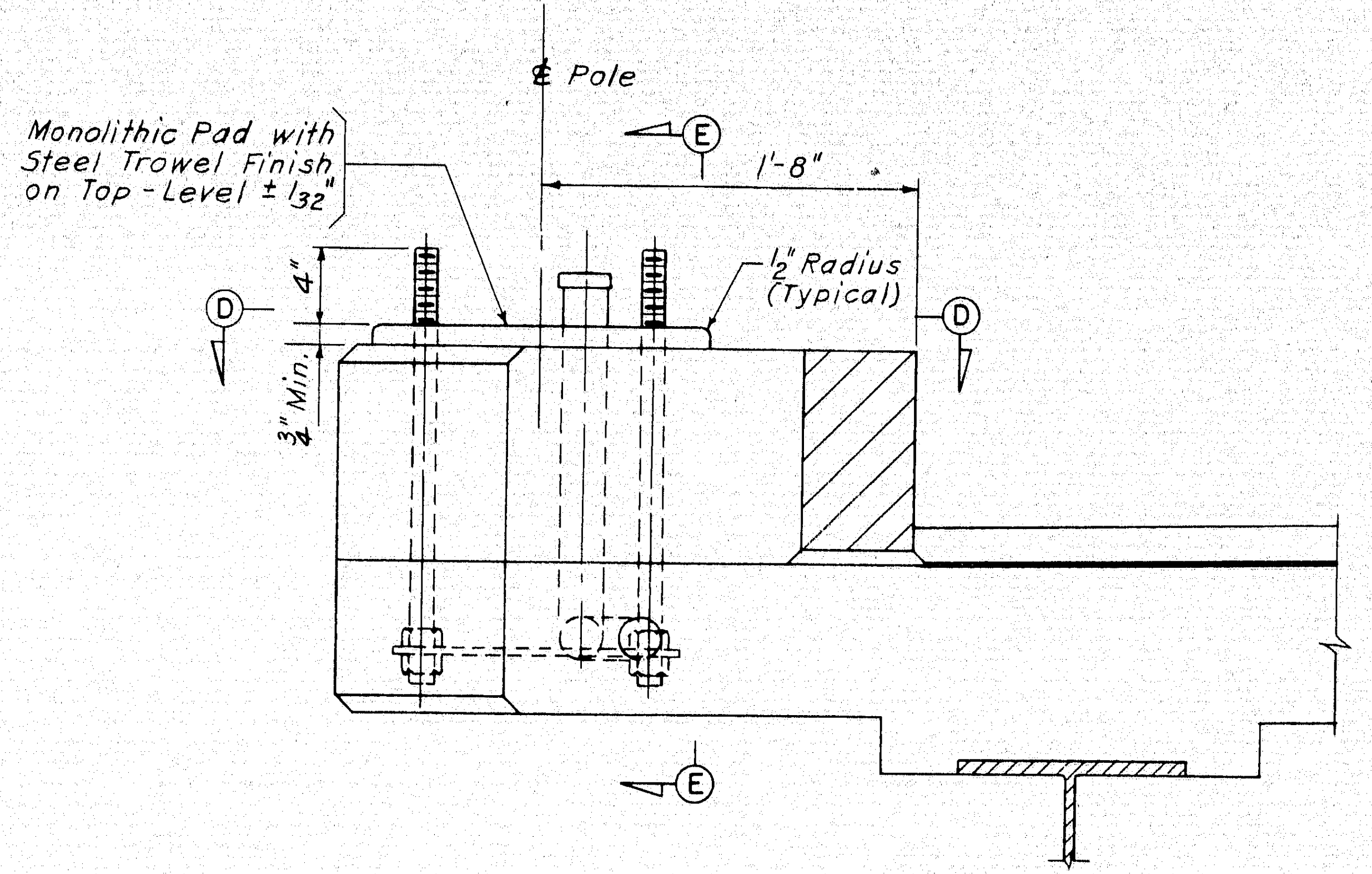

℄ Pole
Monolithic Pad with Steel Trowel Finish on Top - Level ± 1/32"
E
1'-8"
½" Radius (Typical)
D
4"
¾" Min.
D
E

SECTION C-C
TYPICAL ANCHORAGE FOR
ROADWAY LIGHTING POLE
Scale: 1½" = 1'-0"

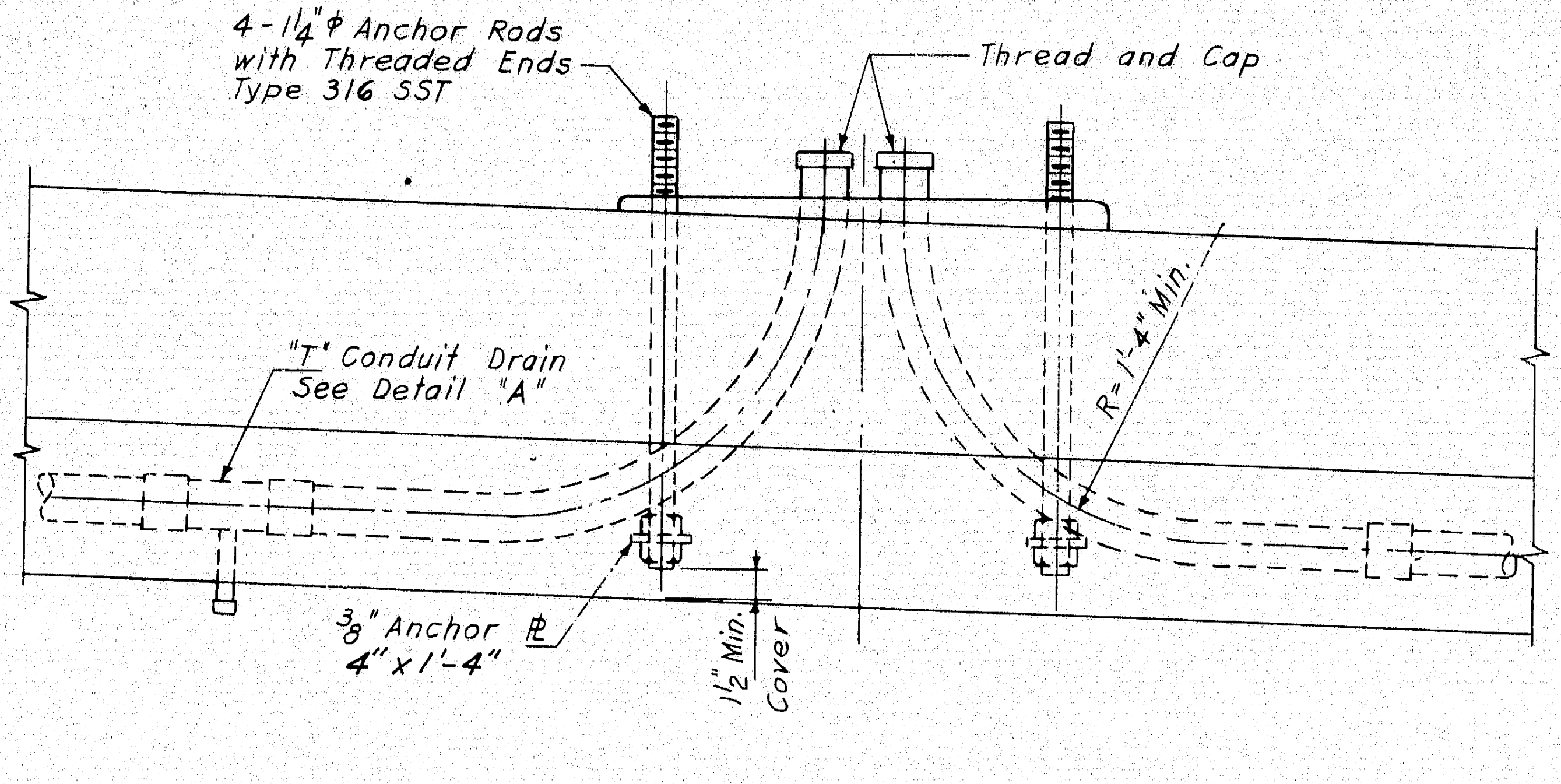

4 - 1¼"ϕ Anchor Rods with Threaded Ends Type 316 SST
Thread and Cap
"T" Conduit Drain See Detail "A"
R = 1'-4" Min.
⅜" Anchor ℄ 4" x 1'-4"
1½" Min. Cover

SECTION E-E
Scale: 1½" = 1'-0"

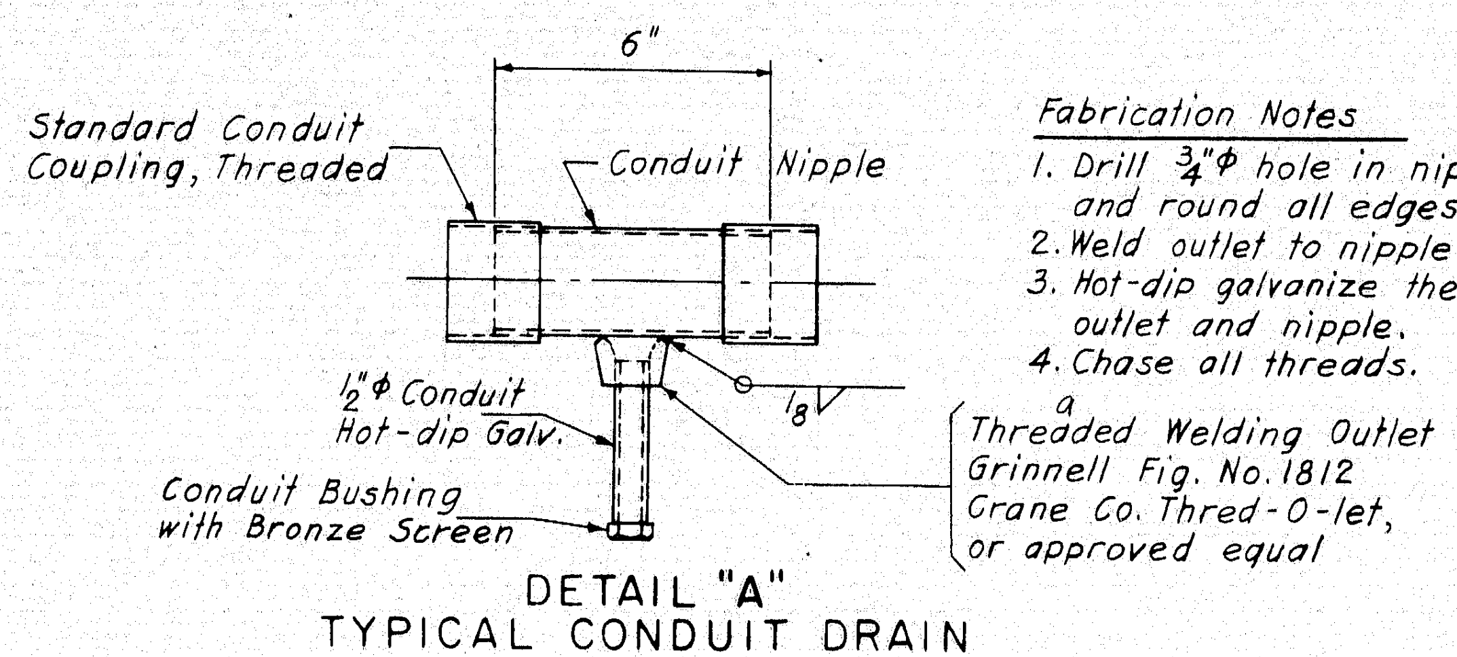

6"
Standard Conduit Coupling, Threaded
Conduit Nipple
½"ϕ Conduit Hot-dip Galv.
Conduit Bushing with Bronze Screen
1/8
a Threaded Welding Outlet Grinnell Fig. No. 1812 Grane Co. Thred-O-let, or approved equal

Fabrication Notes
1. Drill ¾"ϕ hole in nipple and round all edges.
2. Weld outlet to nipple.
3. Hot-dip galvanize the outlet and nipple.
4. Chase all threads.

DETAIL "A"
TYPICAL CONDUIT DRAIN
Scale: 3" = 1'-0"

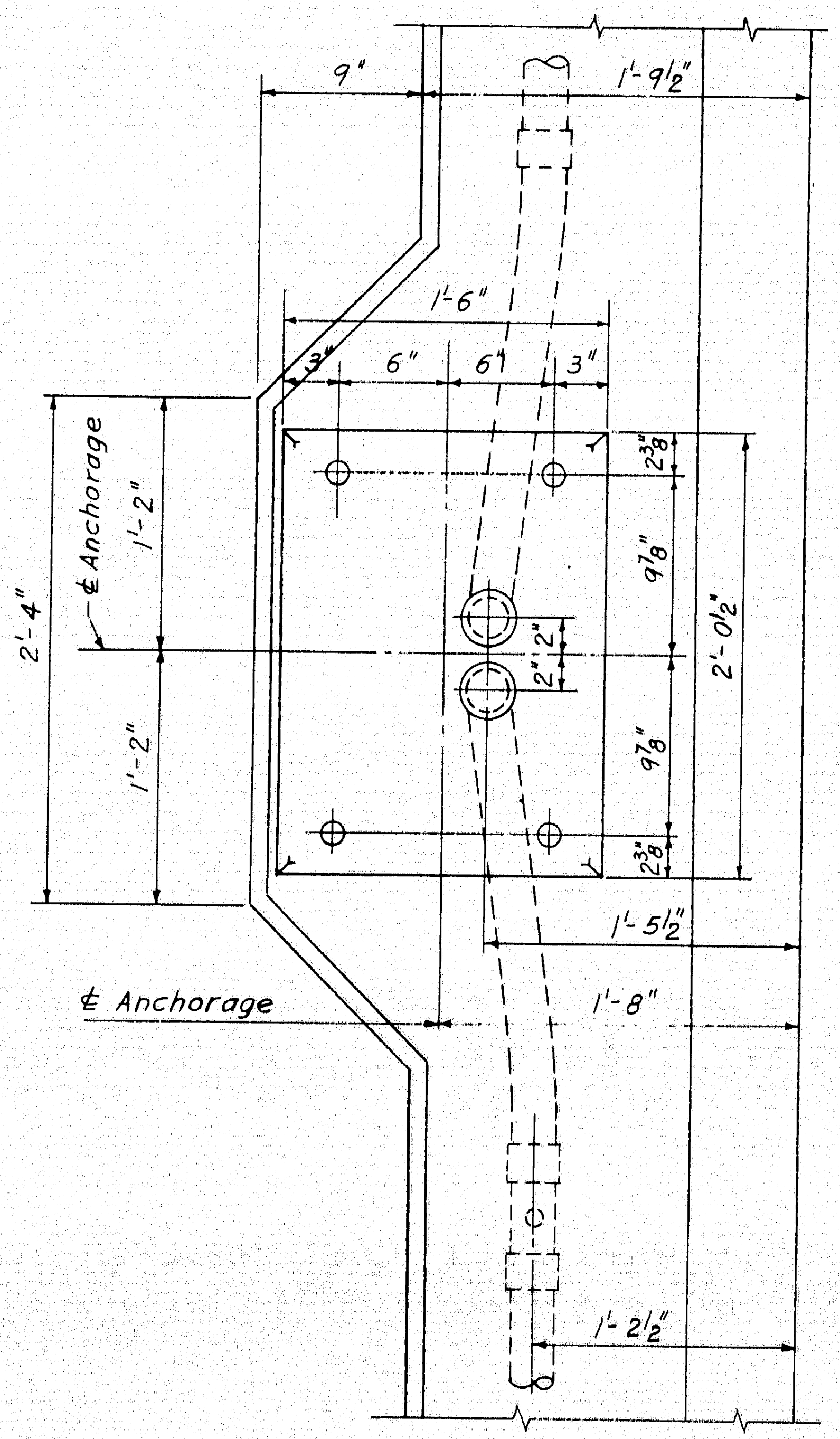

9"
1'-9½"
1'-6"
3"
6"
6"
3"
℄ Anchorage
2'-4"
1'-2"
1'-2"
2⅜"
9⅞"
2"
2"
9⅞"
2⅜"
2'-0½"
1'-5½"
℄ Anchorage
1'-8"
1'-2½"

Note:
Anchor rods to be set by steel template.

SECTION D-D
Scale: 1½" = 1'-0"

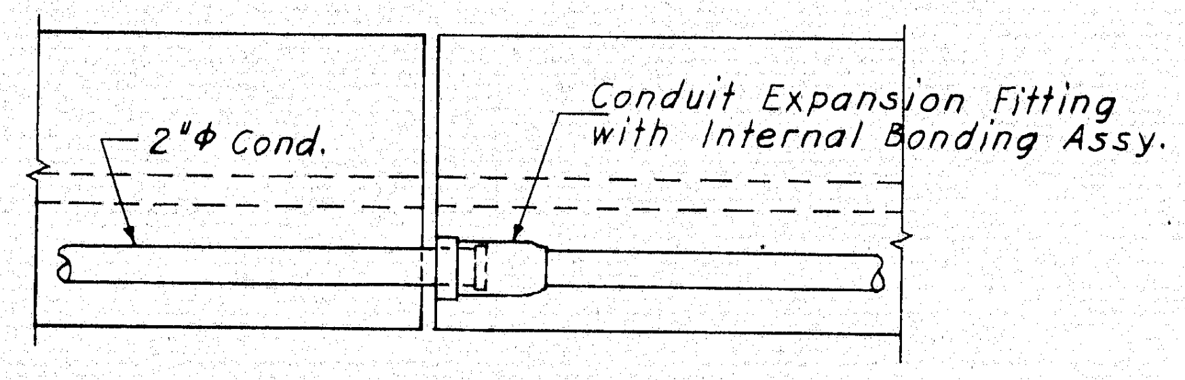

2"ϕ Cond.
Conduit Expansion Fitting with Internal Bonding Assy.

TYPICAL DETAIL AT
ROADWAY DECK JOINT
Scale: 1" = 1'-0"

NOTE:
For Section Marks C-C see Sheet 49.

AS BUILT
R. W. Christie 2/5/73

5

DESIGN — E.D.
TRACE — K.A.S.
CHECK — H.B. Hyatt

BRIDGE NO.
IN CHARGE OF — Richard W. Christie

NEW HAMPSHIRE
DEPARTMENT OF PUBLIC WORKS AND HIGHWAYS
AND
MAINE STATE HIGHWAY COMMISSION
INTERSTATE 95 BRIDGE
OVER
PISCATAQUA RIVER
BETWEEN
PORTSMOUTH, NEW HAMPSHIRE AND KITTERY, MAINE
RIVER BRIDGE

ROADWAY LIGHTING DETAILS

SHEET 52 OF 54

HARDESTY & HANOVER
CONSULTING ENGINEERS
NEW YORK, N.Y.

129-148

B. P. R. REG. NO.	STATE	PROJECT NUMBER	SHEET NO.	TOTAL SHEETS
1	MAINE	I—95—1(22)16	53	54

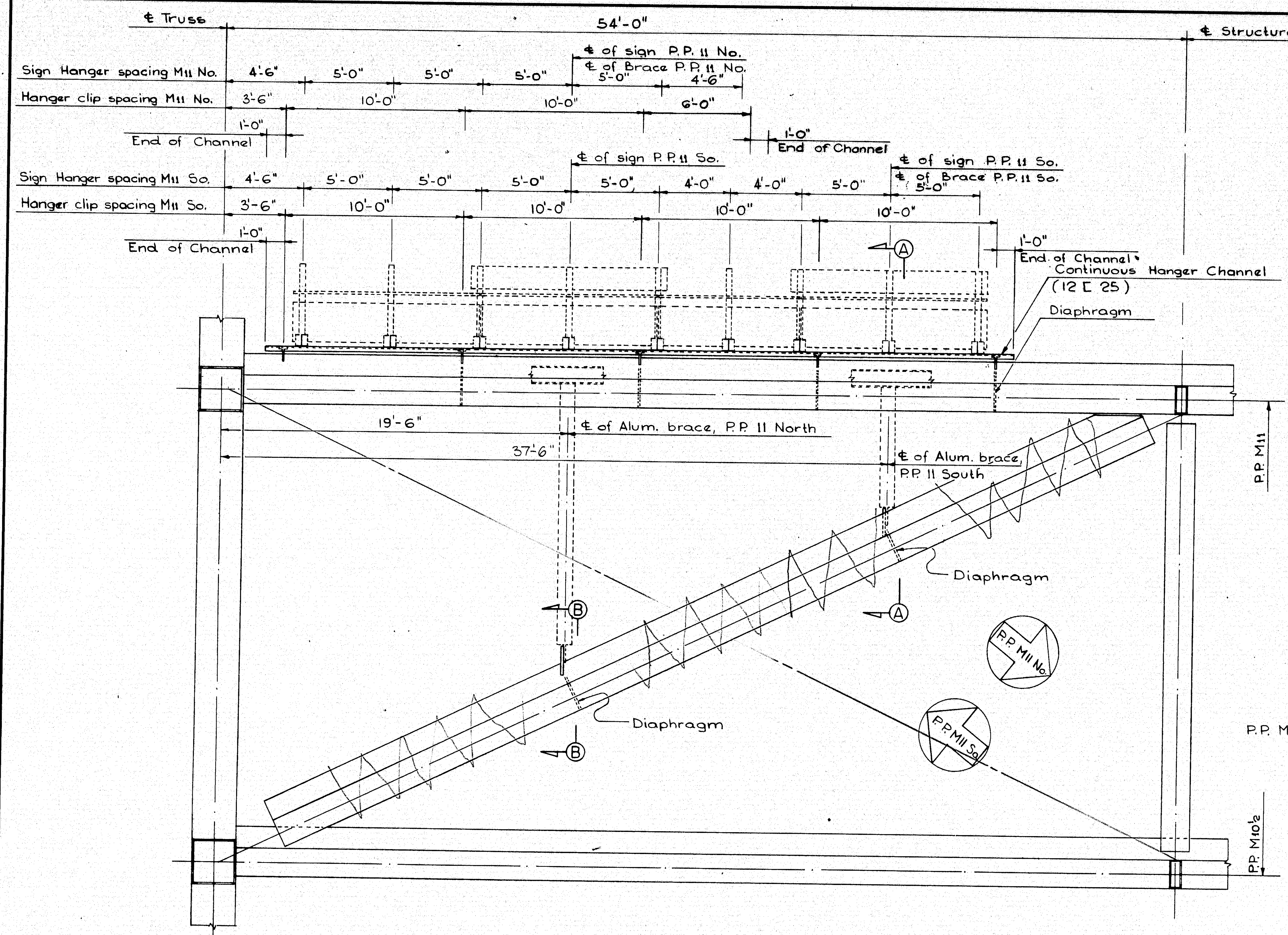

¢ Truss
54'-0"
¢ Structure
Sign Hanger spacing M11 No.
4'-6"
5'-0"
5'-0"
5'-0"
¢ of sign P.P. 11 No.
¢ of Brace P.P. 11 No.
5'-0"
4'-6"
Hanger clip spacing M11 No.
3'-6"
10'-0"
10'-0"
6'-0"
1'-0"
End of Channel
1'-0"
End of Channel
¢ of sign P.P. 11 So.
Sign Hanger spacing M11 So.
4'-6"
5'-0"
5'-0"
5'-0"
5'-0"
4'-0"
4'-0"
5'-0"
¢ of sign P.P. 11 So.
¢ of Brace P.P. 11 So.
5'-0"
Hanger clip spacing M11 So.
3'-6"
10'-0"
10'-0"
10'-0"
10'-0"
1'-0"
End of Channel
1'-0"
End of Channel
Continuous Hanger Channel
(12 [25)
Diaphragm
A
19'-6"
¢ of Alum. brace, P.P. 11 North
37'-6"
¢ of Alum. brace, P.P. 11 South
P.P. M11
Diaphragm
B
A
P.P. M11 No.
P.P. M11 So.
Diaphragm
B
P.P. M10½

PLAN
Scale ¼"= 1'-0"

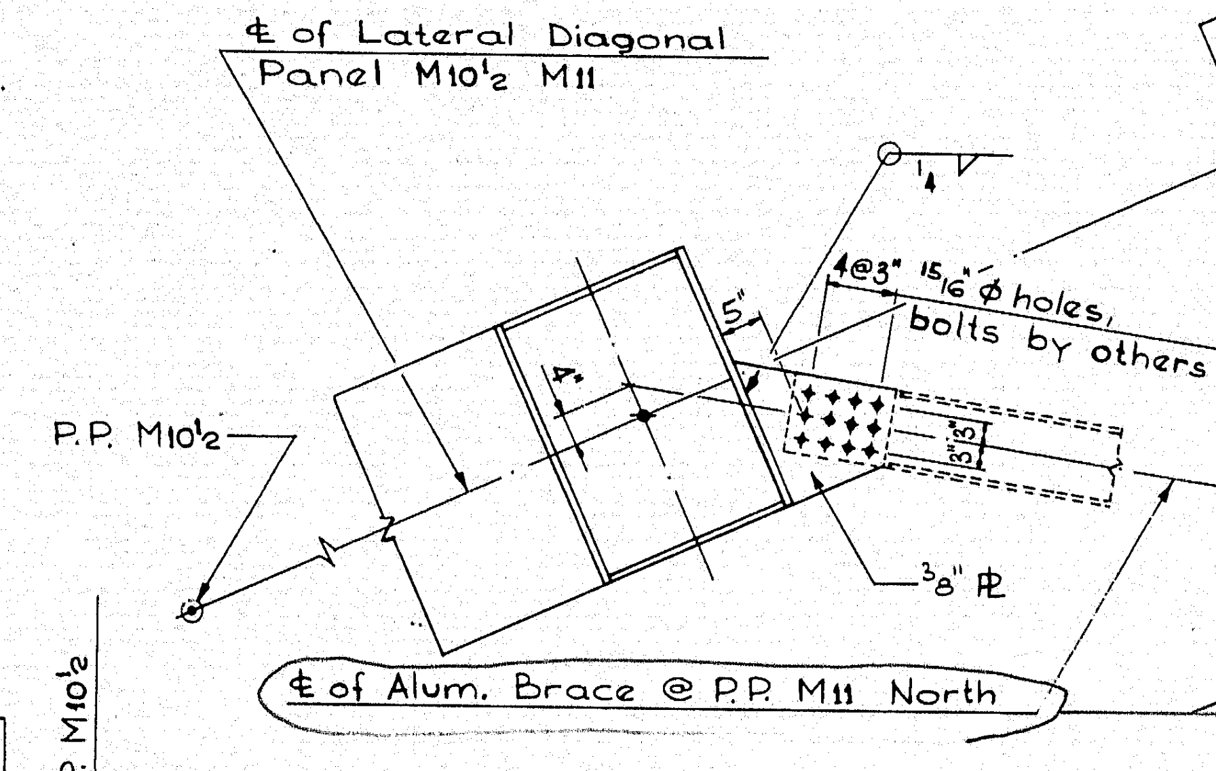

¢ of Lateral Diagonal
Panel M10½ M11
¼
4@3" 15/16" ⌀ holes,
bolts by others
5"
4"
3"
3"
P.P. M10½
3/8" ℞
¢ of Alum. Brace @ P.P. M11 North

SECTION B-B
Scale ½"= 1'-0"

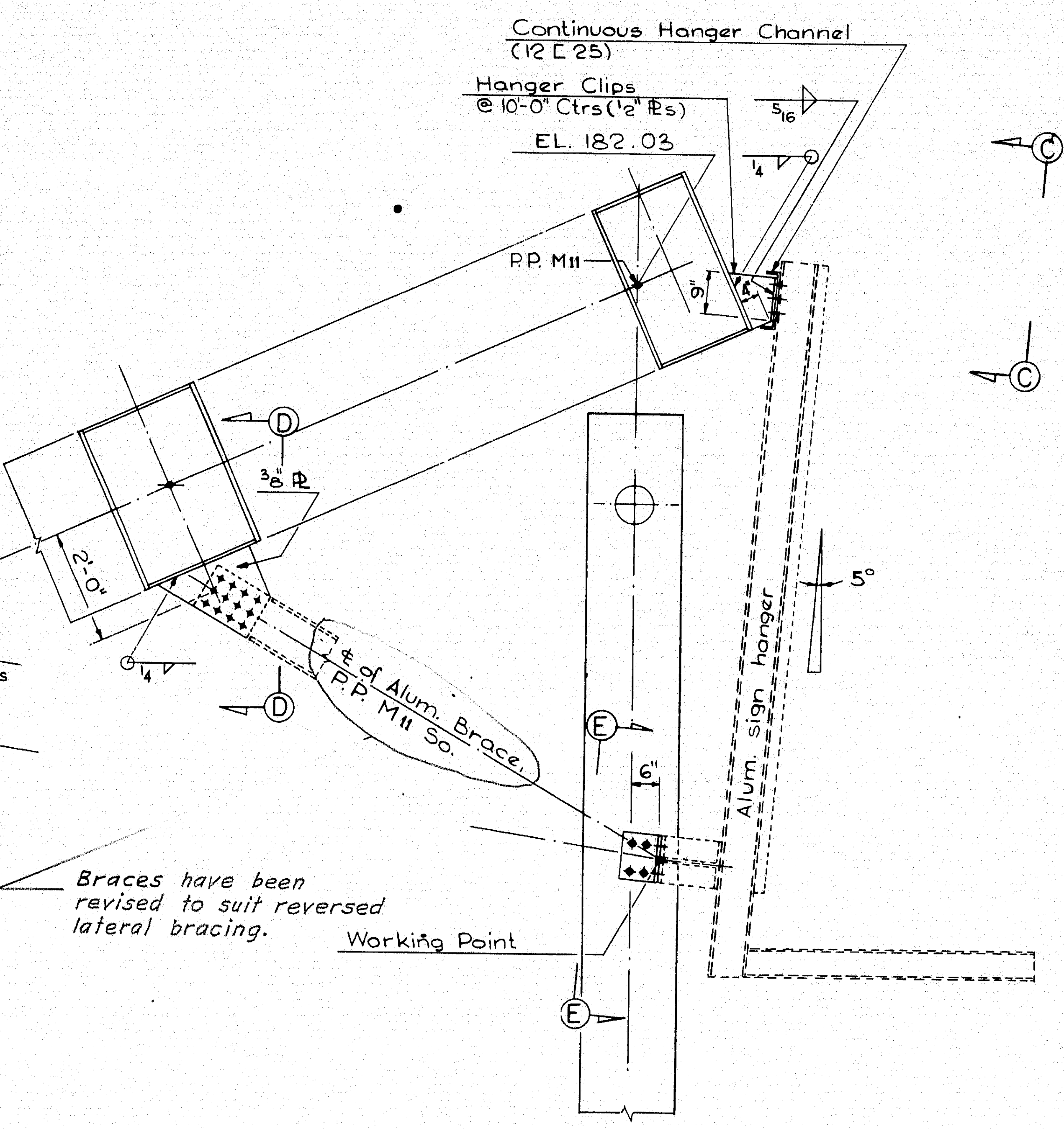

Continuous Hanger Channel
(12 [25)
Hanger Clips
@ 10'-0" Ctrs (½" ℞s)
EL. 182.03
5/16
¼
C
C
P.P. M11
9"
4"
D
3/8" ℞
2'-0"
¼
D
¢ of Alum. Brace,
P.P. M11 So.
5°
Alum. sign hanger
E
6"
Braces have been
revised to suit reversed
lateral bracing.
Working Point
E

SECTION A-A
Scale ½"= 1'-0"

NOTES:

Signs, sign hangers & braces by others.
All material A36 unless otherwise noted.
All bolts 7/8"⌀ A325 unless otherwise noted.

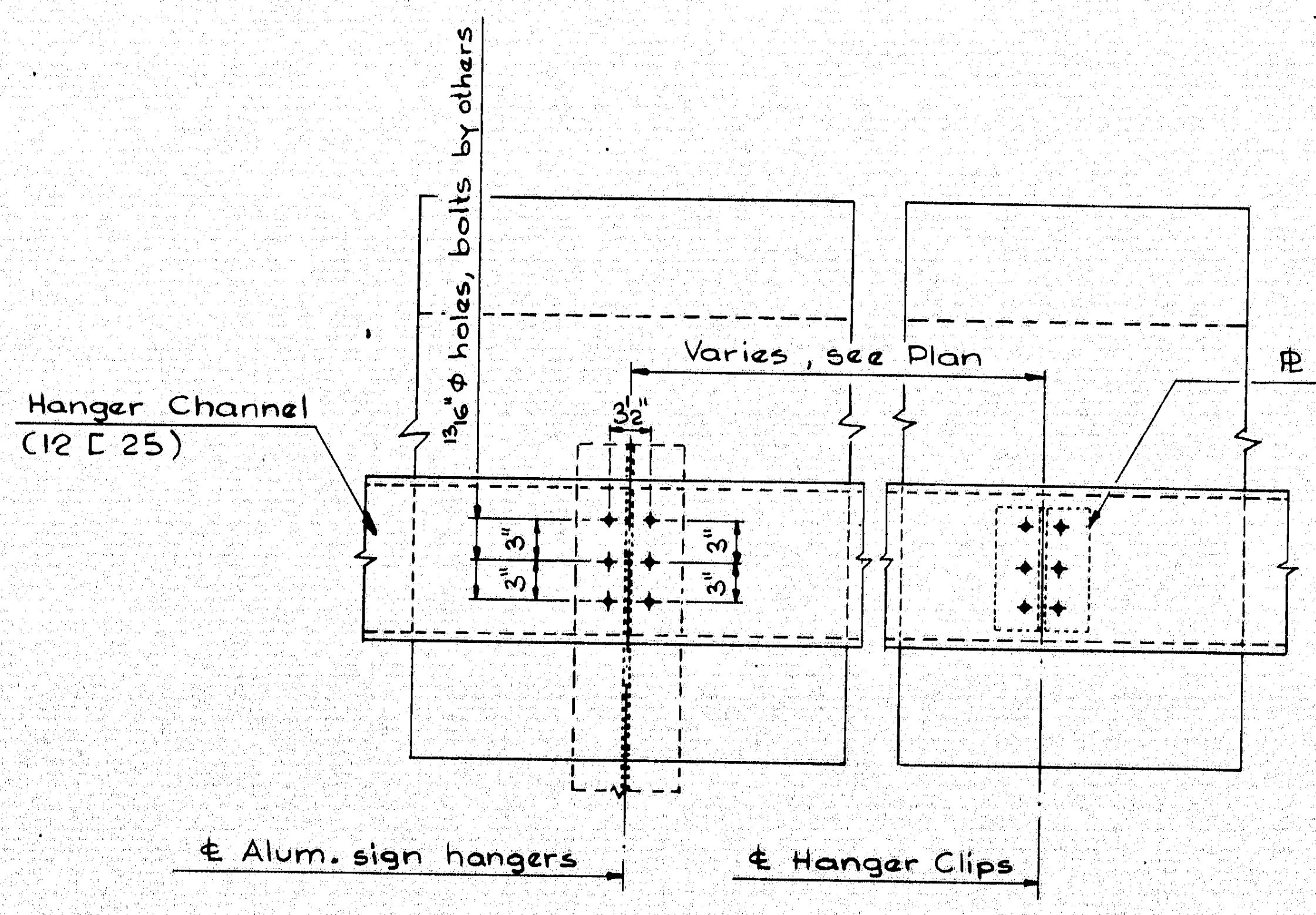

13/16"⌀ holes, bolts by others
Hanger Channel
(12 [25)
3½"
Varies, see Plan
℞ 7"×½"
3"
3"
3"
3"
¢ Alum. sign hangers
¢ Hanger Clips

SECTION C-C
Scale 1"= 1'-0"

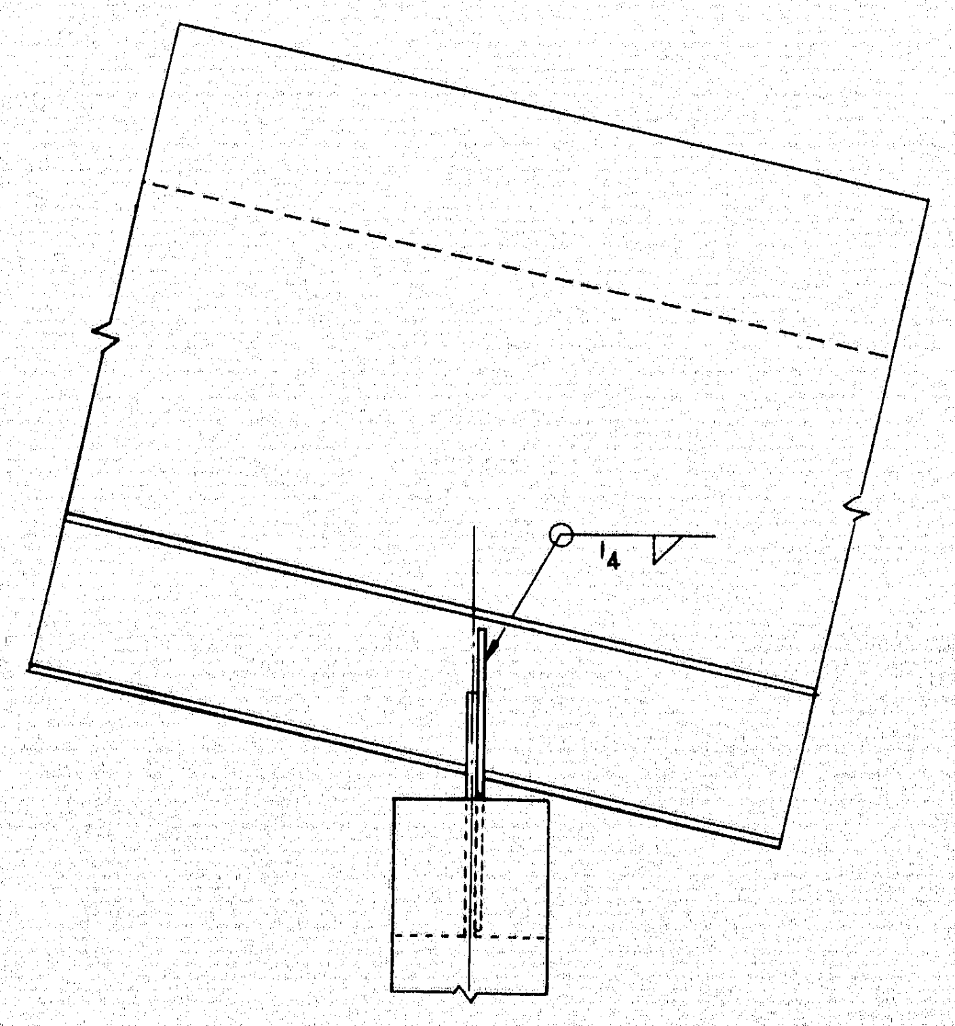

SECTION D-D
(Connection at North Brace Similar)
Scale 1"=1'-0"

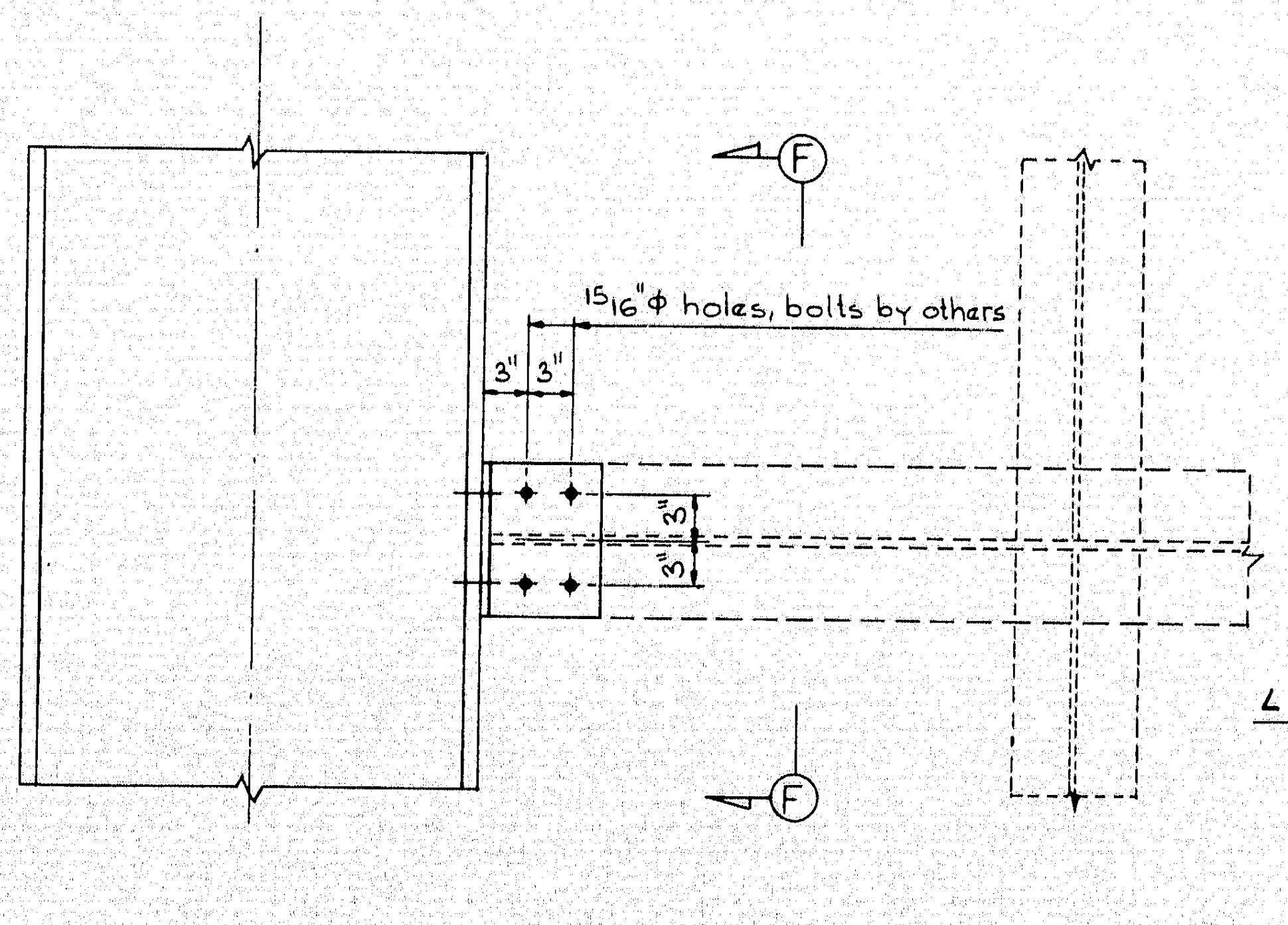

F
15/16"⌀ holes, bolts by others
3"
3"
3"
3"
F

SECTION E E
Scale 1"=1'-0"

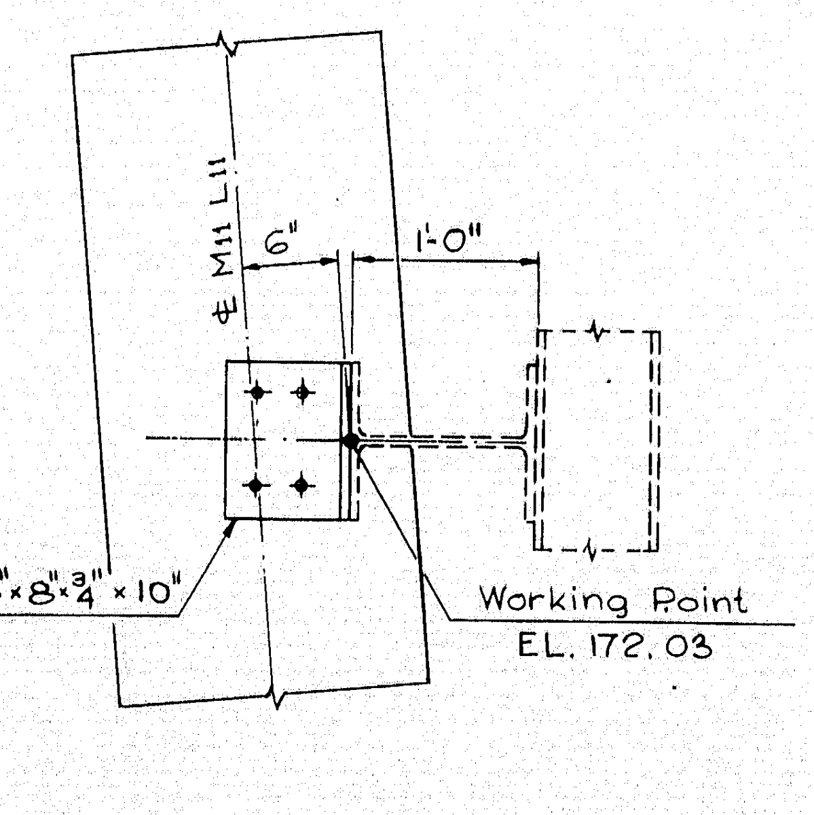

¢ M11 L11
6"
1'-0"
∠ 8"×8"×¾"×10"
Working Point
EL. 172.03

SECTION F-F
Scale 1"=1'-0"

AS BUILT
R. W. Christie 2/5/73

5

DESIGN — Thomas C. Thompson
TRACE — L. Vacao
CHECK — S. N. Liman

BRIDGE NO.
IN CHARGE OF — Richard W. Christie

NEW HAMPSHIRE
DEPARTMENT OF PUBLIC WORKS AND HIGHWAYS
AND
MAINE STATE HIGHWAY COMMISSION
INTERSTATE 95 BRIDGE
OVER
PISCATAQUA RIVER
BETWEEN
PORTSMOUTH, NEW HAMPSHIRE AND KITTERY, MAINE

SIGN SUPPORTS

SHEET 53 OF 54

HARDESTY & HANOVER
CONSULTING ENGINEERS
NEW YORK, N. Y.

129-149

B. P. R. REG. NO.	STATE	PROJECT NUMBER	SHEET NO.	TOTAL SHEETS
1	MAINE	I-95-1(22)16	54	54

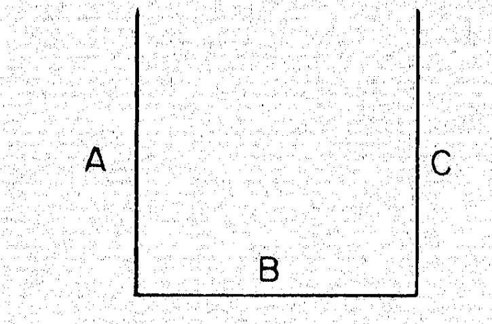

TYPE 1

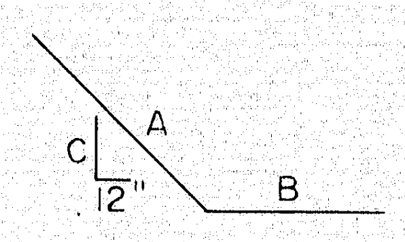

TYPE 2

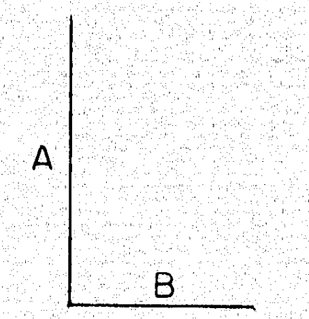

TYPE 3

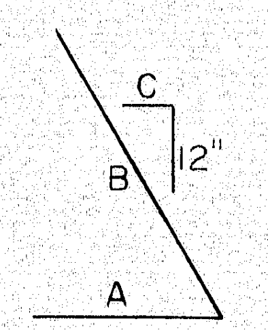

TYPE 4

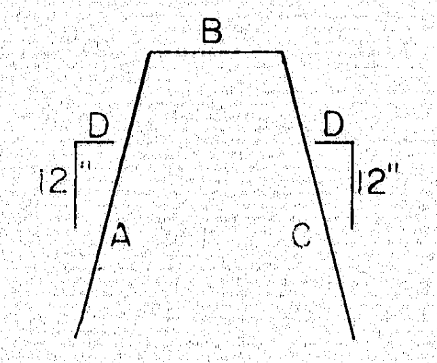

TYPE 5

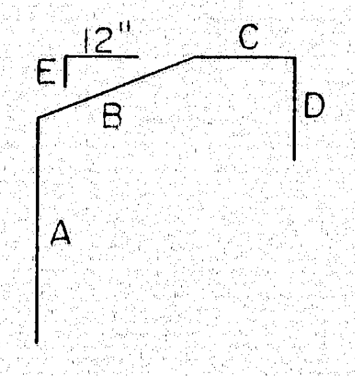

TYPE 6

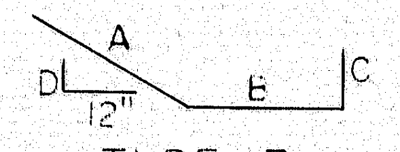

TYPE 7

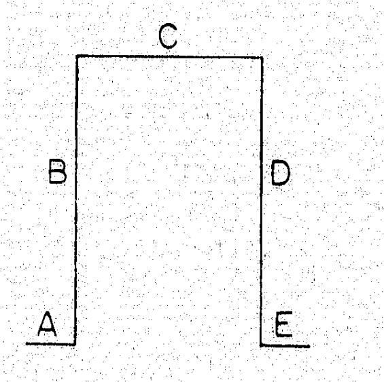

TYPE 8

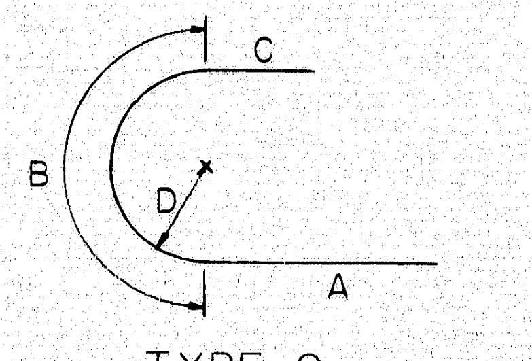

TYPE 9

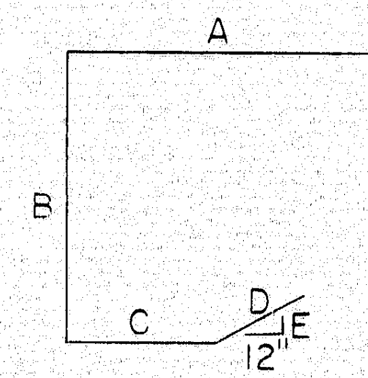

TYPE 10

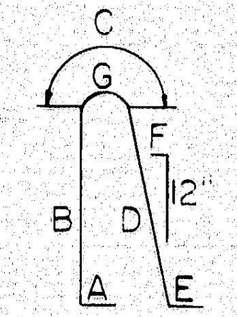

TYPE 11

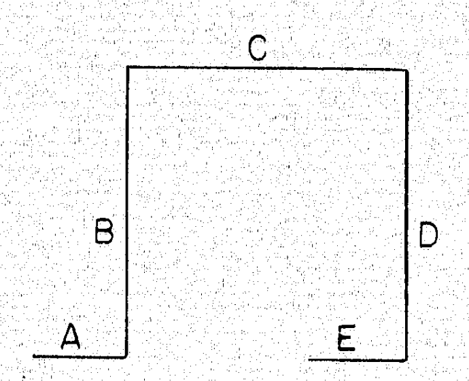

TYPE 12

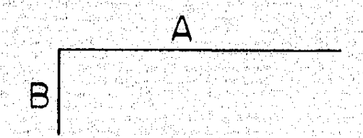

TYPE 13

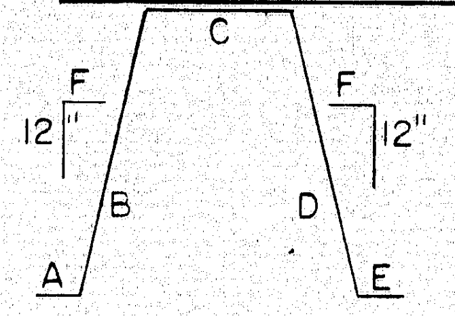

TYPE 14

RIVER BRIDGE DECK

Mark	Length	No. Reqd	Type	Detail Dimensions					
				A	B	C	D	E	F
	PANEL POINT 0 TO PANEL POINT 9								
SB400	8'-1	378	14	0'-4	3'-4	0'-11	3'-4	0'-4	1 1/4
SB401	4'-3	990	12	0'-4	1'-5	0'-11	1'-5	0'-4	
SB500	40'-9	822	STR						
SB501	45'-3	822	STR						
SB502	42'-10	822	STR						
XB500	13'-1	14	STR						
XB501	18'-6	70	STR						
XB502	16'-10	14	STR						
XB503	17'-8	28	STR						
XB504	19'-8	140	STR						
XB505	7'-8	28	STR						
SB600	53'-2	3012	STR						
	PANEL POINT 9 TO PANEL POINT 15'								
SA400	8'-1	340	14	0'-4	3'-4	0'-11	3'-4	0'-4	1 1/4
SA401	4'-3	914	12	0'-4	1'-5	0'-11	1'-5	0'-4	
SA500	41'-6	2192	STR						
SA501	40'-0	106	STR						
XA500	16'-2	168	STR						
XA501	8'-8	84	STR						
XA502	7'-4	14	STR						
XA503	18'-7	42	STR						
XA504	16'-10	14	STR						
SA600	53'-2	2672	STR						
	PANEL POINT 15' TO PANEL POINT 9'								
SA450	8'-1	258	14	0'-4	3'-4	0'-11	3'-4	0'-4	1 1/4
SA451	4'-3	696	12	0'-4	1'-5	0'-11	1'-5	0'-4	
SA550	41'-6	1644	STR						
XA550	16'-2	168	STR						
XA551	8'-8	84	STR						
SA650	53'-2	2016	STR						

RIVER BRIDGE DECK (CONT'D.)

Mark	Length	No. Reqd	Type	Detail Dimensions					
				A	B	C	D	E	F
		PANEL POINT 9' TO PANEL POINT 0'							
SB450	8'-1	378	14	0'-4	3'-4	0'-11	3'-4	0'-4	1 1/4
SB451	4'-3	990	12	0'-4	1'-5	0'-11	1'-5	0'-4	
SB550	40'-9	822	STR						
SB551	45'-3	822	STR						
SB552	42'-10	822	STR						
XB550	13'-1	14	STR						
XB551	18'-6	70	STR						
XB552	16'-10	14	STR						
XB553	17'-8	28	STR						
XB554	19'-8	140	STR						
XB555	7'-8	28	STR						
SB650	53'-2	3012	STR						
		LIGHTING POLE PLATFORMS							
LB400	4'-10	36	12	0'-4	1'-5	1'-8	1'-5	0'-4	
LB500	7'-8	36	5	2'-4	2'-0	2'-4	12		
LB600	6'-3	60	9	2'-9	0'-10	2'-9	0'-3		

NEW HAMPSHIRE APPROACH

Mark	Length	No. Reqd	Type	Detail Dimensions					
				A	B	C	D	E	F
SC400	7'-5	150	11	0'-4	3'-4	0'-4	3'-3	0'-4	1 1/4
SC401	4'-1	192	12	0'-4	1'-5	0'-11	1'-5	0'-4	
SC500	38'-6	548	STR						
WC501	18'-11	4	STR						
WC502	13'-5	2	STR						
WC503	21'-8	2	STR						
WC504	21'-0	2	STR						
WC505	19'-2	4	STR						
WC506	13'-7	2	STR						
MC507	21'-4	12	STR						
MC508	19'-0	24	STR						
MC509	13'-5	12	STR						
SC600	52'-0	298	13	51'-9	0'-4				
SC601	51'-8	298	STR						
			LIGHTING POLE PLATFORMS						
LB400	4'-10	6	12	0'-4	1'-5	1'-8	1'-5	0'-4	
LB500	7'-8	6	5	2'-4	2'-0	2'-4	12		
LB600	6'-3	10	9	2'-9	0'-10	2'-9	0'-3		

MAINE APPROACH

Mark	Length	No. Reqd	Type	Detail Dimensions					
				A	B	C	D	E	F
SC450	7'-5	152	11	0'-4	3'-4	0'-4	3'-3	0'-4	1 1/4
SC451	4'-1	194	12	0'-4	1'-5	0'-11	1'-5	0'-4	
SC550	38'-8	548	STR						
XC551	13'-7	16	STR						
XC552	19'-2	32	STR						
XC553	22'-3	16	STR						
SC650	52'-0	302	13	51'-9	0'-4				
SC651	51'-8	302	STR						
			LIGHTING POLE PLATFORMS						
LB400	4'-10	6	12	0'-4	1'-5	1'-8	1'-5	0'-4	
LB500	7'-8	6	5	2'-4	2'-0	2'-4	12		
LB600	6'-3	10	9	2'-9	0'-10	2'-9	0'-3		

For As-Built Bar Lists see Shop drawings.

AS BUILT
R.W. Christie 2/5/73

5

DESIGN – J. F.
TRACE – M. Beute
CHECK – D. D. Holderman

BRIDGE NO. IN CHARGE OF – Richard W. Christie

NEW HAMPSHIRE
DEPARTMENT OF PUBLIC WORKS AND HIGHWAYS
AND
MAINE STATE HIGHWAY COMMISSION
INTERSTATE 95 BRIDGE
OVER
PISCATAQUA RIVER
BETWEEN
PORTSMOUTH, NEW HAMPSHIRE AND KITTERY, MAINE

BAR LISTS

SHEET 54 OF 54

HARDESTY & HANOVER
CONSULTING ENGINEERS
NEW YORK, N. Y.

129-150

B. P. R. REG. NO.	STATE	PROJECT NUMBER	SHEET NO.	TOTAL SHEETS
1	MAINE			

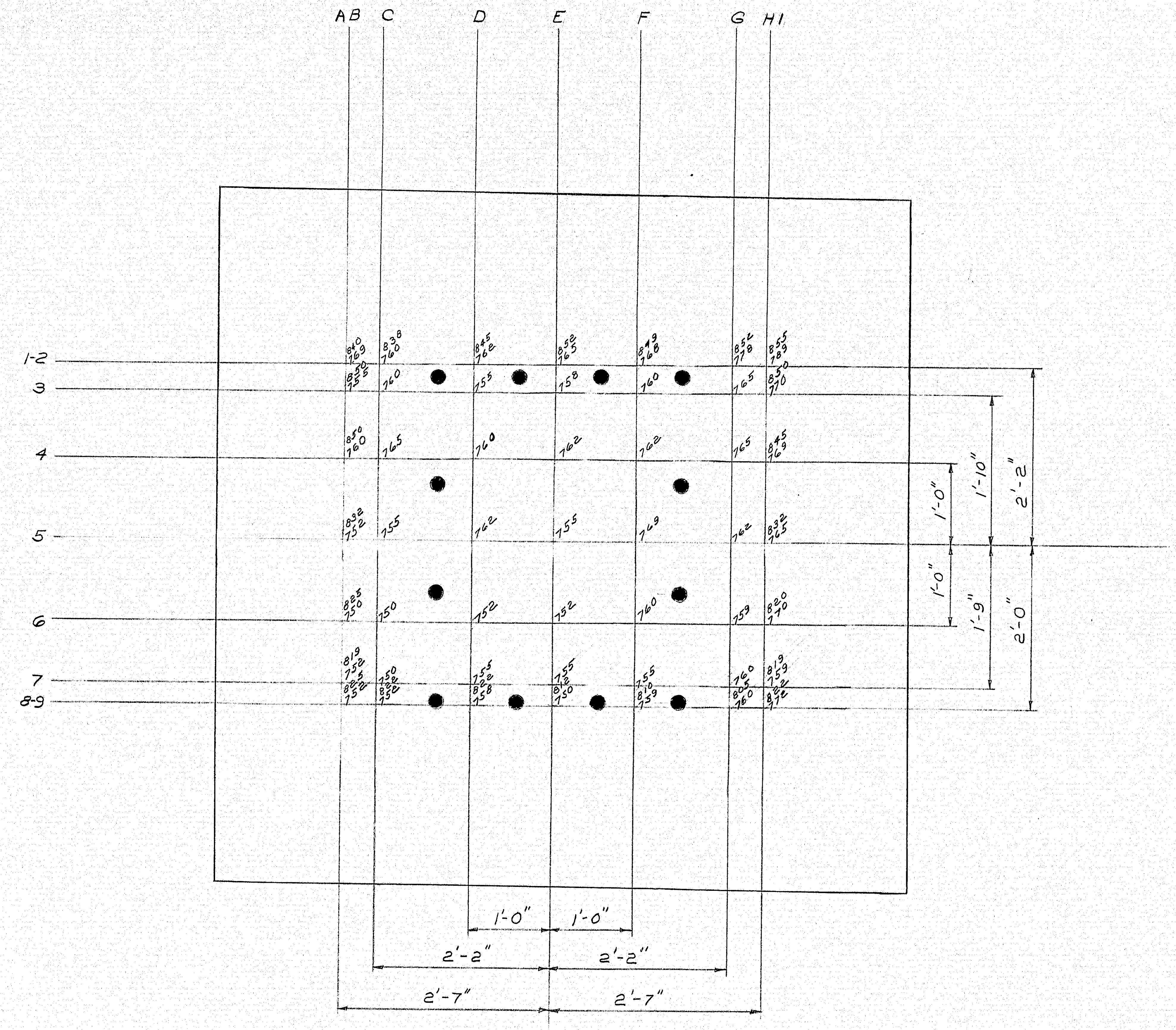

A B C D E F G H I
1-2
3
4
5
6
7
8-9
1'-0"
1'-10"
2'-2"
1'-0"
1'-9"
2'-0"
1'-0" 1'-0"
2'-2" 2'-2"
2'-7" 2'-7"

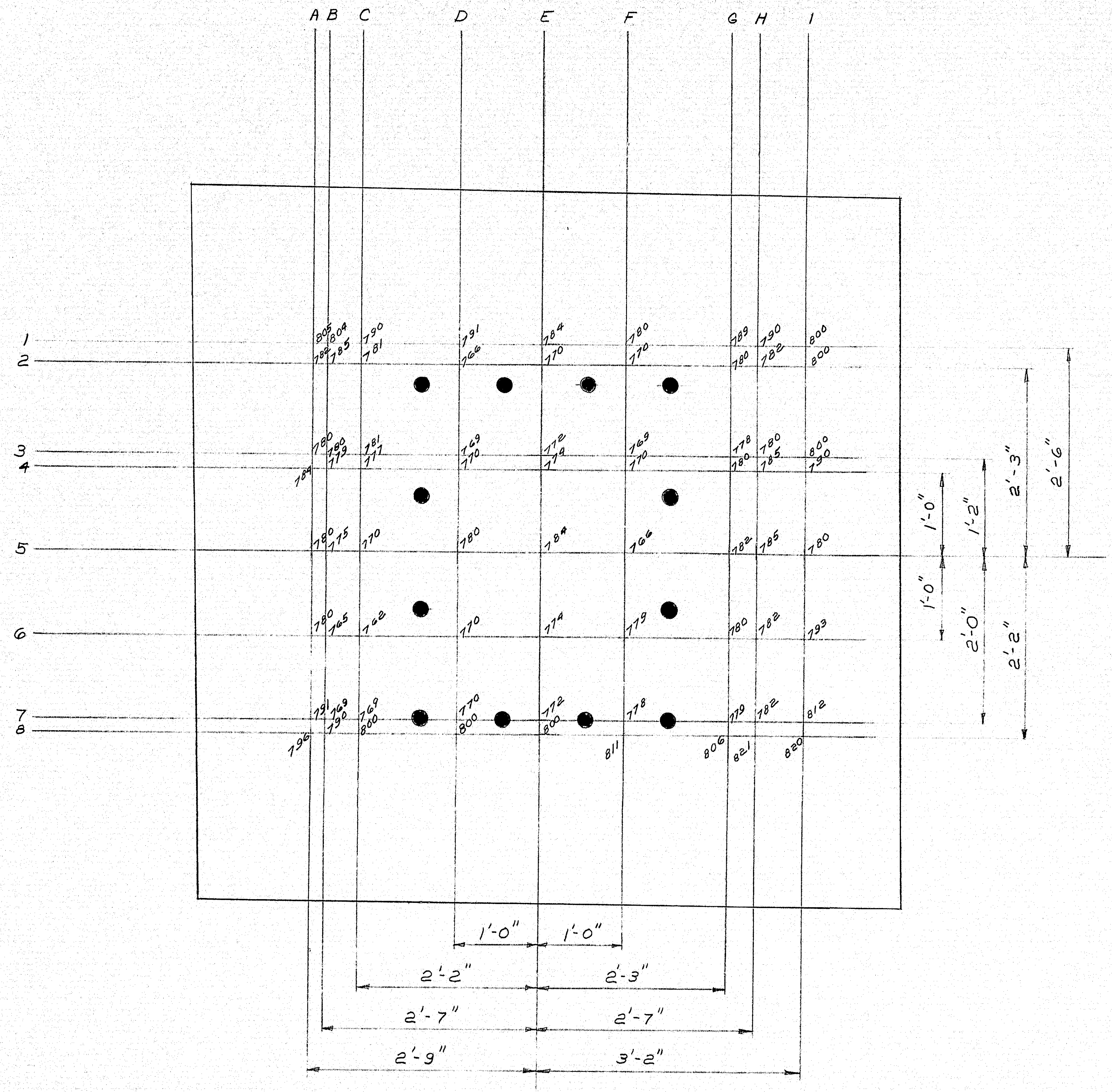

A B C D E F G H I
1
2
3
4
5
6
7
8
1'-0"
1'-2"
2'-3"
2'-6"
1'-0"
2'-0"
2'-2"
1'-0" 1'-0"
2'-2" 2'-3"
2'-7" 2'-7"
2'-9" 3'-2"

Scale 1"=1'-0"

North-East Anchor Pier

Average Rod Bushed Area = 4.760

North-West Anchor Pier

Average Rod Bushed Area = 4.775

DESIGN-
TRACE-
CHECK-

BRIDGE NO.
SURVEY-
PLOT- R. V. N.

NEW HAMPSHIRE
DEPARTMENT OF PUBLIC WORKS AND HIGHWAYS
AND
MAINE STATE HIGHWAY COMMISSION
INTERSTATE 95 BRIDGE
OVER
PISCATAQUA RIVER
BETWEEN
PORTSMOUTH, NEW HAMPSHIRE AND KITTERY, MAINE

RIVER PIER VERTICAL CHECK

SHEET 1 OF 4

129-151

B. P. R. REG. NO.	STATE	PROJECT NUMBER	SHEET NO.	TOTAL SHEETS
1	MAINE			

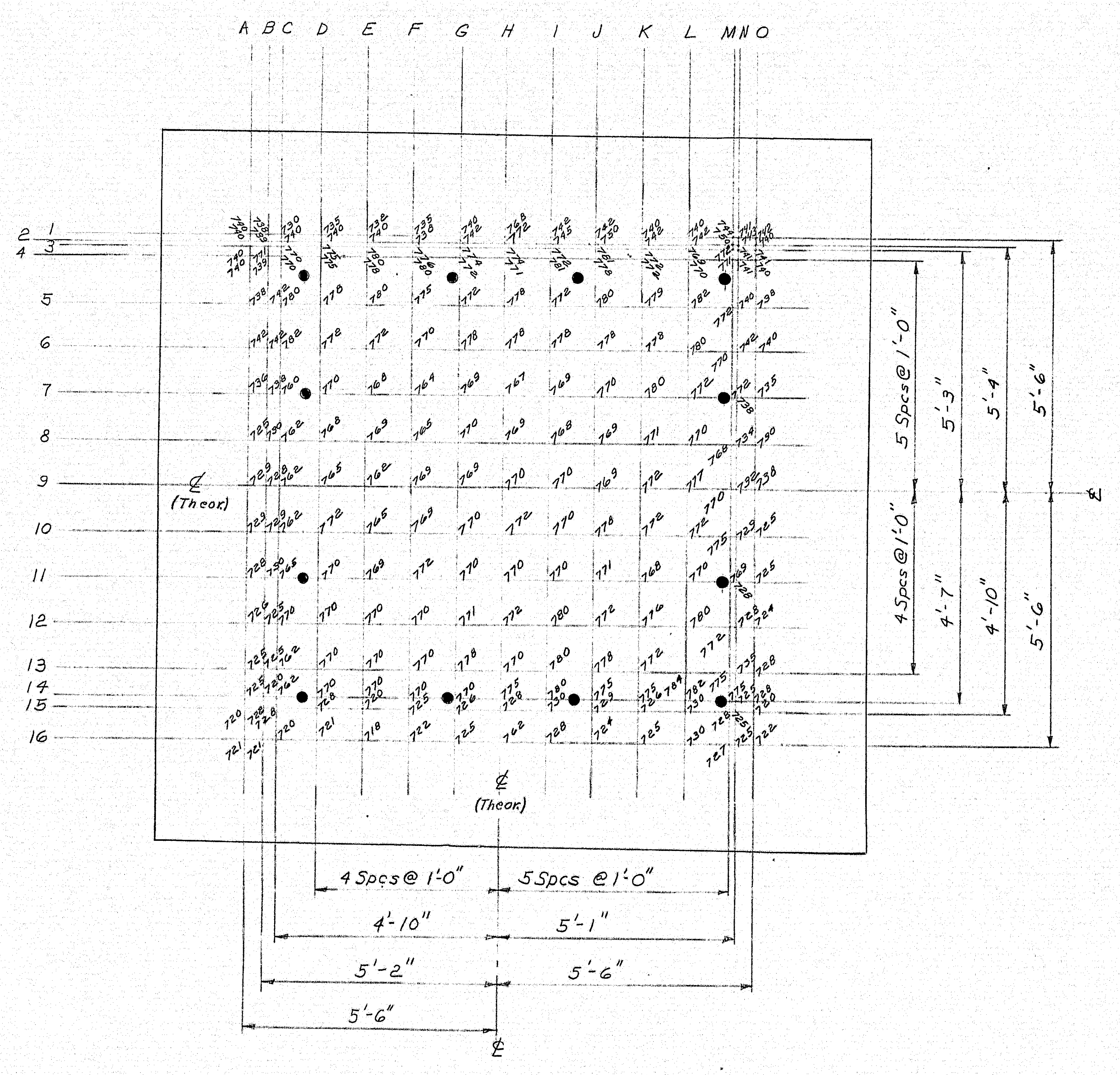

A B C D E F G H I J K L M N O
1 2 3 4 5 6 7 8 9 10 11 12 13 14 15 16
℄ (Theor.)
5 Spcs @ 1'-0"
5'-3"
5'-4"
5'-6"
4 Spcs @ 1'-0"
4'-7"
4'-10"
5'-6"
℄
4 Spcs @ 1'-0"
5 Spcs @ 1'-0"
4'-10"
5'-1"
5'-2"
5'-6"
5'-6"
℄

North-East Main Pier

Average Rod Bushed Area = 4.772

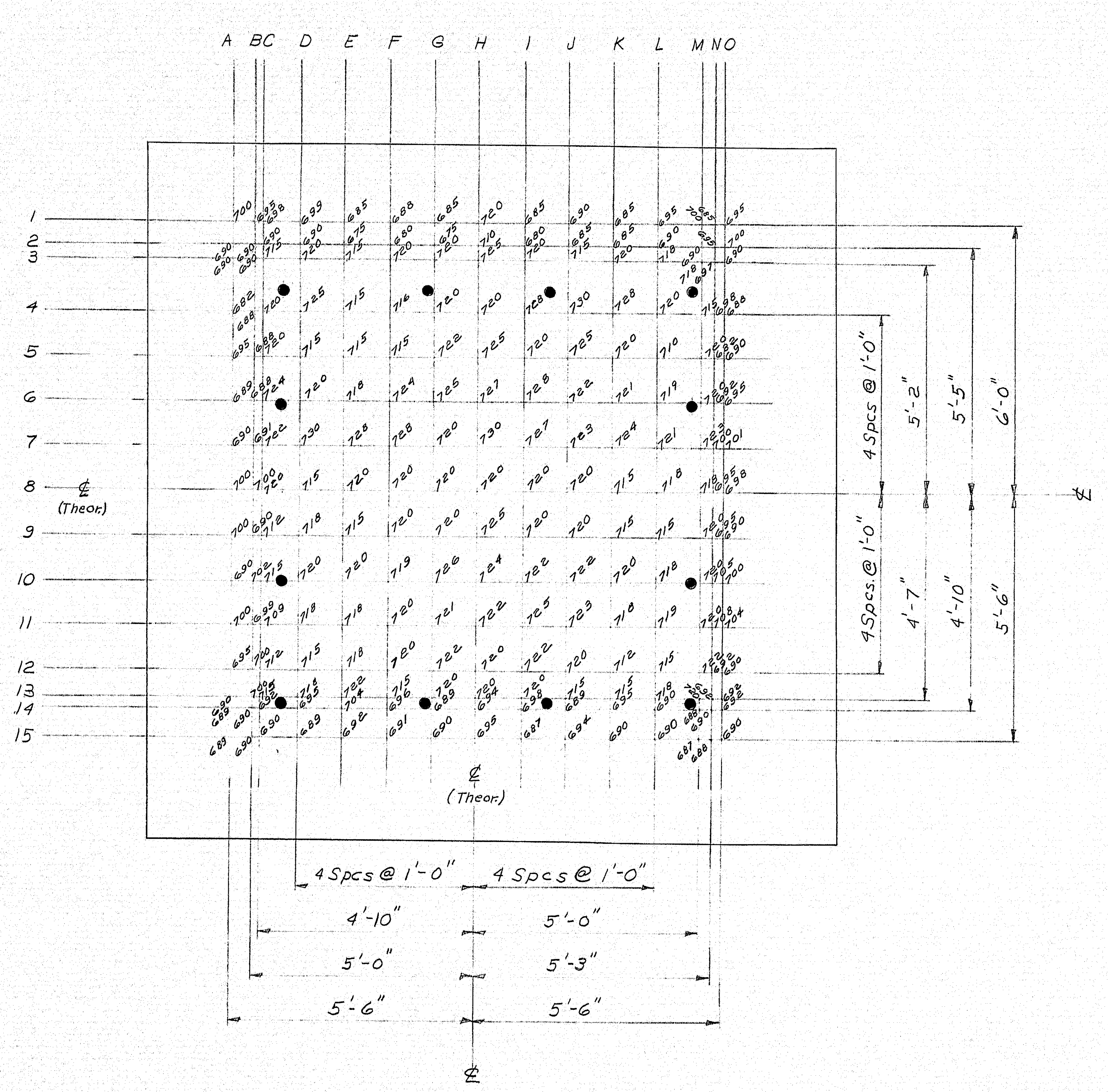

A B C D E F G H I J K L M N O
1 2 3 4 5 6 7 8 9 10 11 12 13 14 15
℄ (Theor.)
4 Spcs @ 1'-0"
5'-2"
5'-5"
6'-0"
4 Spcs @ 1'-0"
4'-7"
4'-10"
5'-6"
℄
4 Spcs @ 1'-0"
4 Spcs @ 1'-0"
4'-10"
5'-0"
5'-0"
5'-3"
5'-6"
5'-6"
℄

North-West Main Pier

Average Rod Bushed Area = 4.720

Scale 1/2" = 1'-0"

DESIGN-
TRACE-
CHECK-

BRIDGE NO.
SURVEY-
PLOT- R. V. N.

NEW HAMPSHIRE
DEPARTMENT OF PUBLIC WORKS AND HIGHWAYS
AND
MAINE STATE HIGHWAY COMMISSION
INTERSTATE 95 BRIDGE
OVER
PISCATAQUA RIVER
BETWEEN
PORTSMOUTH, NEW HAMPSHIRE AND KITTERY, MAINE

RIVER PIER VERTICAL CHECK

SHEET 2 OF 4

129-152